This international standard was developed in accordance with internationally recognized principles on standardization established in the Decision on Principles for the Development of International Standards, Guides and Recommendations issued by the World Trade Organization Technical Barriers to Trade (TBT) Committee.

Designation: A370 – 20

Standard Test Methods and Definitions for Mechanical Testing of Steel Products[1]

This standard is issued under the fixed designation A370; the number immediately following the designation indicates the year of original adoption or, in the case of revision, the year of last revision. A number in parentheses indicates the year of last reapproval. A superscript epsilon (ε) indicates an editorial change since the last revision or reapproval.

This standard has been approved for use by agencies of the U.S. Department of Defense.

1. Scope*

1.1 These test methods[2] cover procedures and definitions for the mechanical testing of steels, stainless steels, and related alloys. The various mechanical tests herein described are used to determine properties required in the product specifications. Variations in testing methods are to be avoided, and standard methods of testing are to be followed to obtain reproducible and comparable results. In those cases in which the testing requirements for certain products are unique or at variance with these general procedures, the product specification testing requirements shall control.

1.2 The following mechanical tests are described:

	Sections
Tension	7 to 14
Bend	15
Hardness	16
Brinell	17
Rockwell	18
Portable	19
Impact	20 to 30
Keywords	32

1.3 Annexes covering details peculiar to certain products are appended to these test methods as follows:

	Annex
Bar Products	Annex A1
Tubular Products	Annex A2
Fasteners	Annex A3
Round Wire Products	Annex A4
Significance of Notched-Bar Impact Testing	Annex A5
Converting Percentage Elongation of Round Specimens to Equivalents for Flat Specimens	Annex A6
Testing Multi-Wire Strand	Annex A7
Rounding of Test Data	Annex A8
Methods for Testing Steel Reinforcing Bars	Annex A9
Procedure for Use and Control of Heat-cycle Simulation	Annex A10

1.4 The values stated in inch-pound units are to be regarded as standard. The values given in parentheses are mathematical conversions to SI units that are provided for information only and are not considered standard.

1.5 When these test methods are referenced in a metric product specification, the yield and tensile values may be determined in inch-pound (ksi) units then converted into SI (MPa) units. The elongation determined in inch-pound gauge lengths of 2 or 8 in. may be reported in SI unit gauge lengths of 50 or 200 mm, respectively, as applicable. Conversely, when these test methods are referenced in an inch-pound product specification, the yield and tensile values may be determined in SI units then converted into inch-pound units. The elongation determined in SI unit gauge lengths of 50 or 200 mm may be reported in inch-pound gauge lengths of 2 or 8 in., respectively, as applicable.

1.5.1 The specimen used to determine the original units must conform to the applicable tolerances of the original unit system given in the dimension table not that of the converted tolerance dimensions.

NOTE 1—This is due to the specimen SI dimensions and tolerances being hard conversions when this is not a dual standard. The user is directed to Test Methods A1058 if the tests are required in SI units.

1.6 Attention is directed to ISO/IEC 17025 when there may be a need for information on criteria for evaluation of testing laboratories.

1.7 *This standard does not purport to address all of the safety concerns, if any, associated with its use. It is the responsibility of the user of this standard to establish appropriate safety, health, and environmental practices and determine the applicability of regulatory limitations prior to use.*

1.8 *This international standard was developed in accordance with internationally recognized principles on standardization established in the Decision on Principles for the Development of International Standards, Guides and Recommendations issued by the World Trade Organization Technical Barriers to Trade (TBT) Committee.*

[1] These test methods and definitions are under the jurisdiction of ASTM Committee A01 on Steel, Stainless Steel and Related Alloys and are the direct responsibility of Subcommittee A01.13 on Mechanical and Chemical Testing and Processing Methods of Steel Products and Processes.

Current edition approved Aug. 1, 2020. Published September 2020. Originally approved in 1953. Last previous edition approved in 2019 as A370 – 19ε1. DOI: 10.1520/A0370-20

[2] For *ASME Boiler and Pressure Vessel Code* applications see related Specification SA-370 in Section II of that Code.

***A Summary of Changes section appears at the end of this standard**

Copyright © ASTM International, 100 Barr Harbor Drive, PO Box C700, West Conshohocken, PA 19428-2959. United States

2. Referenced Documents

2.1 *ASTM Standards:*[3]

A623 Specification for Tin Mill Products, General Requirements

A623M Specification for Tin Mill Products, General Requirements [Metric]

A833 Test Method for Indentation Hardness of Metallic Materials by Comparison Hardness Testers

A941 Terminology Relating to Steel, Stainless Steel, Related Alloys, and Ferroalloys

A956/A956M Test Method for Leeb Hardness Testing of Steel Products

A1038 Test Method for Portable Hardness Testing by the Ultrasonic Contact Impedance Method

A1058 Test Methods for Mechanical Testing of Steel Products—Metric

A1061/A1061M Test Methods for Testing Multi-Wire Steel Prestressing Strand

E4 Practices for Force Verification of Testing Machines

E6 Terminology Relating to Methods of Mechanical Testing

E8/E8M Test Methods for Tension Testing of Metallic Materials

E10 Test Method for Brinell Hardness of Metallic Materials

E18 Test Methods for Rockwell Hardness of Metallic Materials

E23 Test Methods for Notched Bar Impact Testing of Metallic Materials

E29 Practice for Using Significant Digits in Test Data to Determine Conformance with Specifications

E83 Practice for Verification and Classification of Extensometer Systems

E110 Test Method for Rockwell and Brinell Hardness of Metallic Materials by Portable Hardness Testers

E190 Test Method for Guided Bend Test for Ductility of Welds

E290 Test Methods for Bend Testing of Material for Ductility

2.2 *ASME Document:*[4]

ASME Boiler and Pressure Vessel Code, Section VIII, Division I, Part UG-8

2.3 *ISO Standard:*[5]

ISO/IEC 17025 General Requirements for the Competence of Testing and Calibration Laboratories

3. Terminology

3.1 *Definitions:*

3.1.1 For definitions of terms pertaining to mechanical testing of steel products not otherwise listed in this section, reference should be made to Terminology E6 and Terminology A941.

3.2 *Definitions of Terms Specific to This Standard:*

3.2.1 *longitudinal test, n*—unless specifically defined otherwise, signifies that the lengthwise axis of the specimen is parallel to the direction of the greatest extension of the steel during rolling or forging.

3.2.1.1 *Discussion*—The stress applied to a longitudinal tension test specimen is in the direction of the greatest extension, and the axis of the fold of a longitudinal bend test specimen is at right angles to the direction of greatest extension (see Fig. 1, Fig. 2a, and Fig. 2b).

3.2.2 *radial test, n*—unless specifically defined otherwise, signifies that the lengthwise axis of the specimen is perpendicular to the axis of the product and coincident with one of the radii of a circle drawn with a point on the axis of the product as a center (see Fig. 2a).

3.2.3 *tangential test, n*—unless specifically defined otherwise, signifies that the lengthwise axis of the specimen perpendicular to a plane containing the axis of the product and tangent to a circle drawn with a point on the axis of the productas a center (see Fig. 2a, Fig. 2b, Fig. 2c, and Fig. 2d).

3.2.4 *transition temperature, n*—for specification purposes, the transition temperature is the temperature at which the designated material test value equals or exceeds a specified minimum test value.

3.2.4.1 *Discussion*—Some of the many definitions of transition temperature currently being used are: *(1)* the lowest temperature at which the specimen exhibits 100 % fibrous fracture, *(2)* the temperature where the fracture shows a 50 % crystalline and a 50 % fibrous appearance, *(3)* the temperature corresponding to the energy value 50 % of the difference

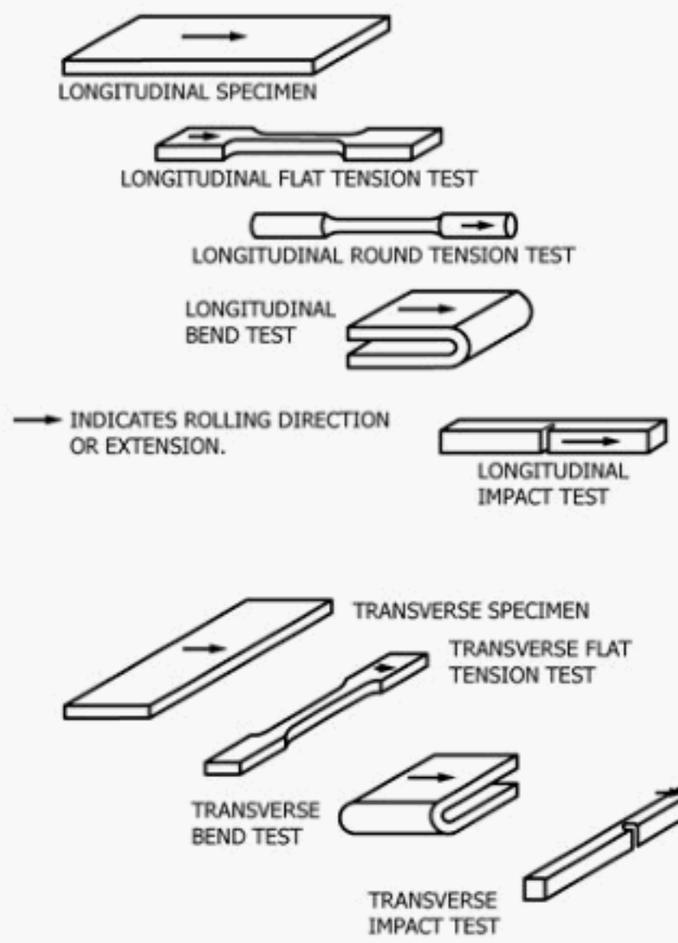

FIG. 1 Relation of Test Coupons and Test Specimens to Rolling Direction or Extension (Applicable to General Wrought Products)

[3] For referenced ASTM standards, visit the ASTM website, www.astm.org, or contact ASTM Customer Service at service@astm.org. For *Annual Book of ASTM Standards* volume information, refer to the standard's Document Summary page on the ASTM website.

[4] Available from American Society of Mechanical Engineers (ASME), ASME International Headquarters, Two Park Ave., New York, NY 10016-5990, http://www.asme.org.

[5] Available from International Organization for Standardization (ISO), ISO Central Secretariat, BIBC II, Chemin de Blandonnet 8, CP 401, 1214 Vernier, Geneva, Switzerland, http://www.iso.org.

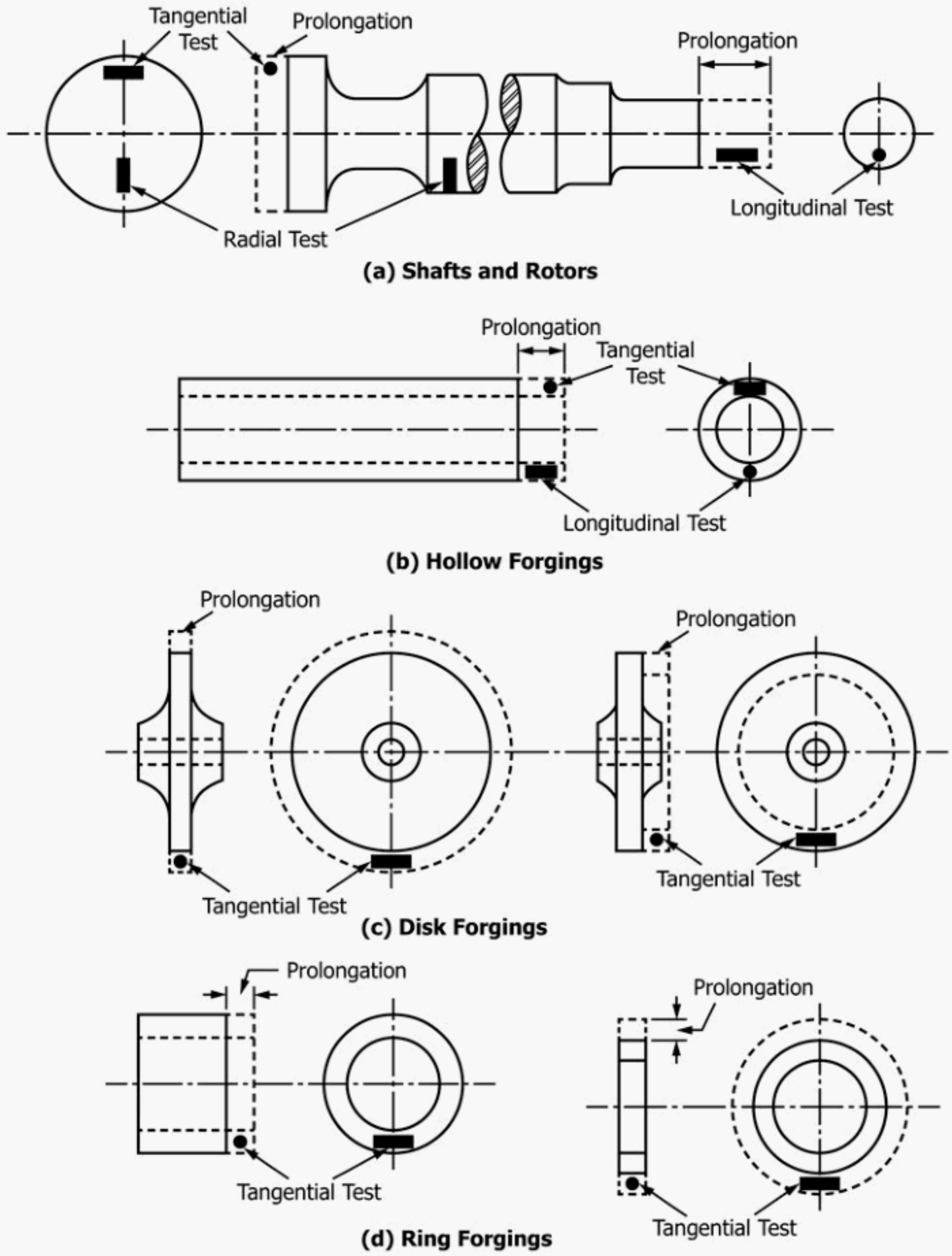

FIG. 2 Location of Longitudinal Tension Test Specimens in Rings Cut From Tubular Products

between values obtained at 100 and 0 % fibrous fracture, and *(4)* the temperature corresponding to a specific energy value.

3.2.5 *transverse test, n*—unless specifically defined otherwise, signifies that the lengthwise axis of the specimen is right angles to the direction of the greatest extension of the steel during rolling or forging.

3.2.5.1 *Discussion*—The stress applied to a transverse tension test specimen is at right angles to the greatest extension, and the axis of the fold of a transverse bend test specimen is parallel to the greatest extension (see Fig. 1).

3.3 *Definition of Terms Specific to the Procedure for Use and Control of Heat-cycle Simulation (See Annex A9):*

3.3.1 *master chart, n*—a record of the heat treatment received from a forging essentially identical to the production forgings that it will represent.

3.3.1.1 *Discussion*—It is a chart of time and temperature showing the output from thermocouples imbedded in the forging at the designated test immersion and test location or locations.

3.3.2 *program chart, n*—the metallized sheet used to program the simulator unit.

3.3.2.1 *Discussion*—Time-temperature data from the master chart are manually transferred to the program chart.

3.3.3 *simulator chart, n*—a record of the heat treatment that a test specimen had received in the simulator unit.

3.3.3.1 *Discussion*—It is a chart of time and temperature and can be compared directly to the master chart for accuracy of duplication.

3.3.4 *simulator cycle, n*—one continuous heat treatment of a set of specimens in the simulator unit.

3.3.4.1 *Discussion*—The cycle includes heating from ambient, holding at temperature, and cooling. For example, a simulated austenitize and quench of a set of specimens would be one cycle; a simulated temper of the same specimens would be another cycle.

4. Significance and Use

4.1 The primary use of these test methods is testing to determine the specified mechanical properties of steel, stainless steel, and related alloy products for the evaluation of conformance of such products to a material specification under the jurisdiction of ASTM Committee A01 and its subcommittees as designated by a purchaser in a purchase order or contract.

4.1.1 These test methods may be and are used by other ASTM Committees and other standards writing bodies for the purpose of conformance testing.

4.1.2 The material condition at the time of testing, sampling frequency, specimen location and orientation, reporting requirements, and other test parameters are contained in the pertinent material specification or in a general requirement specification for the particular product form.

4.1.3 Some material specifications require the use of additional test methods not described herein; in such cases, the required test method is described in that material specification or by reference to another appropriate test method standard.

4.2 These test methods are also suitable to be used for testing of steel, stainless steel and related alloy materials for other purposes, such as incoming material acceptance testing by the purchaser or evaluation of components after service exposure.

4.2.1 As with any mechanical testing, deviations from either specification limits or expected as-manufactured properties can occur for valid reasons besides deficiency of the original as-fabricated product. These reasons include, but are not limited to: subsequent service degradation from environmental exposure (for example, temperature, corrosion); static or cyclic service stress effects, mechanically-induced damage, material inhomogeneity, anisotropic structure, natural aging of select alloys, further processing not included in the specification, sampling limitations, and measuring equipment calibration uncertainty. There is statistical variation in all aspects of mechanical testing and variations in test results from prior tests are expected. An understanding of possible reasons for deviation from specified or expected test values should be applied in interpretation of test results.

5. General Precautions

5.1 Certain methods of fabrication, such as bending, forming, and welding, or operations involving heating, may affect the properties of the material under test. Therefore, the product specifications cover the stage of manufacture at which mechanical testing is to be performed. The properties shown by testing prior to fabrication may not necessarily be representative of the product after it has been completely fabricated.

5.2 Improperly machined specimens should be discarded and other specimens substituted.

5.3 Flaws in the specimen may also affect results. If any test specimen develops flaws, the retest provision of the applicable product specification shall govern.

5.4 If any test specimen fails because of mechanical reasons such as failure of testing equipment or improper specimen preparation, it may be discarded and another specimen taken.

6. Orientation of Test Specimens

6.1 The terms "longitudinal test" and "transverse test" are used only in material specifications for wrought products and are not applicable to castings. When such reference is made to a test coupon or test specimen, see Section 3 for terms and definitions.

TENSION TEST

7. Description

7.1 The tension test related to the mechanical testing of steel products subjects a machined or full-section specimen of the material under examination to a measured load sufficient to cause rupture. The resulting properties sought are defined in Terminology E6.

7.2 In general, the testing equipment and methods are given in Test Methods E8/E8M. However, there are certain exceptions to Test Methods E8/E8M practices in the testing of steel, and these are covered in these test methods.

8. Testing Apparatus and Operations

8.1 *Loading Systems*—There are two general types of loading systems, mechanical (screw power) and hydraulic. These differ chiefly in the variability of the rate of load application. The older screw power machines are limited to a small number of fixed free running crosshead speeds. Some modern screw power machines, and all hydraulic machines permit stepless variation throughout the range of speeds.

8.2 The tension testing machine shall be maintained in good operating condition, used only in the proper loading range, and calibrated periodically in accordance with the latest revision of Practices E4.

NOTE 2—Many machines are equipped with stress-strain recorders for autographic plotting of stress-strain curves. It should be noted that some recorders have a load measuring component entirely separate from the load indicator of the testing machine. Such recorders are calibrated separately.

8.3 *Loading*—It is the function of the gripping or holding device of the testing machine to transmit the load from the heads of the machine to the specimen under test. The essential requirement is that the load shall be transmitted axially. This implies that the centers of the action of the grips shall be in alignment, insofar as practicable, with the axis of the specimen at the beginning and during the test and that bending or twisting be held to a minimum. For specimens with a reduced section, gripping of the specimen shall be restricted to the grip section. In the case of certain sections tested in full size, nonaxial loading is unavoidable and in such cases shall be permissible.

8.4 *Speed of Testing*—The speed of testing shall not be greater than that at which load and strain readings can be made accurately. In production testing, speed of testing is commonly expressed: (*1*) in terms of free running crosshead speed (rate of movement of the crosshead of the testing machine when not under load), (*2*) in terms of rate of separation of the two heads of the testing machine under load, (*3*) in terms of rate of stressing the specimen, or (*4*) in terms of rate of straining the specimen. The following limitations on the speed of testing are recommended as adequate for most steel products:

NOTE 3—Tension tests using closed-loop machines (with feedback control of rate) should not be performed using load control, as this mode of testing will result in acceleration of the crosshead upon yielding and elevation of the measured yield strength.

8.4.1 Any convenient speed of testing may be used up to one half the specified yield point or yield strength. When this point is reached, the free-running rate of separation of the crossheads shall be adjusted so as not to exceed 1⁄16 in. per min per inch of reduced section, or the distance between the grips for test specimens not having reduced sections. This speed shall be maintained through the yield point or yield strength. In determining the tensile strength, the free-running rate of separation of the heads shall not exceed ½ in. per min per inch of reduced section, or the distance between the grips for test specimens not having reduced sections. In any event, the minimum speed of testing shall not be less than 1⁄10 the specified maximum rates for determining yield point or yield strength and tensile strength.

8.4.2 It shall be permissible to set the speed of the testing machine by adjusting the free running crosshead speed to the above specified values, inasmuch as the rate of separation of heads under load at these machine settings is less than the specified values of free running crosshead speed.

8.4.3 As an alternative, if the machine is equipped with a device to indicate the rate of loading, the speed of the machine from half the specified yield point or yield strength through the yield point or yield strength may be adjusted so that the rate of stressing does not exceed 100 000 psi (690 MPa)/min. However, the minimum rate of stressing shall not be less than 10 000 psi (70 MPa)/min.

9. Test Specimen Parameters

9.1 *Selection*—Test coupons shall be selected in accordance with the applicable product specifications.

9.1.1 *Wrought Steels*—Wrought steel products are usually tested in the longitudinal direction, but in some cases, where size permits and the service justifies it, testing is in the transverse, radial, or tangential directions (see Figs. 1 and 2).

9.1.2 *Forged Steels*—For open die forgings, the metal for tension testing is usually provided by allowing extensions or prolongations on one or both ends of the forgings, either on all or a representative number as provided by the applicable product specifications. Test specimens are normally taken at mid-radius. Certain product specifications permit the use of a representative bar or the destruction of a production part for test purposes. For ring or disk-like forgings test metal is provided by increasing the diameter, thickness, or length of the forging. Upset disk or ring forgings, which are worked or extended by forging in a direction perpendicular to the axis of the forging, usually have their principal extension along concentric circles and for such forgings tangential tension specimens are obtained from extra metal on the periphery or end of the forging. For some forgings, such as rotors, radial tension tests are required. In such cases the specimens are cut or trepanned from specified locations.

9.2 *Size and Tolerances*—Test specimens shall be (*1*) the full cross section of material, or (*2*) machined to the form and dimensions shown in Figs. 3-6. The selection of size and type of specimen is prescribed by the applicable product specification. Full cross section specimens shall be tested in 8-in. (200 mm) gauge length unless otherwise specified in the product specification.

9.3 *Procurement of Test Specimens*—Specimens shall be extracted by any convenient method taking care to remove all distorted, cold-worked, or heat-affected areas from the edges of the section used in evaluating the material. Specimens usually have a reduced cross section at mid-length to ensure uniform distribution of the stress over the cross section and localize the zone of fracture.

9.4 *Aging of Test Specimens*—Unless otherwise specified, it shall be permissible to age tension test specimens. The time-temperature cycle employed must be such that the effects of previous processing will not be materially changed. It may be accomplished by aging at room temperature 24 to 48 h, or in shorter time at moderately elevated temperatures by boiling in water, heating in oil or in an oven.

9.5 *Measurement of Dimensions of Test Specimens:*

9.5.1 *Standard Rectangular Tension Test Specimens*—These forms of specimens are shown in Fig. 3. To determine the cross-sectional area, the center width dimension shall be measured to the nearest 0.005 in. (0.13 mm) for the 8-in. (200 mm) gauge length specimen and 0.001 in. (0.025 mm) for the 2-in. (50 mm) gauge length specimen in Fig. 3. The center thickness dimension shall be measured to the nearest 0.001 in. for both specimens.

9.5.2 *Standard Round Tension Test Specimens*—These forms of specimens are shown in Fig. 4 and Fig. 5. To determine the cross-sectional area, the diameter shall be

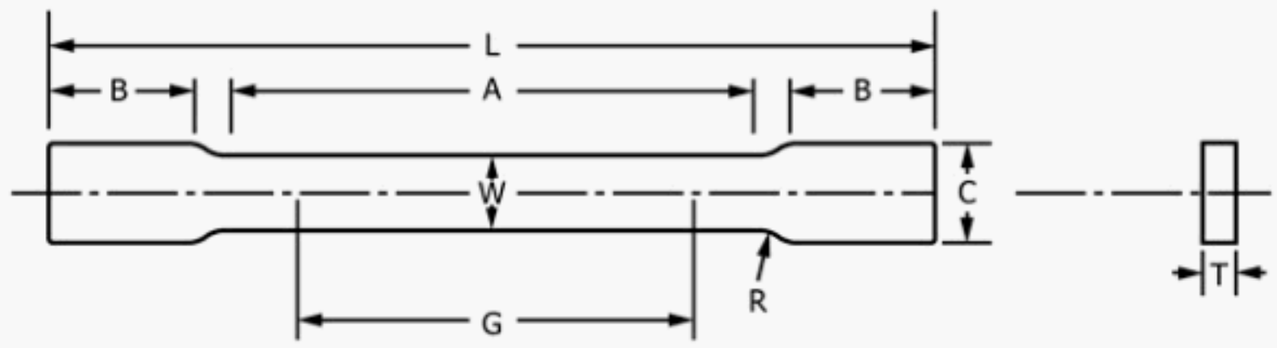

DIMENSIONS

	Standard Specimens						Subsize Specimen	
	Plate-type, 1½-in. (40 mm) Wide							
	8-in. (200 mm) Gauge Length		2-in. (50 mm) Gauge Length		Sheet-type, ½ in. (12.5 mm) Wide		¼-in. (6 mm) Wide	
	in.	mm	in.	mm	in.	mm	in.	mm
G—Gauge length (Notes 1 and 2)	8.00 ± 0.01	200 ± 0.25	2.000 ± 0.005	50.0 ± 0.10	2.000 ± 0.005	50.0 ± 0.10	1.000 ± 0.003	25.0 ± 0.08
W—Width (Notes 3, 5, and 6)	1½ + ⅛ −¼	40 + 3 −6	1½ + ⅛ − ¼	40 + 3 −6	0.500 ± 0.010	12.5 ± 0.25	0.250 ± 0.002	6.25 ± 0.05
T—Thickness (Note 7)	Thickness of Material							
R—Radius of fillet, min (Note 4)	½	13	½	13	½	13	¼	6
L—Overall length, min (Notes 2 and 8)	18	450	8	200	8	200	4	100
A—Length of reduced section, min	9	225	2¼	60	2¼	60	1¼	32
B—Length of grip section, min (Note 9)	3	75	2	50	2	50	1¼	32
C—Width of grip section, approximate (Note 4, Note 10, and Note 11)	2	50	2	50	¾	20	⅜	10

NOTE 1—For the 1½-in. (40 mm) wide specimens, punch marks for measuring elongation after fracture shall be made on the flat or on the edge of the specimen and within the reduced section. For the 8-in. (200 mm) gauge length specimen, a set of nine or more punch marks 1 in. (25 mm) apart, or one or more pairs of punch marks 8 in. (200 mm) apart may be used. For the 2-in. (50 mm) gauge length specimen, a set of three or more punch marks 1 in. (25 mm) apart, or one or more pairs of punch marks 2 in. (50 mm) apart may be used.

NOTE 2—For the ½-in. (12.5 mm) wide specimen, punch marks for measuring the elongation after fracture shall be made on the flat or on the edge of the specimen and within the reduced section. Either a set of three or more punch marks 1 in. (25 mm) apart or one or more pairs of punch marks 2 in. (50 mm) apart may be used.

NOTE 3—For the four sizes of specimens, the ends of the reduced section shall not differ in width by more than 0.004, 0.004, 0.002, or 0.001 in. (0.10, 0.10, 0.05, or 0.025 mm), respectively. Also, there may be a gradual decrease in width from the ends to the center, but the width at either end shall not be more than 0.015 in., 0.015 in., 0.005 in., or 0.003 in. (0.40, 0.40, 0.10, or 0.08 mm), respectively, larger than the width at the center.

NOTE 4—For each specimen type, the radii of all fillets shall be equal to each other with a tolerance of 0.05 in. (1.25 mm), and the centers of curvature of the two fillets at a particular end shall be located across from each other (on a line perpendicular to the centerline) within a tolerance of 0.10 in. (2.5 mm).

NOTE 5—For each of the four sizes of specimens, narrower widths (*W* and *C*) may be used when necessary. In such cases, the width of the reduced section should be as large as the width of the material being tested permits; however, unless stated specifically, the requirements for elongation in a product specification shall not apply when these narrower specimens are used. If the width of the material is less than *W*, the sides may be parallel throughout the length of the specimen.

NOTE 6—The specimen may be modified by making the sides parallel throughout the length of the specimen, the width and tolerances being the same as those specified above. When necessary, a narrower specimen may be used, in which case the width should be as great as the width of the material being tested permits. If the width is 1½ in. (38 mm) or less, the sides may be parallel throughout the length of the specimen.

NOTE 7—The dimension *T* is the thickness of the test specimen as provided for in the applicable product specification. Minimum nominal thickness of 1 to 1½-in. (40 mm) wide specimens shall be 3⁄16 in. (5 mm), except as permitted by the product specification. Maximum nominal thickness of ½-in. (12.5 mm) and ¼-in. (6 mm) wide specimens shall be 1 in. (25 mm) and ¼ in. (6 mm), respectively.

NOTE 8—To aid in obtaining axial loading during testing of ¼-in. (6 mm) wide specimens, the overall length should be as large as the material will permit.

NOTE 9—It is desirable, if possible, to make the length of the grip section large enough to allow the specimen to extend into the grips a distance equal to two thirds or more of the length of the grips. If the thickness of ½-in. (13 mm) wide specimens is over ⅜ in. (10 mm), longer grips and correspondingly longer grip sections of the specimen may be necessary to prevent failure in the grip section.

NOTE 10—For standard sheet-type specimens and subsize specimens, the ends of the specimen shall be symmetrical with the center line of the reduced section within 0.01 and 0.005 in. (0.25 and 0.13 mm), respectively, except that for steel if the ends of the ½-in. (12.5 mm) wide specimen are symmetrical within 0.05 in. (1.0 mm), a specimen may be considered satisfactory for all but referee testing.

NOTE 11—For standard plate-type specimens, the ends of the specimen shall be symmetrical with the center line of the reduced section within 0.25 in. (6.35 mm), except for referee testing in which case the ends of the specimen shall be symmetrical with the center line of the reduced section within 0.10 in. (2.5 mm).

FIG. 3 Rectangular Tension Test Specimens

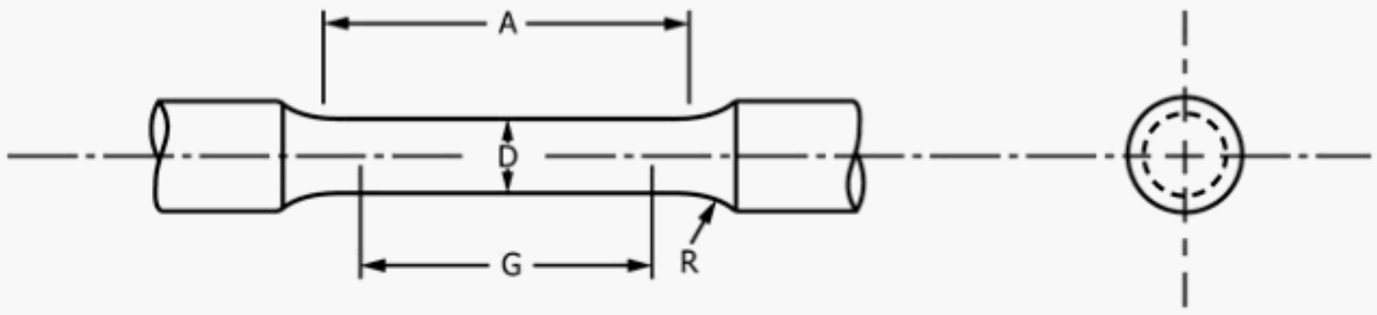

DIMENSIONS

Nominal Diameter	Standard Specimen		Small-size Specimens Proportional to Standard							
	in.	mm	in.	mm	in.	mm	in.	mm	in.	mm
	0.500	12.5	0.350	8.75	0.250	6.25	0.160	4.00	0.113	2.50
G—Gauge length	2.00± 0.005	50.0 ± 0.10	1.400± 0.005	35.0 ± 0.10	1.000± 0.005	25.0 ± 0.10	0.640± 0.005	16.0 ± 0.10	0.450± 0.005	10.0 ± 0.10
D—Diameter (Note 1)	0.500± 0.010	12.5± 0.25	0.350± 0.007	8.75 ± 0.18	0.250± 0.005	6.25 ± 0.12	0.160± 0.003	4.00 ± 0.08	0.113± 0.002	2.50 ± 0.05
R—Radius of fillet, min	3/8	10	1/4	6	3/16	5	5/32	4	3/32	2
A—Length of reduced section, min (Note 2)	2 1/4	60	1 3/4	45	1 1/4	32	3/4	20	5/8	16

NOTE 1—The reduced section may have a gradual taper from the ends toward the center, with the ends not more than 1 % larger in diameter than the center (controlling dimension).

NOTE 2—If desired, the length of the reduced section may be increased to accommodate an extensometer of any convenient gauge length. Reference marks for the measurement of elongation should, nevertheless, be spaced at the indicated gauge length.

NOTE 3—The gauge length and fillets shall be as shown, but the ends may be of any form to fit the holders of the testing machine in such a way that the load shall be axial (see Fig. 9). If the ends are to be held in wedge grips it is desirable, if possible, to make the length of the grip section great enough to allow the specimen to extend into the grips a distance equal to two thirds or more of the length of the grips.

NOTE 4—On the round specimens in Fig. 5 and Fig. 6, the gauge lengths are equal to four times the nominal diameter. In some product specifications other specimens may be provided for, but unless the 4-to-1 ratio is maintained within dimensional tolerances, the elongation values may not be comparable with those obtained from the standard test specimen.

NOTE 5—The use of specimens smaller than 0.250-in. (6.25 mm) diameter shall be restricted to cases when the material to be tested is of insufficient size to obtain larger specimens or when all parties agree to their use for acceptance testing. Smaller specimens require suitable equipment and greater skill in both machining and testing.

NOTE 6—Five sizes of specimens often used have diameters of approximately 0.505, 0.357, 0.252, 0.160, and 0.113 in., the reason being to permit easy calculations of stress from loads, since the corresponding cross sectional areas are equal or close to 0.200, 0.100, 0.0500, 0.0200, and 0.0100 in.^{2}, respectively. Thus, when the actual diameters agree with these values, the stresses (or strengths) may be computed using the simple multiplying factors 5, 10, 20, 50, and 100, respectively. (The metric equivalents of these fixed diameters do not result in correspondingly convenient cross sectional area and multiplying factors.)

FIG. 4 Standard 0.500-in. (12.5 mm) Round Tension Test Specimen With 2-in. (50 mm) Gauge Length and Examples of Small-size Specimens Proportional to Standard Specimens

measured at the center of the gauge length to the nearest 0.001 in. (0.025 mm) (see Table 1).

9.6 *General*—Test specimens shall be either substantially full size or machined, as prescribed in the product specifications for the material being tested.

9.6.1 It is desirable to have the cross-sectional area of the specimen smallest at the center of the gauge length to ensure fracture within the gauge length. This is provided for by the taper in the gauge length permitted for each of the specimens described in the following sections.

9.6.2 For brittle materials it is desirable to have fillets of large radius at the ends of the gauge length.

10. Plate-type Specimens

10.1 The standard plate-type test specimens are shown in Fig. 3. Such specimens are used for testing metallic materials in the form of plate, structural and bar-size shapes, and flat material having a nominal thickness of 3/16 in. (5 mm) or over. When product specifications so permit, other types of specimens may be used.

NOTE 4—When called for in the product specification, the 8-in. (200 mm) gauge length specimen of Fig. 3 may be used for sheet and strip material.

11. Sheet-type Specimen

11.1 The standard sheet-type test specimen is shown in Fig. 3. This specimen is used for testing metallic materials in the form of sheet, plate, flat wire, strip, band, and hoop ranging in nominal thickness from 0.005 to 1 in. (0.13 to 25 mm). When product specifications so permit, other types of specimens may be used, as provided in Section 10 (see Note 4).

12. Round Specimens

12.1 The standard 0.500-in. (12.5 mm) diameter round test specimen shown in Fig. 4 is frequently used for testing metallic materials.

12.2 Fig. 4 also shows small size specimens proportional to the standard specimen. These may be used when it is necessary to test material from which the standard specimen or specimens shown in Fig. 3 cannot be prepared. Other sizes of small round specimens may be used. In any such small size specimen it is important that the gauge length for measurement of elongation be four times the diameter of the specimen (see Note 5, Fig. 4).

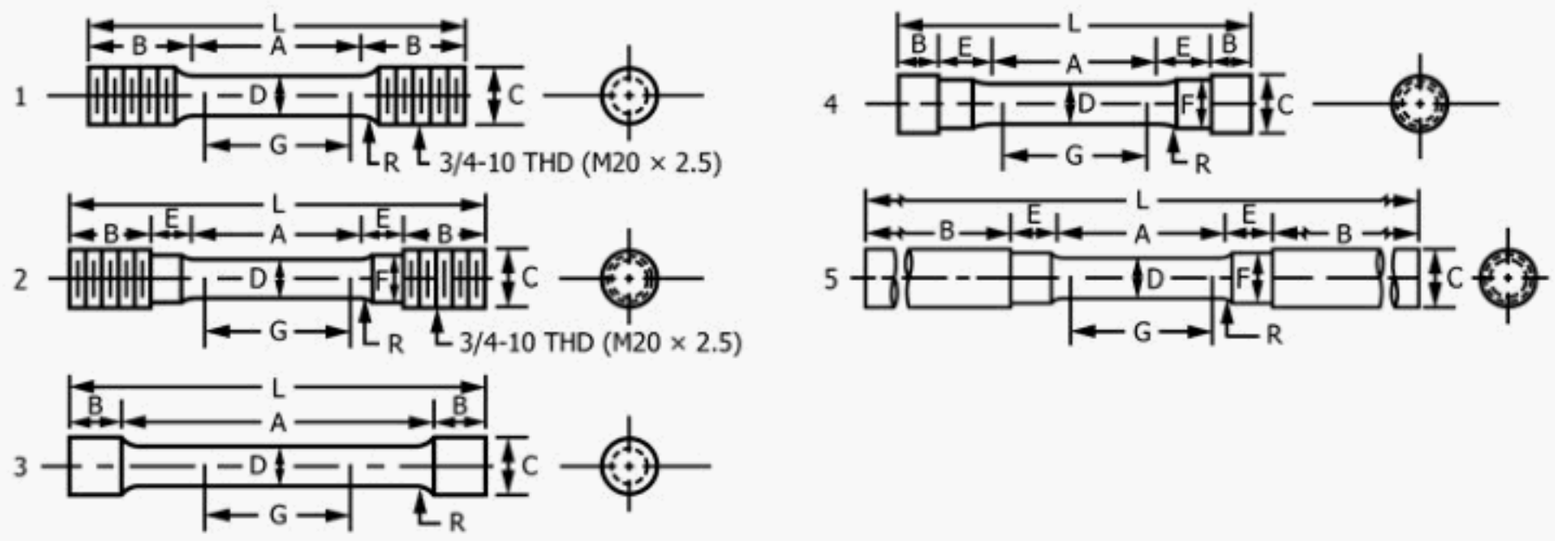

DIMENSIONS

	Specimen 1		Specimen 2		Specimen 3		Specimen 4		Specimen 5	
	in.	mm	in.	mm	in.	mm	in.	mm	in.	mm
G—Gauge length	2.000± 0.005	50.0 ± 0.10	2.000± 0.005	50.0 ± 0.10	2.000± 0.005	50.0 ± 0.10	2.000± 0.005	50.0 ± 0.10	2.00± 0.005	50.0 ± 0.10
D—Diameter (Note 1)	0.500 ± 0.010	12.5± 0.25	0.500 ± 0.010	12.5± 0.25	0.500 ± 0.010	12.5± 0.25	0.500 ± 0.010	12.5± 0.25	0.500± 0.010	12.5 ± 0.25
R—Radius of fillet, min	⅜	10	⅜	10	1/16	2	⅜	10	⅜	10
A—Length of reduced section	2¼, min	60, min	2¼ , min	60, min	4, approximately	100, approximately	2¼ , min	60, min	2¼ , min	60, min
L—Overall length, approximate	5	125	5½	140	5½	140	4¾	120	9½	240
B—Grip section (Note 2)	1⅜ , approximately	35, approximately	1, approximately	25, approximately	¾ , approximately	20, approximately	½ , approximately	13, approximately	3, min	75, min
C—Diameter of end section	¾	20	¾	20	23/32	18	⅞	22	¾	20
E—Length of shoulder and fillet section, approximate	. . .	. . .	⅝	16	. . .	. . .	¾	20	⅝	16
F—Diameter of shoulder	. . .	. . .	⅝	16	. . .	. . .	⅝	16	19/32	15

NOTE 1—The reduced section may have a gradual taper from the ends toward the center with the ends not more than 0.005 in. (0.10 mm) larger in diameter than the center.

NOTE 2—On Specimen 5 it is desirable, if possible, to make the length of the grip section great enough to allow the specimen to extend into the grips a distance equal to two thirds or more of the length of the grips.

NOTE 3—The types of ends shown are applicable for the standard 0.500-in. round tension test specimen; similar types can be used for subsize specimens. The use of UNF series of threads (¾ by 16, ½ by 20, ⅜ by 24, and ¼ by 28) is suggested for high-strength brittle materials to avoid fracture in the thread portion.

FIG. 5 Suggested Types of Ends for Standard Round Tension Test Specimens

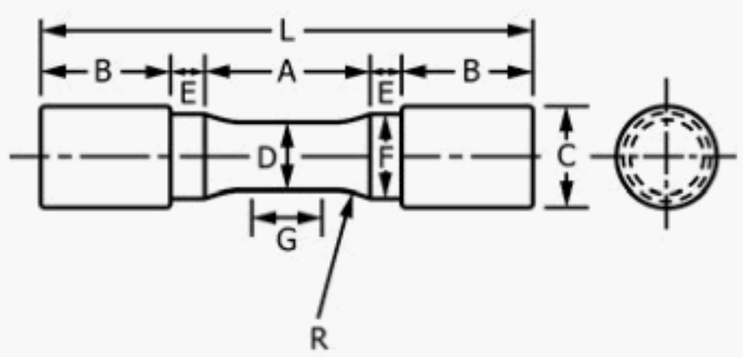

DIMENSIONS

	Specimen 1		Specimen 2		Specimen 3	
	in.	mm	in.	mm	in.	mm
G—Length of parallel	Shall be equal to or greater than diameter *D*					
D—Diameter	0.500 ± 0.010	12.5± 0.25	0.750 ± 0.015	20.0 ± 0.40	1.25 ± 0.025	30.0 ± 0.60
R—Radius of fillet, min	1	25	1	25	2	50
A—Length of reduced section, min	1¼	32	1½	38	2¼	60
L—Over-all length, min	3¾	95	4	100	6⅜	160
B—Grip section, approximate	1	25	1	25	1¾	45
C—Diameter of end section, approximate	¾	20	1⅛	30	1⅞	48
E—Length of shoulder, min	¼	6	¼	6	5/16	8
F—Diameter of shoulder	⅝ ± 1/64	16.0 ± 0.40	15/16 ± 1/64	24.0 ± 0.40	1 7/16 ± 1/64	36.5 ± 0.40

NOTE 1—The reduced section and shoulders (dimensions *A, D, E, F, G,* and *R*) shall be shown, but the ends may be of any form to fit the holders of the testing machine in such a way that the load shall be axial. Commonly the ends are threaded and have the dimensions *B* and *C* given above.

FIG. 6 Standard Tension Test Specimens for Cast Iron

TABLE 1 Multiplying Factors to Be Used for Various Diameters of Round Test Specimens

Standard Specimen			Small Size Specimens Proportional to Standard					
0.500 in. Round			0.350 in. Round			0.250 in. Round		
Actual Diameter, in.	Area, in.^{2}	Multiplying Factor	Actual Diameter, in.	Area, in.^{2}	Multiplying Factor	Actual Diameter, in.	Area, in.^{2}	Multiplying Factor
0.490	0.1886	5.30	0.343	0.0924	10.82	0.245	0.0471	21.21
0.491	0.1893	5.28	0.344	0.0929	10.76	0.246	0.0475	21.04
0.492	0.1901	5.26	0.345	0.0935	10.70	0.247	0.0479	20.87
0.493	0.1909	5.24	0.346	0.0940	10.64	0.248	0.0483	20.70
0.494	0.1917	5.22	0.347	0.0946	10.57	0.249	0.0487	20.54
0.495	0.1924	5.20	0.348	0.0951	10.51	0.250	0.0491	20.37
0.496	0.1932	5.18	0.349	0.0957	10.45	0.251	0.0495	20.21
							(0.05)[A]	(20.0)[A]
0.497	0.1940	5.15	0.350	0.0962	10.39	0.252	0.0499	20.05
							(0.05)[A]	(20.0)[A]
0.498	0.1948	5.13	0.351	0.0968	10.33	0.253	0.0503	19.89
							(0.05)[A]	(20.0)[A]
0.499	0.1956	5.11	0.352	0.0973	10.28	0.254	0.0507	19.74
0.500	0.1963	5.09	0.353	0.0979	10.22	0.255	0.0511	19.58
0.501	0.1971	5.07	0.354	0.0984	10.16	. . .	. . .	. . .
0.502	0.1979	5.05	0.355	0.0990	10.10	. . .	. . .	. . .
0.503	0.1987	5.03	0.356	0.0995	10.05	. . .	. . .	. . .
				(0.1)[A]	(10.0)[A]	. . .	. . .	. . .
0.504	0.1995	5.01	0.357	0.1001	9.99	. . .	. . .	. . .
	(0.2)[A]	(5.0)[A]		(0.1)[A]	(10.0)[A]	. . .	. . .	. . .
0.505	0.2003	4.99	. . .	. . .	. . .	. . .	. . .	. . .
	(0.2)[A]	(5.0)[A]						
0.506	0.2011	4.97	. . .	. . .	. . .	. . .	. . .	. . .
	(0.2)[A]	(5.0)[A]						
0.507	0.2019	4.95	. . .	. . .	. . .	. . .	. . .	. . .
0.508	0.2027	4.93	. . .	. . .	. . .	. . .	. . .	. . .
0.509	0.2035	4.91	. . .	. . .	. . .	. . .	. . .	. . .
0.510	0.2043	4.90	. . .	. . .	. . .	. . .	. . .	. . .

[A] The values in parentheses may be used for ease in calculation of stresses, in pounds per square inch, as permitted in Note 5 of Fig. 4.

12.3 The type of specimen ends outside of the gauge length shall accommodate the shape of the product tested, and shall properly fit the holders or grips of the testing machine so that axial loads are applied with a minimum of load eccentricity and slippage. Fig. 5 shows specimens with various types of ends that have given satisfactory results.

13. Gauge Marks

13.1 The specimens shown in Figs. 3-6 shall be gauge marked with a center punch, scribe marks, multiple device, or drawn with ink. The purpose of these gauge marks is to determine the percent elongation. Punch marks shall be light, sharp, and accurately spaced. The localization of stress at the marks makes a hard specimen susceptible to starting fracture at the punch marks. The gauge marks for measuring elongation after fracture shall be made on the flat or on the edge of the flat tension test specimen and within the parallel section; for the 8-in. gauge length specimen, Fig. 3, one or more sets of 8-in. gauge marks may be used, intermediate marks within the gauge length being optional. Rectangular 2-in. gauge length specimens, Fig. 3, and round specimens, Fig. 4, are gauge marked with a double-pointed center punch or scribe marks. One or more sets of gauge marks may be used; however, one set must be approximately centered in the reduced section. These same precautions shall be observed when the test specimen is full section.

14. Determination of Tensile Properties

14.1 *Yield Point*—Yield point is the first stress in a material, less than the maximum obtainable stress, at which an increase in strain occurs without an increase in stress. Yield point is intended for application only for materials that may exhibit the unique characteristic of showing an increase in strain without an increase in stress. The stress-strain diagram is characterized by a sharp knee or discontinuity. Determine yield point by one of the following methods:

14.1.1 *Drop of Beam or Halt of Pointer Method*—In this method, apply an increasing load to the specimen at a uniform rate. When a lever and poise machine is used, keep the beam in balance by running out the poise at approximately a steady rate. When the yield point of the material is reached, the increase of the load will stop, but run the poise a trifle beyond the balance position, and the beam of the machine will drop for a brief but appreciable interval of time. When a machine equipped with a load-indicating dial is used there is a halt or hesitation of the load-indicating pointer corresponding to the

drop of the beam. Note the load at the "drop of the beam" or the "halt of the pointer" and record the corresponding stress as the yield point.

14.1.2 *Autographic Diagram Method*—When a sharp-kneed stress-strain diagram is obtained by an autographic recording device, take the stress corresponding to the top of the knee (Fig. 7), or the stress at which the curve drops as the yield point.

14.1.3 *Total Extension Under Load Method*—When testing material for yield point and the test specimens may not exhibit a well-defined disproportionate deformation that characterizes a yield point as measured by the drop of the beam, halt of the pointer, or autographic diagram methods described in 14.1.1 and 14.1.2, a value equivalent to the yield point in its practical significance may be determined by the following method and may be recorded as yield point: Attach a Class C or better extensometer (Notes 5 and 6) to the specimen. When the load producing a specified extension (Note 7) is reached record the stress corresponding to the load as the yield point (Fig. 8).

NOTE 5—Automatic devices are available that determine the load at the specified total extension without plotting a stress-strain curve. Such devices may be used if their accuracy has been demonstrated. Multiplying calipers and other such devices are acceptable for use provided their accuracy has been demonstrated as equivalent to a Class C extensometer.

NOTE 6—Reference should be made to Practice E83.

NOTE 7—For steel with a yield point specified not over 80 000 psi (550 MPa), an appropriate value is 0.005 in./in. of gauge length. For values above 80 000 psi, this method is not valid unless the limiting total extension is increased.

NOTE 8—The shape of the initial portion of an autographically determined stress-strain (or a load-elongation) curve may be influenced by numerous factors such as the seating of the specimen in the grips, the straightening of a specimen bent due to residual stresses, and the rapid loading permitted in 8.4.1. Generally, the aberrations in this portion of the curve should be ignored when fitting a modulus line, such as that used to determine the extension-under-load yield, to the curve. In practice, for a number of reasons, the straight-line portion of the stress-strain curve may not go through the origin of the stress-strain diagram. In these cases it is not the origin of the stress-strain diagram, but rather where the straight-line portion of the stress-strain curve, intersects the strain axis that is pertinent. All offsets and extensions should be calculated from the intersection of the straight-line portion of the stress-strain curve with the strain axis, and not necessarily from the origin of the stress-strain diagram. See also Test Methods E8/E8M, Note 32.

14.2 *Yield Strength*—Yield strength is the stress at which a material exhibits a specified limiting deviation from the proportionality of stress to strain. The deviation is expressed in terms of strain, percent offset, total extension under load, and so forth. Determine yield strength by one of the following methods:

14.2.1 *Offset Method*—To determine the yield strength by the "offset method," it is necessary to secure data (autographic or numerical) from which a stress-strain diagram with a distinct modulus characteristic of the material being tested may be drawn. Then on the stress-strain diagram (Fig. 9) lay off *Om* equal to the specified value of the offset, draw *mn* parallel to *OA*, and thus locate *r*, the intersection of *mn* with the stress-strain curve corresponding to load *R*, which is the yield-strength load. In recording values of yield strength obtained by this method, the value of offset specified or used, or both, shall be stated in parentheses after the term yield strength, for example:

$$\text{Yield strength } (0.2\,\%\text{ offset}) = 52\,000 \text{ psi } (360 \text{ MPa}) \quad (1)$$

When the offset is 0.2 % or larger, the extensometer used shall qualify as a Class B2 device over a strain range of 0.05 to 1.0 %. If a smaller offset is specified, it may be necessary to specify a more accurate device (that is, a Class B1 device) or reduce the lower limit of the strain range (for example, to 0.01 %) or both. See also Note 10 for automatic devices.

NOTE 9—For stress-strain diagrams not containing a distinct modulus, such as for some cold-worked materials, it is recommended that the extension under load method be utilized. If the offset method is used for materials without a distinct modulus, a modulus value appropriate for the material being tested should be used: 30 000 000 psi (207 000 MPa) for carbon steel; 29 000 000 psi (200 000 MPa) for ferritic stainless steel; 28 000 000 psi (193 000 MPa) for austenitic stainless steel. For special alloys, the producer should be contacted to discuss appropriate modulus values.

14.2.2 *Extension Under Load Method*—For tests to determine the acceptance or rejection of material whose stress-strain characteristics are well known from previous tests of similar material in which stress-strain diagrams were plotted, the total strain corresponding to the stress at which the specified offset (see Notes 10 and 11) occurs will be known within satisfactory limits. The stress on the specimen, when this total strain is reached, is the value of the yield strength. In recording values of yield strength obtained by this method, the value of "extension" specified or used, or both, shall be stated in parentheses after the term yield strength, for example:

$$\text{Yield strength } (0.5\,\%\ EUL) = 52\,000 \text{ psi } (360 \text{ MPa}) \quad (2)$$

The total strain can be obtained satisfactorily by use of a Class B1 extensometer (Note 5, Note 6, and Note 8).

NOTE 10—Automatic devices are available that determine offset yield strength without plotting a stress-strain curve. Such devices may be used if their accuracy has been demonstrated.

NOTE 11—The appropriate magnitude of the extension under load will obviously vary with the strength range of the particular steel under test. In general, the value of extension under load applicable to steel at any strength level may be determined from the sum of the proportional strain and the plastic strain expected at the specified yield strength. The following equation is used:

$$\text{Extension under load, in./in. of gauge length} = (YS/E) + r \quad (3)$$

where:

YS = specified yield strength, psi or MPa,
E = modulus of elasticity, psi or MPa, and
r = limiting plastic strain, in./in.

14.3 *Tensile Strength*—Calculate the tensile strength by dividing the maximum load the specimen sustains during a tension test by the original cross-sectional area of the specimen. If the upper yield strength is the maximum stress recorded and if the stress-strain curve resembles that of Test Methods E8/E8M–15a Fig. 25, the maximum stress after discontinuous yielding shall be reported as the tensile strength unless otherwise stated by the purchaser.

14.4 *Elongation:*

14.4.1 Fit the ends of the fractured specimen together carefully and measure the distance between the gauge marks to the nearest 0.01 in. (0.25 mm) for gauge lengths of 2 in. and under, and to the nearest 0.5 % of the gauge length for gauge

lengths over 2 in. A percentage scale reading to 0.5 % of the gauge length may be used. The elongation is the increase in length of the gauge length, expressed as a percentage of the original gauge length. In recording elongation values, give both the percentage increase and the original gauge length.

14.4.2 If any part of the fracture takes place outside of the middle half of the gauge length or in a punched or scribed mark within the reduced section, the elongation value obtained may not be representative of the material. If the elongation so measured meets the minimum requirements specified, no further testing is indicated, but if the elongation is less than the minimum requirements, discard the test and retest.

14.4.3 Automated tensile testing methods using extensometers allow for the measurement of elongation in a method described below. Elongation may be measured and reported either this way, or as in the method described above, fitting the broken ends together. Either result is valid.

14.4.4 Elongation at fracture is defined as the elongation measured just prior to the sudden decrease in force associated with fracture. For many ductile materials not exhibiting a sudden decrease in force, the elongation at fracture can be taken as the strain measured just prior to when the force falls below 10 % of the maximum force encountered during the test.

14.4.4.1 Elongation at fracture shall include elastic and plastic elongation and may be determined with autographic or automated methods using extensometers verified over the strain range of interest. Use a class B2 or better extensometer for materials having less than 5 % elongation; a class C or better extensometer for materials having elongation greater than or equal to 5 % but less than 50 %; and a class D or better extensometer for materials having 50 % or greater elongation. In all cases, the extensometer gauge length shall be the nominal gauge length required for the specimen being tested. Due to the lack of precision in fitting fractured ends together, the elongation after fracture using the manual methods of the preceding paragraphs may differ from the elongation at fracture determined with extensometers.

14.4.4.2 Percent elongation at fracture may be calculated directly from elongation at fracture data and be reported instead of percent elongation as calculated in 14.4.1. However, these two parameters are not interchangeable. Use of the elongation at fracture method generally provides more repeatable results.

14.5 *Reduction of Area*—Fit the ends of the fractured specimen together and measure the mean diameter or the width and thickness at the smallest cross section to the same accuracy as the original dimensions. The difference between the area thus found and the area of the original cross section expressed as a percentage of the original area is the reduction of area.

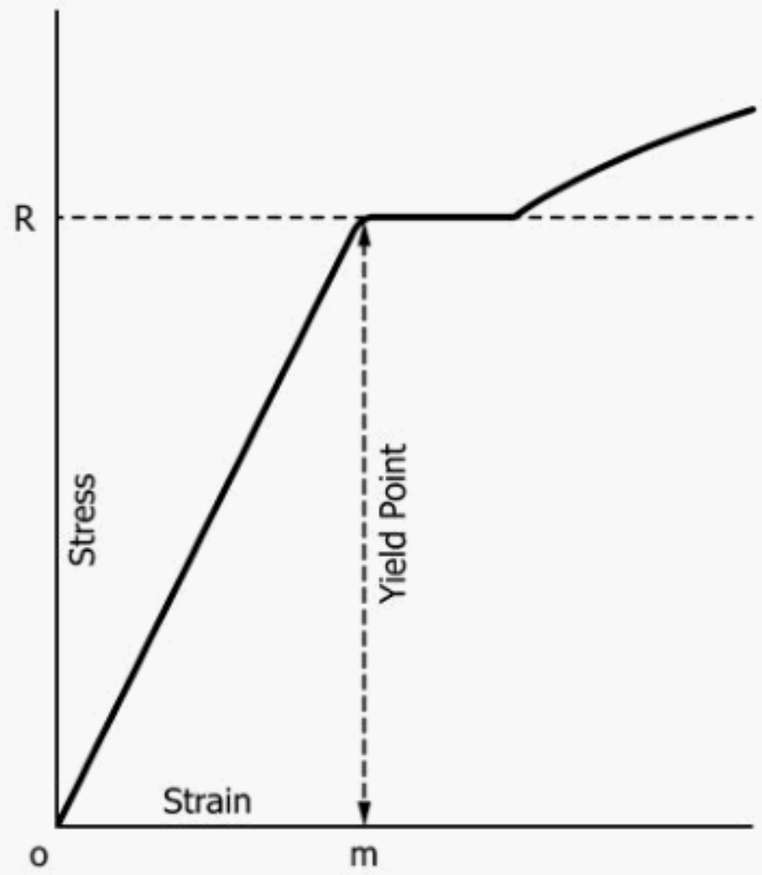

FIG. 7 Stress-strain Diagram Showing Yield Point Corresponding With Top of Knee

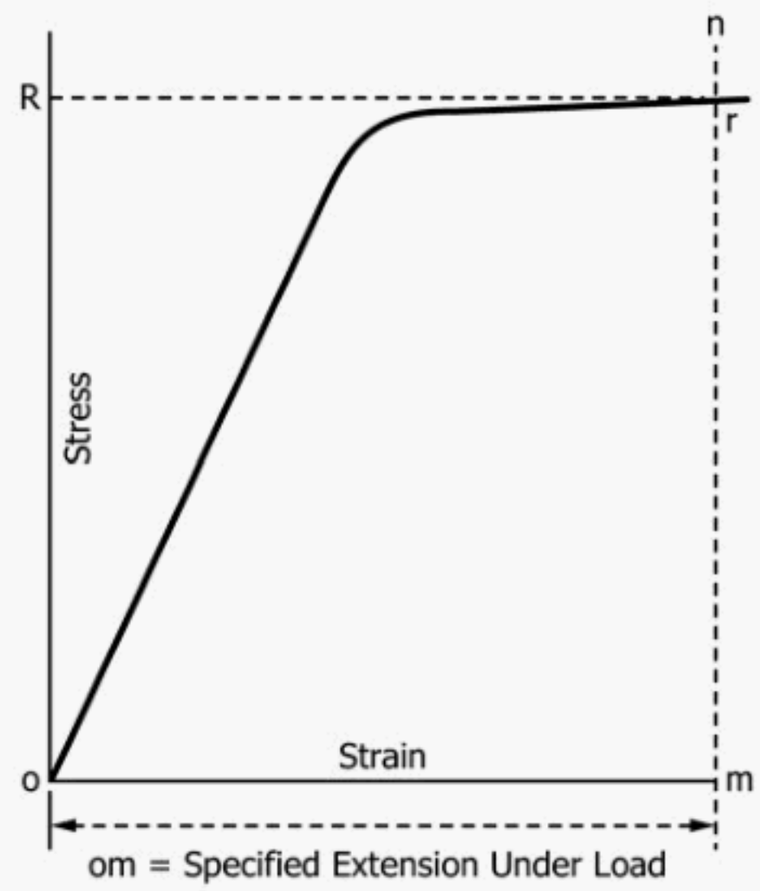

FIG. 8 Stress-strain Diagram Showing Yield Point or Yield Strength by Extension Under Load Method

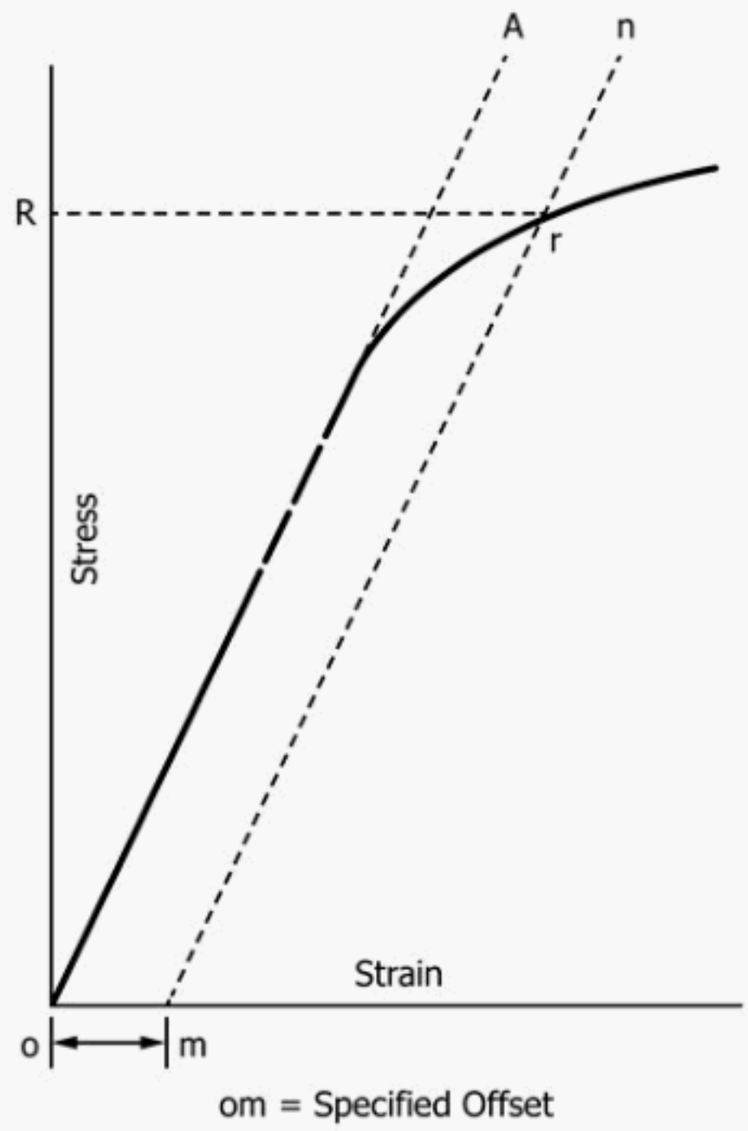

FIG. 9 Stress-strain Diagram for Determination of Yield Strength by Offset Method

BEND TEST

15. Description

15.1 The bend test is one method for evaluating ductility, but it cannot be considered as a quantitative means of predicting service performance in all bending operations. The severity of the bend test is primarily a function of the angle of bend of the inside diameter to which the specimen is bent, and of the cross section of the specimen. These conditions are varied according to location and orientation of the test specimen and the chemical composition, tensile properties, hardness, type, and quality of the steel specified. Test Methods E190 and E290 may be consulted for methods of performing the test.

15.2 Unless otherwise specified, it shall be permissible to age bend test specimens. The time-temperature cycle employed must be such that the effects of previous processing will not be materially changed. It may be accomplished by aging at room temperature 24 to 48 h, or in shorter time at moderately elevated temperatures by boiling in water or by heating in oil or in an oven.

15.3 Bend the test specimen at room temperature to an inside diameter, as designated by the applicable product specifications, to the extent specified. The speed of bending is ordinarily not an important factor.

HARDNESS TEST

16. General

16.1 A hardness test is a means of determining resistance to penetration and is occasionally employed to obtain a quick approximation of tensile strength. Tables 2-5 are for the conversion of hardness measurements from one scale to another or to approximate tensile strength. These conversion values have been obtained from computer-generated curves and are presented to the nearest 0.1 point to permit accurate reproduction of those curves. All converted hardness values must be considered approximate. All converted Rockwell and Vickers hardness numbers shall be rounded to the nearest whole number.

16.2 *Hardness Testing:*

16.2.1 If the product specification permits alternative hardness testing to determine conformance to a specified hardness requirement, the conversions listed in Tables 2-5 shall be used.

16.2.2 When recording converted hardness numbers, the measured hardness and test scale shall be indicated in parentheses, for example: 353 HBW (38 HRC). This means that a hardness value of 38 was obtained using the Rockwell C scale and converted to a Brinell hardness of 353.

17. Brinell Test

17.1 *Description:*

17.1.1 A specified load is applied to a flat surface of the specimen to be tested, through a tungsten carbide ball of specified diameter. The average diameter of the indentation is used as a basis for calculation of the Brinell hardness number. The quotient of the applied load divided by the area of the surface of the indentation, which is assumed to be spherical, is termed the Brinell hardness number (HBW) in accordance with the following equation:

$$HBW = P/\left[(\pi D/2)\left(D - \sqrt{D^2 - d^2}\right)\right] \quad (4)$$

where:

HBW = Brinell hardness number,
P = applied load, kgf,
D = diameter of the tungsten carbide ball, mm, and
d = average diameter of the indentation, mm.

NOTE 12—The Brinell hardness number is more conveniently secured from standard tables such as Table 6, which show numbers corresponding to the various indentation diameters, usually in increments of 0.05 mm.

NOTE 13—In Test Method E10 the values are stated in SI units, whereas in this section kg/m units are used.

17.1.2 The standard Brinell test using a 10 mm tungsten carbide ball employs a 3000 kgf load for hard materials and a 1500 or 500 kgf load for thin sections or soft materials (see Annex A2 on Steel Tubular Products). Other loads and different size indentors may be used when specified. In recording hardness values, the diameter of the ball and the load must be stated except when a 10 mm ball and 3000 kgf load are used.

17.1.3 A range of hardness can properly be specified only for quenched and tempered or normalized and tempered material. For annealed material a maximum figure only should be specified. For normalized material a minimum or a maximum hardness may be specified by agreement. In general, no hardness requirements should be applied to untreated material.

17.1.4 Brinell hardness may be required when tensile properties are not specified.

17.2 *Apparatus*—Equipment shall meet the following requirements:

17.2.1 *Testing Machine*—A Brinell hardness testing machine is acceptable for use over a loading range within which its load measuring device is accurate to ±1 %.

TABLE 2 Approximate Hardness Conversion Numbers for Nonaustenitic Steels[A] (Rockwell C to Other Hardness Numbers)

Rockwell C Scale, 150 kgf Load, Diamond Penetrator	Vickers Hardness Number	Brinell Hardness 3000 kgf Load, 10 mm Ball	Knoop Hardness, 500 gf Load and Over	Rockwell A Scale, 60 kgf Load, Diamond Penetrator	Rockwell Superficial Hardness			Approximate Tensile Strength, ksi (MPa)
					15N Scale, 15 kgf Load, Diamond Penetrator	30N Scale 30 kgf Load, Diamond Penetrator	45N Scale, 45 kgf Load, Diamond Penetrator	
68	940	. . .	920	85.6	93.2	84.4	75.4	. . .
67	900	. . .	895	85.0	92.9	83.6	74.2	. . .
66	865	. . .	870	84.5	92.5	82.8	73.3	. . .
65	832	739	846	83.9	92.2	81.9	72.0	. . .
64	800	722	822	83.4	91.8	81.1	71.0	. . .
63	772	706	799	82.8	91.4	80.1	69.9	. . .
62	746	688	776	82.3	91.1	79.3	68.8	. . .
61	720	670	754	81.8	90.7	78.4	67.7	. . .
60	697	654	732	81.2	90.2	77.5	66.6	. . .
59	674	634	710	80.7	89.8	76.6	65.5	351 (2420)
58	653	615	690	80.1	89.3	75.7	64.3	338 (2330)
57	633	595	670	79.6	88.9	74.8	63.2	325 (2240)
56	613	577	650	79.0	88.3	73.9	62.0	313 (2160)
55	595	560	630	78.5	87.9	73.0	60.9	301 (2070)
54	577	543	612	78.0	87.4	72.0	59.8	292 (2010)
53	560	525	594	77.4	86.9	71.2	58.6	283 (1950)
52	544	512	576	76.8	86.4	70.2	57.4	273 (1880)
51	528	496	558	76.3	85.9	69.4	56.1	264 (1820)
50	513	482	542	75.9	85.5	68.5	55.0	255 (1760)
49	498	468	526	75.2	85.0	67.6	53.8	246 (1700)
48	484	455	510	74.7	84.5	66.7	52.5	238 (1640)
47	471	442	495	74.1	83.9	65.8	51.4	229 (1580)
46	458	432	480	73.6	83.5	64.8	50.3	221 (1520)
45	446	421	466	73.1	83.0	64.0	49.0	215 (1480)
44	434	409	452	72.5	82.5	63.1	47.8	208 (1430)
43	423	400	438	72.0	82.0	62.2	46.7	201 (1390)
42	412	390	426	71.5	81.5	61.3	45.5	194 (1340)
41	402	381	414	70.9	80.9	60.4	44.3	188 (1300)
40	392	371	402	70.4	80.4	59.5	43.1	182 (1250)
39	382	362	391	69.9	79.9	58.6	41.9	177 (1220)
38	372	353	380	69.4	79.4	57.7	40.8	171 (1180)
37	363	344	370	68.9	78.8	56.8	39.6	166 (1140)
36	354	336	360	68.4	78.3	55.9	38.4	161 (1110)
35	345	327	351	67.9	77.7	55.0	37.2	156 (1080)
34	336	319	342	67.4	77.2	54.2	36.1	152 (1050)
33	327	311	334	66.8	76.6	53.3	34.9	149 (1030)
32	318	301	326	66.3	76.1	52.1	33.7	146 (1010)
31	310	294	318	65.8	75.6	51.3	32.5	141 (970)
30	302	286	311	65.3	75.0	50.4	31.3	138 (950)
29	294	279	304	64.6	74.5	49.5	30.1	135 (930)
28	286	271	297	64.3	73.9	48.6	28.9	131 (900)
27	279	264	290	63.8	73.3	47.7	27.8	128 (880)
26	272	258	284	63.3	72.8	46.8	26.7	125 (860)
25	266	253	278	62.8	72.2	45.9	25.5	123 (850)
24	260	247	272	62.4	71.6	45.0	24.3	119 (820)
23	254	243	266	62.0	71.0	44.0	23.1	117 (810)
22	248	237	261	61.5	70.5	43.2	22.0	115 (790)
21	243	231	256	61.0	69.9	42.3	20.7	112 (770)
20	238	226	251	60.5	69.4	41.5	19.6	110 (760)

[A] This table gives the approximate interrelationships of hardness values and approximate tensile strength of steels. It is possible that steels of various compositions and processing histories will deviate in hardness-tensile strength relationship from the data presented in this table. The data in this table should not be used for austenitic stainless steels, but have been shown to be applicable for ferritic and martensitic stainless steels. The data in this table should not be used to establish a relationship between hardness values and tensile strength of hard drawn wire. Where more precise conversions are required, they should be developed specially for each steel composition, heat treatment, and part. Caution should be exercised if conversions from this table are used for the acceptance or rejection of product. The approximate interrelationships may affect acceptance or rejection.

17.2.2 *Measuring Microscope*—The divisions of the micrometer scale of the microscope or other measuring devices used for the measurement of the diameter of the indentations shall be such as to permit the direct measurement of the diameter to 0.1 mm and the estimation of the diameter to 0.05 mm.

NOTE 14—This requirement applies to the construction of the microscope only and is not a requirement for measurement of the indentation, see 17.4.3.

17.2.3 *Standard Ball*—The standard tungsten carbide ball for Brinell hardness testing is 10 mm (0.3937 in.) in diameter with a deviation from this value of not more than 0.005 mm (0.0002 in.) in any diameter. A tungsten carbide ball suitable for use must not show a permanent change in diameter greater than 0.01 mm (0.0004 in.) when pressed with a force of 3000 kgf against the test specimen. Steel ball indentors are no longer permitted for use in Brinell hardness testing in accordance with these test methods.

TABLE 3 Approximate Hardness Conversion Numbers for Nonaustenitic Steels[A] (Rockwell B to Other Hardness Numbers)

Rockwell B Scale, 100 kgf Load 1/16-in. (1.588 mm) Ball	Vickers Hardness Number	Brinell Hardness, 300 kgf Load, 10 mm Ball	Knoop Hardness, 500 gf Load & Over	Rockwell A Scale, 60 kgf Load, Diamond Penetrator	Rockwell F Scale, 60 kgf Load, 1/16-in. (1.588 mm) Ball	Rockwell Superficial Hardness			Approximate Tensile Strength ksi (MPa)
						15T Scale, 15 kgf Load, 1/16-in. (1.588 mm) Ball	30T Scale, 30 kgf Load, 1/16-in. (1.588 mm) Ball	45T Scale, 45 kgf Load, 1/16-in. (1.588 mm) Ball	
100	240	240	251	61.5	. . .	93.1	83.1	72.9	116 (800)
99	234	234	246	60.9	. . .	92.8	82.5	71.9	114 (785)
98	228	228	241	60.2	. . .	92.5	81.8	70.9	109 (750)
97	222	222	236	59.5	. . .	92.1	81.1	69.9	104 (715)
96	216	216	231	58.9	. . .	91.8	80.4	68.9	102 (705)
95	210	210	226	58.3	. . .	91.5	79.8	67.9	100 (690)
94	205	205	221	57.6	. . .	91.2	79.1	66.9	98 (675)
93	200	200	216	57.0	. . .	90.8	78.4	65.9	94 (650)
92	195	195	211	56.4	. . .	90.5	77.8	64.8	92 (635)
91	190	190	206	55.8	. . .	90.2	77.1	63.8	90 (620)
90	185	185	201	55.2	. . .	89.9	76.4	62.8	89 (615)
89	180	180	196	54.6	. . .	89.5	75.8	61.8	88 (605)
88	176	176	192	54.0	. . .	89.2	75.1	60.8	86 (590)
87	172	172	188	53.4	. . .	88.9	74.4	59.8	84 (580)
86	169	169	184	52.8	. . .	88.6	73.8	58.8	83 (570)
85	165	165	180	52.3	. . .	88.2	73.1	57.8	82 (565)
84	162	162	176	51.7	. . .	87.9	72.4	56.8	81 (560)
83	159	159	173	51.1	. . .	87.6	71.8	55.8	80 (550)
82	156	156	170	50.6	. . .	87.3	71.1	54.8	77 (530)
81	153	153	167	50.0	. . .	86.9	70.4	53.8	73 (505)
80	150	150	164	49.5	. . .	86.6	69.7	52.8	72 (495)
79	147	147	161	48.9	. . .	86.3	69.1	51.8	70 (485)
78	144	144	158	48.4	. . .	86.0	68.4	50.8	69 (475)
77	141	141	155	47.9	. . .	85.6	67.7	49.8	68 (470)
76	139	139	152	47.3	. . .	85.3	67.1	48.8	67 (460)
75	137	137	150	46.8	99.6	85.0	66.4	47.8	66 (455)
74	135	135	147	46.3	99.1	84.7	65.7	46.8	65 (450)
73	132	132	145	45.8	98.5	84.3	65.1	45.8	64 (440)
72	130	130	143	45.3	98.0	84.0	64.4	44.8	63 (435)
71	127	127	141	44.8	97.4	83.7	63.7	43.8	62 (425)
70	125	125	139	44.3	96.8	83.4	63.1	42.8	61 (420)
69	123	123	137	43.8	96.2	83.0	62.4	41.8	60 (415)
68	121	121	135	43.3	95.6	82.7	61.7	40.8	59 (405)
67	119	119	133	42.8	95.1	82.4	61.0	39.8	58 (400)
66	117	117	131	42.3	94.5	82.1	60.4	38.7	57 (395)
65	116	116	129	41.8	93.9	81.8	59.7	37.7	56 (385)
64	114	114	127	41.4	93.4	81.4	59.0	36.7	. . .
63	112	112	125	40.9	92.8	81.1	58.4	35.7	. . .
62	110	110	124	40.4	92.2	80.8	57.7	34.7	. . .
61	108	108	122	40.0	91.7	80.5	57.0	33.7	. . .
60	107	107	120	39.5	91.1	80.1	56.4	32.7	. . .
59	106	106	118	39.0	90.5	79.8	55.7	31.7	. . .
58	104	104	117	38.6	90.0	79.5	55.0	30.7	. . .
57	103	103	115	38.1	89.4	79.2	54.4	29.7	. . .
56	101	101	114	37.7	88.8	78.8	53.7	28.7	. . .
55	100	100	112	37.2	88.2	78.5	53.0	27.7	. . .
54	. . .	. . .	111	36.8	87.7	78.2	52.4	26.7	. . .
53	. . .	. . .	110	36.3	87.1	77.9	51.7	25.7	. . .
52	. . .	. . .	109	35.9	86.5	77.5	51.0	24.7	. . .
51	. . .	. . .	108	35.5	86.0	77.2	50.3	23.7	. . .
50	. . .	. . .	107	35.0	85.4	76.9	49.7	22.7	. . .
49	. . .	. . .	106	34.6	84.8	76.6	49.0	21.7	. . .
48	. . .	. . .	105	34.1	84.3	76.2	48.3	20.7	. . .
47	. . .	. . .	104	33.7	83.7	75.9	47.7	19.7	. . .
46	. . .	. . .	103	33.3	83.1	75.6	47.0	18.7	. . .
45	. . .	. . .	102	32.9	82.6	75.3	46.3	17.7	. . .
44	. . .	. . .	101	32.4	82.0	74.9	45.7	16.7	. . .
43	. . .	. . .	100	32.0	81.4	74.6	45.0	15.7	. . .
42	. . .	. . .	99	31.6	80.8	74.3	44.3	14.7	. . .
41	. . .	. . .	98	31.2	80.3	74.0	43.7	13.6	. . .
40	. . .	. . .	97	30.7	79.7	73.6	43.0	12.6	. . .
39	. . .	. . .	96	30.3	79.1	73.3	42.3	11.6	. . .
38	. . .	. . .	95	29.9	78.6	73.0	41.6	10.6	. . .
37	. . .	. . .	94	29.5	78.0	72.7	41.0	9.6	. . .
36	. . .	. . .	93	29.1	77.4	72.3	40.3	8.6	. . .
35	. . .	. . .	92	28.7	76.9	72.0	39.6	7.6	. . .
34	. . .	. . .	91	28.2	76.3	71.7	39.0	6.6	. . .
33	. . .	. . .	90	27.8	75.7	71.4	38.3	5.6	. . .
32	. . .	. . .	89	27.4	75.2	71.0	37.6	4.6	. . .

TABLE 3 *Continued*

Rockwell B Scale, 100 kgf Load 1/16-in. (1.588 mm) Ball	Vickers Hardness Number	Brinell Hardness, 300 kgf Load, 10 mm Ball	Knoop Hardness, 500 gf Load & Over	Rockwell A Scale, 60 kgf Load, Diamond Penetrator	Rockwell F Scale, 60 kgf Load, 1/16-in. (1.588 mm) Ball	Rockwell Superficial Hardness			Approximate Tensile Strength ksi (MPa)
						15T Scale, 15 kgf Load, 1/16-in. (1.588 mm) Ball	30T Scale, 30 kgf Load, 1/16-in. (1.588 mm) Ball	45T Scale, 45 kgf Load, 1/16-in. (1.588 mm) Ball	
31	. . .	. . .	88	27.0	74.6	70.7	37.0	3.6	. . .
30	. . .	. . .	87	26.6	74.0	70.4	36.3	2.6	. . .

[A] This table gives the approximate interrelationships of hardness values and approximate tensile strength of steels. It is possible that steels of various compositions and processing histories will deviate in hardness-tensile strength relationship from the data presented in this table. The data in this table should not be used for austenitic stainless steels, but have been shown to be applicable for ferritic and martensitic stainless steels. The data in this table should not be used to establish a relationship between hardness values and tensile strength of hard drawn wire. Where more precise conversions are required, they should be developed specially for each steel composition, heat treatment, and part.

TABLE 4 Approximate Hardness Conversion Numbers for Austenitic Steels (Rockwell C to other Hardness Numbers)

Rockwell C Scale, 150 kgf Load, Diamond Penetrator	Rockwell A Scale, 60 kgf Load, Diamond Penetrator	Rockwell Superficial Hardness		
		15N Scale, 15 kgf Load, Diamond Penetrator	30N Scale, 30 kgf Load, Diamond Penetrator	45N Scale, 45 kgf Load, Diamond Penetrator
48	74.4	84.1	66.2	52.1
47	73.9	83.6	65.3	50.9
46	73.4	83.1	64.5	49.8
45	72.9	82.6	63.6	48.7
44	72.4	82.1	62.7	47.5
43	71.9	81.6	61.8	46.4
42	71.4	81.0	61.0	45.2
41	70.9	80.5	60.1	44.1
40	70.4	80.0	59.2	43.0
39	69.9	79.5	58.4	41.8
38	69.3	79.0	57.5	40.7
37	68.8	78.5	56.6	39.6
36	68.3	78.0	55.7	38.4
35	67.8	77.5	54.9	37.3
34	67.3	77.0	54.0	36.1
33	66.8	76.5	53.1	35.0
32	66.3	75.9	52.3	33.9
31	65.8	75.4	51.4	32.7
30	65.3	74.9	50.5	31.6
29	64.8	74.4	49.6	30.4
28	64.3	73.9	48.8	29.3
27	63.8	73.4	47.9	28.2
26	63.3	72.9	47.0	27.0
25	62.8	72.4	46.2	25.9
24	62.3	71.9	45.3	24.8
23	61.8	71.3	44.4	23.6
22	61.3	70.8	43.5	22.5
21	60.8	70.3	42.7	21.3
20	60.3	69.8	41.8	20.2

17.3 *Test Specimen*—Brinell hardness tests are made on prepared areas and sufficient metal must be removed from the surface to eliminate decarburized metal and other surface irregularities. The thickness of the piece tested must be such that no bulge or other marking showing the effect of the load appears on the side of the piece opposite the indentation.

17.4 *Procedure:*

17.4.1 It is essential that the applicable product specifications state clearly the position at which Brinell hardness indentations are to be made and the number of such indentations required. The distance of the center of the indentation from the edge of the specimen or edge of another indentation must be at least two and one-half times the diameter of the indentation.

17.4.2 Apply the load for 10 to 15 s.

17.4.3 Measure diameters of the indentation in accordance with Test Method E10.

17.4.4 The Brinell hardness test is not recommended for materials above 650 HBW.

17.4.4.1 If a ball is used in a test of a specimen which shows a Brinell hardness number greater than the limit for the ball as detailed in 17.4.4, the ball shall be either discarded and replaced with a new ball or remeasured to ensure conformance with the requirements of Test Method E10.

17.5 *Brinell Hardness Values:*

17.5.1 Brinell hardness values shall not be designated by a number alone because it is necessary to indicate which indenter and which force has been employed in making the test. Brinell

TABLE 5 Approximate Hardness Conversion Numbers for Austenitic Steels (Rockwell B to other Hardness Numbers)

Rockwell B Scale, 100 kgf Load, 1/16-in. (1.588 mm) Ball	Brinell Indentation Diameter, mm	Brinell Hardness, 3000 kgf Load, 10 mm Ball	Rockwell A Scale, 60 kgf Load, Diamond Penetrator	Rockwell Superficial Hardness		
				15T Scale, 15 kgf Load, 1/16-in. (1.588 mm) Ball	30T Scale, 30 kgf Load, 1/16-in. (1.588 mm) Ball	45T Scale, 45 kgf Load, 1/16-in. (1.588 mm) Ball
100	3.79	256	61.5	91.5	80.4	70.2
99	3.85	248	60.9	91.2	79.7	69.2
98	3.91	240	60.3	90.8	79.0	68.2
97	3.96	233	59.7	90.4	78.3	67.2
96	4.02	226	59.1	90.1	77.7	66.1
95	4.08	219	58.5	89.7	77.0	65.1
94	4.14	213	58.0	89.3	76.3	64.1
93	4.20	207	57.4	88.9	75.6	63.1
92	4.24	202	56.8	88.6	74.9	62.1
91	4.30	197	56.2	88.2	74.2	61.1
90	4.35	192	55.6	87.8	73.5	60.1
89	4.40	187	55.0	87.5	72.8	59.0
88	4.45	183	54.5	87.1	72.1	58.0
87	4.51	178	53.9	86.7	71.4	57.0
86	4.55	174	53.3	86.4	70.7	56.0
85	4.60	170	52.7	86.0	70.0	55.0
84	4.65	167	52.1	85.6	69.3	54.0
83	4.70	163	51.5	85.2	68.6	52.9
82	4.74	160	50.9	84.9	67.9	51.9
81	4.79	156	50.4	84.5	67.2	50.9
80	4.84	153	49.8	84.1	66.5	49.9

hardness numbers shall be followed by the symbol HBW, and be supplemented by an index indicating the test conditions in the following order:

17.5.1.1 Diameter of the ball, mm,

17.5.1.2 A value representing the applied load, kgf, and,

17.5.1.3 The applied force dwell time, s, if other than 10 to 15 s.

17.5.1.4 The only exception to the above requirement is for the HBW 10/3000 scale when a 10 to 15 s dwell time is used. Only in the case of this one Brinell hardness scale may the designation be reported simply as HBW.

17.5.1.5 *Examples:* 220 HBW = Brinell hardness of 220 determined with a ball of 10 mm diameter and with a test force of 3000 kgf applied for 10 to 15 s; 350 HBW 5/1500 = Brinell hardness of 350 determined with a ball of 5 mm diameter and with a test force of 1500 kgf applied for 10 to 15 s.

17.6 *Detailed Procedure*—For detailed requirements of this test, reference shall be made to the latest revision of Test Method E10.

18. Rockwell Test

18.1 *Description:*

18.1.1 In this test a hardness value is obtained by determining the depth of penetration of a diamond point or a tungsten carbide ball into the specimen under certain arbitrarily fixed conditions. A minor load of 10 kgf is first applied which causes an initial penetration, sets the penetrator on the material and holds it in position. A major load which depends on the scale being used is applied increasing the depth of indentation. The major load is removed and, with the minor load still acting, the Rockwell number, which is proportional to the difference in penetration between the major and minor loads is determined; this is usually done by the machine and shows on a dial, digital display, printer, or other device. This is an arbitrary number which increases with increasing hardness. The scales most frequently used are as follows:

Scale Symbol	Penetrator	Major Load, kgf	Minor Load, kgf
B	1/16-in. tungsten carbide ball	100	10
C	Diamond brale	150	10

18.1.2 Rockwell superficial hardness machines are used for the testing of very thin steel or thin surface layers. Loads of 15, 30, or 45 kgf are applied on a tungsten carbide (or a hardened steel) ball or diamond penetrator, to cover the same range of hardness values as for the heavier loads. Use of a hardened steel ball is permitted only for testing thin sheet tin mill products as found in Specifications A623 and A623M using HR15T and HR30T scales with a diamond spot anvil. (Testing of this product using a tungsten carbide indenter may give significantly different results as compared to historical test data obtained using a hardened steel ball.) The superficial hardness scales are as follows:

Scale Symbol	Penetrator	Major Load, kgf	Minor Load, kgf
15T	1/16-in. tungsten carbide or steel ball	15	3
30T	1/16-in. tungsten carbide or steel ball	30	3
45T	1/16-in. tungsten carbide ball	45	3
15N	Diamond brale	15	3
30N	Diamond brale	30	3
45N	Diamond brale	45	3

18.2 *Reporting Hardness*—In recording hardness values, the hardness number shall always precede the scale symbol, for example: 96 HRBW, 40 HRC, 75 HR15N, 56 HR30TS, or 77 HR30TW. The suffix *W* indicates use of a tungsten carbide ball. The suffix *S* indicates use of a hardened steel ball as permitted in 18.1.2.

TABLE 6 Brinell Hardness Numbers[A]
(Ball 10 mm in Diameter, Applied Loads of 500, 1500, and 3000 kgf)

Diameter of Indentation, mm	Brinell Hardness Number			Diameter of Indentation, mm	Brinell Hardness Number			Diameter of Indentation, mm	Brinell Hardness Number			Diameter of Indentation, mm	Brinell Hardness Number		
	500-kgf Load	1500-kgf Load	3000-kgf Load		500-kgf Load	1500-kgf Load	3000-kgf Load		500-kgf Load	1500-kgf Load	3000-kgf Load		500-kgf Load	1500-kgf Load	3000-kgf Load
2.00	*158*	*473*	*945*	3.25	58.6	176	352	4.50	29.8	89.3	179	5.75	17.5	52.5	105
2.01	*156*	*468*	*936*	3.26	58.3	175	350	4.51	29.6	88.8	178	5.76	17.4	52.3	105
2.02	*154*	*463*	*926*	3.27	57.9	174	347	4.52	29.5	88.4	177	5.77	17.4	52.1	104
2.03	*153*	*459*	*917*	3.28	57.5	173	345	4.53	29.3	88.0	176	5.78	17.3	51.9	104
2.04	*151*	*454*	*908*	3.29	57.2	172	343	4.54	29.2	87.6	175	5.79	17.2	51.7	103
2.05	*150*	*450*	*899*	3.30	56.8	170	341	4.55	29.1	87.2	174	5.80	17.2	51.5	103
2.06	*148*	*445*	*890*	3.31	56.5	169	339	4.56	28.9	86.8	174	5.81	17.1	51.3	103
2.07	*147*	*441*	*882*	3.32	56.1	168	337	4.57	28.8	86.4	173	5.82	17.0	51.1	102
2.08	*146*	*437*	*873*	3.33	55.8	167	335	4.58	28.7	86.0	172	5.83	17.0	50.9	102
2.09	*144*	*432*	*865*	3.34	55.4	166	333	4.59	28.5	85.6	171	5.84	16.9	50.7	101
2.10	*143*	*428*	*856*	3.35	55.1	165	331	4.60	28.4	85.4	170	5.85	16.8	50.5	101
2.11	*141*	*424*	*848*	3.36	54.8	164	329	4.61	28.3	84.8	170	5.86	16.8	50.3	101
2.12	*140*	*420*	*840*	3.37	54.4	163	326	4.62	28.1	84.4	169	5.87	16.7	50.2	100
2.13	*139*	*416*	*832*	3.38	54.1	162	325	4.63	28.0	84.0	168	5.88	16.7	50.0	99.9
2.14	*137*	*412*	*824*	3.39	53.8	161	323	4.64	27.9	83.6	167	5.89	16.6	49.8	99.5
2.15	*136*	*408*	*817*	3.40	53.4	160	321	4.65	27.8	83.3	167	5.90	16.5	49.6	99.2
2.16	*135*	*404*	*809*	3.41	53.1	159	319	4.66	27.6	82.9	166	5.91	16.5	49.4	98.8
2.17	*134*	*401*	*802*	3.42	52.8	158	317	4.67	27.5	82.5	165	5.92	16.4	49.2	98.4
2.18	*132*	*397*	*794*	3.43	52.5	157	315	4.68	27.4	82.1	164	5.93	16.3	49.0	98.0
2.19	*131*	*393*	*787*	3.44	52.2	156	313	4.69	27.3	81.8	164	5.94	16.3	48.8	97.7
2.20	*130*	*390*	*780*	3.45	51.8	156	311	4.70	27.1	81.4	163	5.95	16.2	48.7	97.3
2.21	*129*	*386*	*772*	3.46	51.5	155	309	4.71	27.0	81.0	162	5.96	16.2	48.5	96.9
2.22	*128*	*383*	*765*	3.47	51.2	154	307	4.72	26.9	80.7	161	5.97	16.1	48.3	96.6
2.23	*126*	*379*	*758*	3.48	50.9	153	306	4.73	26.8	80.3	161	5.98	16.0	48.1	96.2
2.24	*125*	*376*	*752*	3.49	50.6	152	304	4.74	26.6	79.9	160	5.99	16.0	47.9	95.9
2.25	*124*	*372*	*745*	3.50	50.3	151	302	4.75	26.5	79.6	159	6.00	*15.9*	47.7	95.5
2.26	*123*	*369*	*738*	3.51	50.0	150	300	4.76	26.4	79.2	158	6.01	*15.9*	47.6	95.1
2.27	*122*	*366*	*732*	3.52	49.7	149	298	4.77	26.3	78.9	158	6.02	*15.8*	47.4	94.8
2.28	*121*	*363*	*725*	3.53	49.4	148	297	4.78	26.2	78.5	157	6.03	*15.7*	47.2	94.4
2.29	*120*	*359*	*719*	3.54	49.2	147	295	4.79	26.1	78.2	156	6.04	*15.7*	47.0	94.1
2.30	*119*	*356*	*712*	3.55	48.9	147	293	4.80	25.9	77.8	156	6.05	*15.6*	46.8	93.7
2.31	*118*	*353*	*706*	3.56	48.6	146	292	4.81	25.8	77.5	155	6.06	*15.6*	46.7	93.4
2.32	*117*	*350*	*700*	3.57	48.3	145	290	4.82	25.7	77.1	154	6.07	*15.5*	46.5	93.0
2.33	*116*	*347*	*694*	3.58	48.0	144	288	4.83	25.6	76.8	154	6.08	*15.4*	46.3	92.7
2.34	*115*	*344*	*688*	3.59	47.7	143	286	4.84	25.5	76.4	153	6.09	*15.4*	46.2	92.3
2.35	*114*	*341*	*682*	3.60	47.5	142	285	4.85	25.4	76.1	152	6.10	*15.3*	46.0	92.0
2.36	*113*	*338*	*676*	3.61	47.2	142	283	4.86	25.3	75.8	152	6.11	*15.3*	45.8	91.7
2.37	*112*	*335*	*670*	3.62	46.9	141	282	4.87	25.1	75.4	151	6.12	*15.2*	45.7	91.3
2.38	*111*	*332*	*665*	3.63	46.7	140	280	4.88	25.0	75.1	150	6.13	*15.2*	45.5	91.0
2.39	*110*	*330*	*659*	3.64	46.4	139	278	4.89	24.9	74.8	150	6.14	*15.1*	45.3	90.6
2.40	*109*	*327*	*653*	3.65	46.1	138	277	4.90	24.8	74.4	149	6.15	*15.1*	45.2	90.3
2.41	*108*	*324*	*648*	3.66	45.9	138	275	4.91	24.7	74.1	148	6.16	*15.0*	45.0	90.0
2.42	*107*	*322*	*643*	3.67	45.6	137	274	4.92	24.6	73.8	148	6.17	*14.9*	44.8	89.6
2.43	*106*	*319*	*637*	3.68	45.4	136	272	4.93	24.5	73.5	147	6.18	*14.9*	44.7	89.3
2.44	*105*	*316*	*632*	3.69	45.1	135	271	4.94	24.4	73.2	146	6.19	*14.8*	44.5	89.0
2.45	*104*	*313*	*627*	3.70	44.9	135	269	4.95	24.3	72.8	146	6.20	*14.7*	44.3	88.7
2.46	*104*	*311*	*621*	3.71	44.6	134	268	4.96	24.2	72.5	145	6.21	*14.7*	44.2	88.3
2.47	*103*	*308*	*616*	3.72	44.4	133	266	4.97	24.1	72.2	144	6.22	*14.7*	44.0	88.0
2.48	*102*	*306*	*611*	3.73	44.1	132	265	4.98	24.0	71.9	144	6.23	*14.6*	43.8	87.7
2.49	*101*	*303*	*606*	3.74	43.9	132	263	4.99	23.9	71.6	143	6.24	*14.6*	43.7	87.4
2.50	100	301	601	3.75	43.6	131	262	5.00	23.8	71.3	143	6.25	*14.5*	43.5	87.1
2.51	99.4	298	597	3.76	43.4	130	260	5.01	23.7	71.0	142	6.26	*14.5*	43.4	86.7
2.52	98.6	296	592	3.77	43.1	129	259	5.02	23.6	70.7	141	6.27	*14.4*	43.2	86.4
2.53	97.8	294	587	3.78	42.9	129	257	5.03	23.5	70.4	141	6.28	*14.4*	43.1	86.1
2.54	97.1	291	582	3.79	42.7	128	256	5.04	23.4	70.1	140	6.29	*14.3*	42.9	85.8
2.55	96.3	289	578	3.80	42.4	127	255	5.05	23.3	69.8	140	6.30	*14.2*	42.7	85.5
2.56	95.5	287	573	3.81	42.2	127	253	5.06	23.2	69.5	139	6.31	*14.2*	42.6	85.2
2.57	94.8	284	569	3.82	42.0	126	252	5.07	23.1	69.2	138	6.32	*14.1*	42.4	84.9
2.58	94.0	282	564	3.83	41.7	125	250	5.08	23.0	68.9	138	6.33	*14.1*	42.3	84.6
2.59	93.3	280	560	3.84	41.5	125	249	5.09	22.9	68.6	137	6.34	*14.0*	42.1	84.3
2.60	92.6	278	555	3.85	41.3	124	248	5.10	22.8	68.3	137	6.35	*14.0*	*42.0*	*84.0*
2.61	91.8	276	551	3.86	41.1	123	246	5.11	22.7	68.0	136	6.36	*13.9*	*41.8*	*83.7*
2.62	91.1	273	547	3.87	40.9	123	245	5.12	22.6	67.7	135	6.37	*13.9*	*41.7*	*83.4*
2.63	90.4	271	543	3.88	40.6	122	244	5.13	22.5	67.4	135	6.38	*13.8*	*41.5*	*83.1*
2.64	89.7	269	538	3.89	40.4	121	242	5.14	22.4	67.1	134	6.39	*13.8*	*41.4*	*82.8*
2.65	89.0	267	534	3.90	40.2	121	241	5.15	22.3	66.9	134	6.40	*13.7*	*41.2*	*82.5*
2.66	88.4	265	530	3.91	40.0	120	240	5.16	22.2	66.6	133	6.41	*13.7*	*41.1*	*82.2*
2.67	87.7	263	526	3.92	39.8	119	239	5.17	22.1	66.3	133	6.42	*13.6*	*40.9*	*81.9*
2.68	87.0	261	522	3.93	39.6	119	237	5.18	22.0	66.0	132	6.43	*13.6*	*40.8*	*81.6*
2.69	86.4	259	518	3.94	39.4	118	236	5.19	21.9	65.8	132	6.44	*13.5*	*40.6*	*81.3*

TABLE 6 *Continued*

Diameter of Indentation, mm	Brinell Hardness Number			Diameter of Indentation, mm	Brinell Hardness Number			Diameter of Indentation, mm	Brinell Hardness Number			Diameter of Indentation, mm	Brinell Hardness Number		
	500-kgf Load	1500-kgf Load	3000-kgf Load		500-kgf Load	1500-kgf Load	3000-kgf Load		500-kgf Load	1500-kgf Load	3000-kgf Load		500-kgf Load	1500-kgf Load	3000-kgf Load
2.70	85.7	257	514	3.95	39.1	117	235	5.20	21.8	65.5	131	6.45	*13.5*	*40.5*	*81.0*
2.71	85.1	255	510	3.96	38.9	117	234	5.21	21.7	65.2	130	6.46	*13.4*	*40.4*	*80.7*
2.72	84.4	253	507	3.97	38.7	116	232	5.22	21.6	64.9	130	6.47	*13.4*	*40.2*	*80.4*
2.73	83.8	251	503	3.98	38.5	116	231	5.23	21.6	64.7	129	6.48	*13.4*	*40.1*	*80.1*
2.74	83.2	250	499	3.99	38.3	115	230	5.24	21.5	64.4	129	6.49	*13.3*	*39.9*	*79.8*
2.75	82.6	248	495	4.00	38.1	114	229	5.25	21.4	64.1	128	6.50	*13.3*	*39.8*	*79.6*
2.76	81.9	246	492	4.01	37.9	114	228	5.26	21.3	63.9	128	6.51	*13.2*	*39.6*	*79.3*
2.77	81.3	244	488	4.02	37.7	113	226	5.27	21.2	63.6	127	6.52	*13.2*	*39.5*	*79.0*
2.78	80.8	242	485	4.03	37.5	113	225	5.28	21.1	63.3	127	6.53	*13.1*	*39.4*	*78.7*
2.79	80.2	240	481	4.04	37.3	112	224	5.29	21.0	63.1	126	6.54	*13.1*	*39.2*	*78.4*
2.80	79.6	239	477	4.05	37.1	111	223	5.30	20.9	62.8	126	6.55	*13.0*	*39.1*	*78.2*
2.81	79.0	237	474	4.06	37.0	111	222	5.31	20.9	62.6	125	6.56	*13.0*	*38.9*	*78.0*
2.82	78.4	235	471	4.07	36.8	110	221	5.32	20.8	62.3	125	6.57	*12.9*	*38.8*	*77.6*
2.83	77.9	234	467	4.08	36.6	110	219	5.33	20.7	62.1	124	6.58	*12.9*	*38.7*	*77.3*
2.84	77.3	232	464	4.09	36.4	109	218	5.34	20.6	61.8	124	6.59	*12.8*	*38.5*	*77.1*
2.85	76.8	230	461	4.10	36.2	109	217	5.35	20.5	61.5	123	6.60	*12.8*	*38.4*	*76.8*
2.86	76.2	229	457	4.11	36.0	108	216	5.36	20.4	61.3	123	6.61	*12.8*	*38.3*	*76.5*
2.87	75.7	227	454	4.12	35.8	108	215	5.37	20.3	61.0	122	6.62	*12.7*	*38.1*	*76.2*
2.88	75.1	225	451	4.13	35.7	107	214	5.38	20.3	60.8	122	6.63	*12.7*	*38.0*	*76.0*
2.89	74.6	224	448	4.14	35.5	106	213	5.39	20.2	60.6	121	6.64	*12.6*	*37.9*	*75.7*
2.90	74.1	222	444	4.15	35.3	106	212	5.40	20.1	60.3	121	6.65	*12.6*	*37.7*	*75.4*
2.91	73.6	221	441	4.16	35.1	105	211	5.41	20.0	60.1	120	6.66	*12.5*	*37.6*	*75.2*
2.92	73.0	219	438	4.17	34.9	105	210	5.42	19.9	59.8	120	6.67	*12.5*	*37.5*	*74.9*
2.93	72.5	218	435	4.18	34.8	104	209	5.43	19.9	59.6	119	6.68	*12.4*	*37.3*	*74.7*
2.94	72.0	216	432	4.19	34.6	104	208	5.44	19.8	59.3	119	6.69	*12.4*	*37.2*	*74.4*
2.95	71.5	215	429	4.20	34.4	103	207	5.45	19.7	59.1	118	6.70	*12.4*	*37.1*	*74.1*
2.96	71.0	213	426	4.21	34.2	103	205	5.46	19.6	58.9	118	6.71	*12.3*	*36.9*	*73.9*
2.97	70.5	212	423	4.22	34.1	102	204	5.47	19.5	58.6	117	6.72	*12.3*	*36.8*	*73.6*
2.98	70.1	210	420	4.23	33.9	102	203	5.48	19.5	58.4	117	6.73	*12.2*	*36.7*	*73.4*
2.99	69.6	209	417	4.24	33.7	101	202	5.49	19.4	58.2	116	6.74	*12.2*	*36.6*	*73.1*
3.00	69.1	207	415	4.25	33.6	101	201	5.50	19.3	57.9	116	6.75	*12.1*	*36.4*	*72.8*
3.01	68.6	206	412	4.26	33.4	100	200	5.51	19.2	57.7	115	6.76	*12.1*	*36.3*	*72.6*
3.02	68.2	205	409	4.27	33.2	99.7	199	5.52	19.2	57.5	115	6.77	*12.1*	*36.2*	*72.3*
3.03	67.7	203	406	4.28	33.1	99.2	198	5.53	19.1	57.2	114	6.78	*12.0*	*36.0*	*72.1*
3.04	67.3	202	404	4.29	32.9	98.8	198	5.54	19.0	57.0	114	6.79	*12.0*	*35.9*	*71.8*
3.05	66.8	200	401	4.30	32.8	98.3	197	5.55	18.9	56.8	114	6.80	*11.9*	*35.8*	*71.6*
3.06	66.4	199	398	4.31	32.6	97.8	196	5.56	18.9	56.6	113	6.81	*11.9*	*35.7*	*71.3*
3.07	65.9	198	395	4.32	32.4	97.3	195	5.57	18.8	56.3	113	6.82	*11.8*	*35.5*	*71.1*
3.08	65.5	196	393	4.33	32.3	96.8	194	5.58	18.7	56.1	112	6.83	*11.8*	*35.4*	*70.8*
3.09	65.0	195	390	4.34	32.1	96.4	193	5.59	18.6	55.9	112	6.84	*11.8*	*35.3*	*70.6*
3.10	64.6	194	388	4.35	32.0	95.9	192	5.60	18.6	55.7	111	6.85	*11.7*	*35.2*	*70.4*
3.11	64.2	193	385	4.36	31.8	95.5	191	5.61	18.5	55.5	111	6.86	*11.7*	*35.1*	*70.1*
3.12	63.8	191	383	4.37	31.7	95.0	190	5.62	18.4	55.2	110	6.87	*11.6*	*34.9*	*69.9*
3.13	63.3	190	380	4.38	31.5	94.5	189	5.63	18.3	55.0	110	6.88	*11.6*	*34.8*	*69.6*
3.14	62.9	189	378	4.39	31.4	94.1	188	5.64	18.3	54.8	110	6.89	*11.6*	*34.7*	*69.4*
3.15	62.5	188	375	4.40	31.2	93.6	187	5.65	18.2	54.6	109	6.90	*11.5*	*34.6*	*69.2*
3.16	62.1	186	373	4.41	31.1	93.2	186	5.66	18.1	54.4	109	6.91	*11.5*	*34.5*	*68.9*
3.17	61.7	185	370	4.42	30.9	92.7	185	5.67	18.1	54.2	108	6.92	*11.4*	*34.3*	*68.7*
3.18	61.3	184	368	4.43	30.8	92.3	185	5.68	18.0	54.0	108	6.93	*11.4*	*34.2*	*68.4*
3.19	60.9	183	366	4.44	30.6	91.8	184	5.69	17.9	53.7	107	6.94	*11.4*	*34.1*	*68.2*
3.20	60.5	182	363	4.45	30.5	91.4	183	5.70	17.8	53.5	107	6.95	*11.3*	*34.0*	*68.0*
3.21	60.1	180	361	4.46	30.3	91.0	182	5.71	17.8	53.3	107	6.96	*11.3*	*33.9*	*67.7*
3.22	59.8	179	359	4.47	30.2	90.5	181	5.72	17.7	53.1	106	6.97	*11.3*	*33.8*	*67.5*
3.23	59.4	178	356	4.48	30.0	90.1	180	5.73	17.6	52.9	106	6.98	*11.2*	*33.6*	*67.3*
3.24	59.0	177	354	4.49	29.9	89.7	179	5.74	17.6	52.7	105	6.99	*11.2*	*33.5*	*67.0*

[A] Prepared by the Engineering Mechanics Section, Institute for Standards Technology.

18.3 *Test Blocks*—Machines should be checked to make certain they are in good order by means of standardized Rockwell test blocks.

18.4 *Detailed Procedure*—For detailed requirements of this test, reference shall be made to the latest revision of Test Methods E18.

19. Portable Hardness Test

19.1 Although this standard generally prefers the use of fixed-location Brinell or Rockwell hardness test methods, it is not always possible to perform the hardness test using such equipment due to the part size, location, or other logistical reasons. In this event, hardness testing using portable equipment as described in Test Methods A956/A956M, A1038, and E110 shall be used with strict compliance for reporting the test results in accordance with the selected standard (see examples below).

19.1.1 *Practice A833*—The measured hardness number shall be reported in accordance with the standard methods and given the HBC designation followed by the comparative test bar hardness to indicate that it was determined by a portable comparative hardness tester, as in the following example:

19.1.1.1 *232 HBC/240,* where 232 is the hardness test result using the portable comparative test method (HBC) and 240 is the Brinell hardness of the comparative test bar.

19.1.2 *Test Method A956/A956M:*

19.1.2.1 The measured hardness number shall be reported in accordance with the standard methods and appended with a Leeb impact device in parenthesis to indicate that it was determined by a portable hardness tester, as in the following example:

(1) 350 HLD where 350 is the hardness test result using the portable Leeb hardness test method with the HLD impact device.

19.1.2.2 When hardness values converted from the Leeb number are reported, the portable instrument used shall be reported in parentheses, for example:

(1) 350 HB (HLD) where the original hardness test was performed using the portable Leeb hardness test method with the HLD impact device and converted to the Brinell hardness value (HB).

19.1.3 *Test Method A1038*—The measured hardness number shall be reported in accordance with the standard methods and appended with UCI in parenthesis to indicate that it was determined by a portable hardness tester, as in the following example:

19.1.3.1 *446 HV (UCI) 10* where 446 is the hardness test result using the portable UCI test method under a force of 10 kgf.

19.1.4 *Test Method E110*—The measured hardness number shall be reported in accordance with the standard methods and appended with a /P to indicate that it was determined by a portable hardness tester, as follows:

19.1.4.1 *Rockwell Hardness Examples:*

(1) 40 HRC/P where 40 is the hardness test result using the Rockwell C portable test method.

(2) 72 HRBW/P where 72 is the hardness test result using the Rockwell B portable test method using a tungsten carbide ball indenter.

19.1.4.2 *Brinell Hardness Examples:*

(1) 220 HBW/P 10/3000 where 220 is the hardness test result using the Brinell portable test method with a ball of 10 mm diameter and with a test force of 3000 kgf (29.42 kN) applied for 10 to 15 s.

(2) 350 HBW/P 5/750 where 350 is the hardness test result using the Brinell portable test method with a ball of 5 mm diameter and with a test force of 750 kgf (7.355 kN) applied for 10 to 15 s.

CHARPY IMPACT TESTING

20. Summary

20.1 A Charpy V-notch impact test is a dynamic test in which a notched specimen is struck and broken by a single blow in a specially designed testing machine. The measured test values may be the energy absorbed, the percentage shear fracture, the lateral expansion opposite the notch, or a combination thereof.

20.2 Testing temperatures other than room (ambient) temperature often are specified in product or general requirement specifications (hereinafter referred to as the specification). Although the testing temperature is sometimes related to the expected service temperature, the two temperatures need not be identical.

21. Significance and Use

21.1 *Ductile Versus Brittle Behavior*—Body-centered-cubic or ferritic alloys exhibit a significant transition in behavior when impact tested over a range of temperatures. At temperatures above transition, impact specimens fracture by a ductile (usually microvoid coalescence) mechanism, absorbing relatively large amounts of energy. At lower temperatures, they fracture in a brittle (usually cleavage) manner absorbing appreciably less energy. Within the transition range, the fracture will generally be a mixture of areas of ductile fracture and brittle fracture.

21.2 The temperature range of the transition from one type of behavior to the other varies according to the material being tested. This transition behavior may be defined in various ways for specification purposes.

21.2.1 The specification may require a minimum test result for absorbed energy, fracture appearance, lateral expansion, or a combination thereof, at a specified test temperature.

21.2.2 The specification may require the determination of the transition temperature at which either the absorbed energy or fracture appearance attains a specified level when testing is performed over a range of temperatures. Alternatively the specification may require the determination of the fracture appearance transition temperature (FATTn) as the temperature at which the required minimum percentage of shear fracture (n) is obtained.

21.3 Further information on the significance of impact testing appears in Annex A5.

22. Apparatus

22.1 *Testing Machines:*

22.1.1 A Charpy impact machine is one in which a notched specimen is broken by a single blow of a freely swinging pendulum. The pendulum is released from a fixed height. Since the height to which the pendulum is raised prior to its swing, and the mass of the pendulum are known, the energy of the blow is predetermined. A means is provided to indicate the energy absorbed in breaking the specimen.

22.1.2 The other principal feature of the machine is a fixture (see Fig. 10) designed to support a test specimen as a simple beam at a precise location. The fixture is arranged so that the notched face of the specimen is vertical. The pendulum strikes the other vertical face directly opposite the notch. The dimensions of the specimen supports and striking edge shall conform to Fig. 10.

22.1.3 Charpy machines used for testing steel generally have capacities in the 220 to 300 ft·lbf (300 to 400 J) energy range. Sometimes machines of lesser capacity are used; however, the capacity of the machine should be substantially in excess of the absorbed energy of the specimens (see Test Methods E23). The linear velocity at the point of impact should be in the range of 16 to 19 ft/s (4.9 to 5.8 m/s).

NOTE 15—An investigation of striker radius effect is available.[6]

22.2 *Temperature Media:*

22.2.1 For testing at other than room temperature, it is necessary to condition the Charpy specimens in media at controlled temperatures.

22.2.2 Low temperature media usually are chilled fluids (such as water, ice plus water, dry ice plus organic solvents, or liquid nitrogen) or chilled gases.

22.2.3 Elevated temperature media are usually heated liquids such as mineral or silicone oils. Circulating air ovens may be used.

22.3 *Handling Equipment*—Tongs, especially adapted to fit the notch in the impact specimen, normally are used for removing the specimens from the medium and placing them on the anvil (refer to Test Methods E23). In cases where the machine fixture does not provide for automatic centering of the test specimen, the tongs may be precision machined to provide centering.

23. Sampling and Number of Specimens

23.1 *Sampling:*

23.1.1 Test location and orientation should be addressed by the specifications. If not, for wrought products, the test location shall be the same as that for the tensile specimen and the orientation shall be longitudinal with the notch perpendicular to the major surface of the product being tested.

23.1.2 *Number of Specimens.*

23.1.2.1 All specimens used for a Charpy impact test shall be taken from a single test coupon or test location.

23.1.2.2 When the specification calls for a minimum average test result, three specimens shall be tested.

[6] Supporting data have been filed at ASTM International Headquarters and may be obtained by requesting Research Report RR:A01-1001. Contact ASTM Customer Service at service@astm.org.

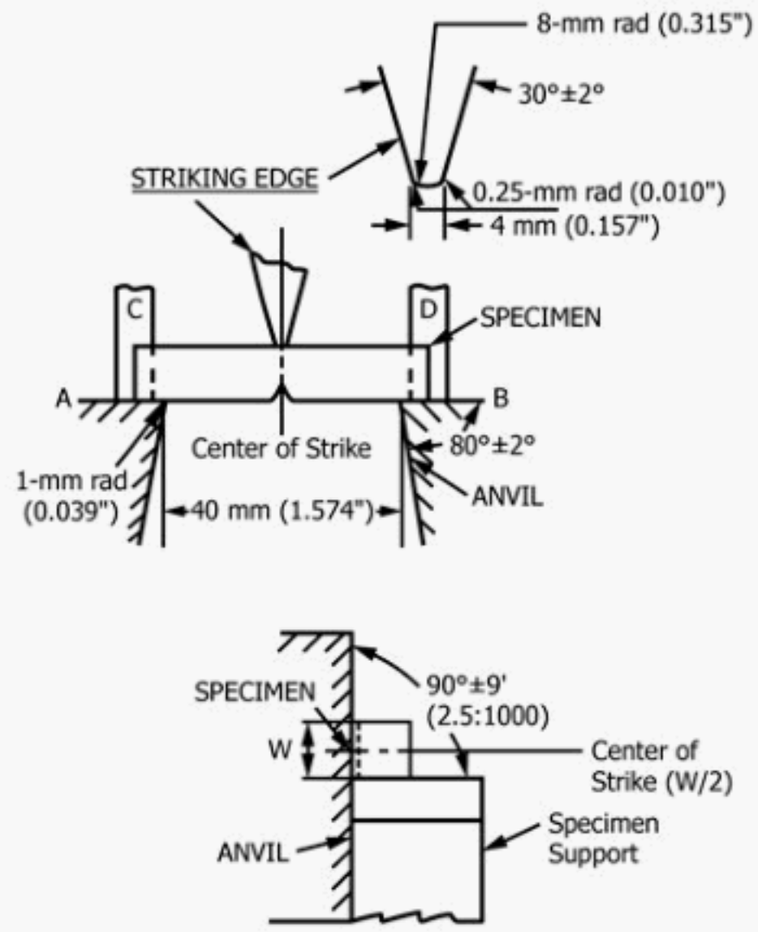

All dimensional tolerances shall be ±0.05 mm (0.002 in.) unless otherwise specified.

NOTE 1—A shall be parallel to B within 2:1000 and coplanar with B within 0.05 mm (0.002 in.).

NOTE 2—C shall be parallel to D within 20:1000 and coplanar with D within 0.125 mm (0.005 in.).

NOTE 3—Finish on unmarked parts shall be 4 µm (125 µin.).

NOTE 4—Tolerance for the striker corner radius shall be –0.05 mm (0.002 in.)/+0.50 mm (0.020 in.)

FIG. 10 Charpy (Simple-beam) Impact Test

23.1.2.3 When the specification requires determination of a transition temperature, eight to twelve specimens are usually needed.

23.2 *Type and Size:*

23.2.1 Use a standard full size Charpy V-notch specimen as shown in Fig. 11, except as allowed in 23.2.2.

23.2.2 *Subsized Specimens.*

23.2.2.1 For flat material less than 7⁄16 in. (11 mm) thick, or when the absorbed energy is expected to exceed 80 % of full scale, use standard subsize test specimens.

23.2.2.2 For tubular materials tested in the transverse direction, where the relationship between diameter and wall thickness does not permit a standard full size specimen, use standard subsize test specimens or standard size specimens containing outer diameter (OD) curvature as follows:

(1) Standard size specimens and subsize specimens may contain the original OD surface of the tubular product as shown in Fig. 12. All other dimensions shall comply with the requirements of Fig. 11.

NOTE 16—For materials with toughness levels in excess of about 50 ft-lbs, specimens containing the original OD surface may yield values in excess of those resulting from the use of conventional Charpy specimens.

23.2.2.3 If a standard full-size specimen cannot be prepared, the largest feasible standard subsize specimen shall be prepared. The specimens shall be machined so that the specimen does not include material nearer to the surface than 0.020 in. (0.5 mm).

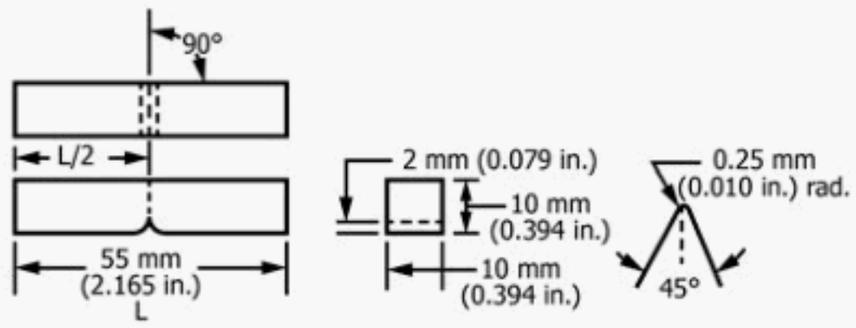

NOTE 1—Permissible variations shall be as follows:

Notch length to edge	90 ±2°
Adjacent sides shall be at	90° ± 10 min
Cross-section dimensions	±0.075 mm (±0.003 in.)
Length of specimen (L)	+ 0, – 2.5 mm (+ 0, – 0.100 in.)
Centering of notch (L/2)	±1 mm (±0.039 in.)
Angle of notch	±1°
Radius of notch	±0.025 mm (±0.001 in.)
Notch depth	±0.025 mm (±0.001 in.)
Finish requirements	2 µm (63 µin.) on notched surface and opposite face; 4 µm (125 µin.) on other two surfaces

(*a*) Standard Full Size Specimen

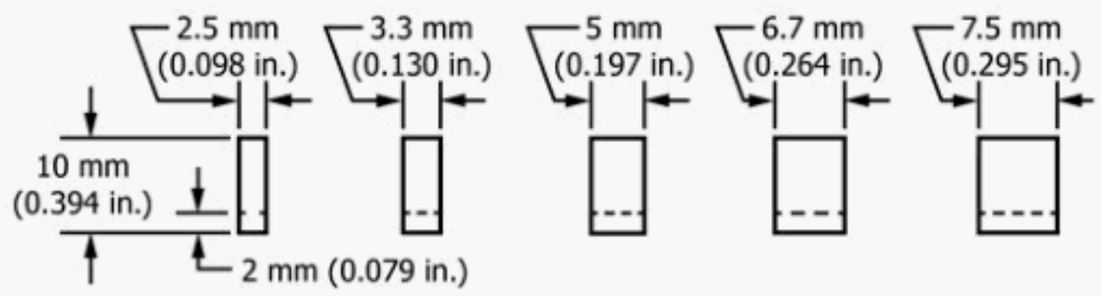

NOTE 2—On subsize specimens, all dimensions and tolerances of the standard specimen remain constant with the exception of the width, which varies as shown above and for which the tolerance shall be ±1 %.

(*b*) Standard Subsize Specimens

FIG. 11 Charpy (Simple Beam) Impact Test Specimens

23.2.2.4 Tolerances for standard subsize specimens are shown in Fig. 11. Standard subsize test specimen sizes are: 10 × 7.5 mm, 10 × 6.7 mm, 10 × 5 mm, 10 × 3.3 mm, and 10 × 2.5 mm.

23.2.2.5 Notch the narrow face of the standard subsize specimens so that the notch is perpendicular to the 10 mm wide face.

23.3 *Notch Preparation*—The machining (for example, milling, broaching, or grinding) of the notch is critical, as minor deviations in both notch radius and profile, or tool marks at the bottom of the notch may result in variations in test data, particularly in materials with low-impact energy absorption. (see Annex A5).

24. Calibration

24.1 *Accuracy and Sensitivity*—Calibrate and adjust Charpy impact machines in accordance with the requirements of Test Methods E23.

25. Conditioning—Temperature Control

25.1 When a specific test temperature is required by the specification or purchaser, control the temperature of the heating or cooling medium within ±2 °F (1 °C).

NOTE 17—For some steels there may not be a need for this restricted temperature, for example, austenitic steels.

NOTE 18—Because the temperature of a testing laboratory often varies from 60 to 90 °F (15 to 32 °C) a test conducted at "room temperature" might be conducted at any temperature in this range.

26. Procedure

26.1 *Temperature:*

26.1.1 Condition the specimens to be broken by holding them in the medium at test temperature for at least 5 min in liquid media and 30 min in gaseous media.

26.1.2 Prior to each test, maintain the tongs for handling test specimens at the same temperature as the specimen so as not to affect the temperature at the notch.

26.2 *Positioning and Breaking Specimens:*

26.2.1 Carefully center the test specimen in the anvil and release the pendulum to break the specimen.

26.2.2 If the pendulum is not released within 5 s after removing the specimen from the conditioning medium, do not break the specimen. Return the specimen to the conditioning medium for the period required in 26.1.1.

26.3 *Recovering Specimens*—In the event that fracture appearance or lateral expansion must be determined, recover the matched pieces of each broken specimen before breaking the next specimen.

26.4 *Individual Test Values:*

26.4.1 *Impact Energy*—Record the impact energy absorbed to the nearest ft·lbf (J).

26.4.2 *Fracture Appearance:*

26.4.2.1 Determine the percentage of shear fracture area by any of the following methods:

(1) Measure the length and width of the brittle portion of the fracture surface, as shown in Fig. 13 and determine the percent shear area from either Table 7 or Table 8 depending on the units of measurement.

(2) Compare the appearance of the fracture of the specimen with a fracture appearance chart as shown in Fig. 14.

(3) Magnify the fracture surface and compare it to a precalibrated overlay chart or measure the percent shear fracture area by means of a planimeter.

(4) Photograph the fractured surface at a suitable magnification and measure the percent shear fracture area by means of a planimeter.

26.4.2.2 Determine the individual fracture appearance values to the nearest 5 % shear fracture and record the value.

26.4.3 *Lateral Expansion:*

26.4.3.1 Lateral expansion is the increase in specimen width, measured in thousandths of an inch (mils), on the compression side, opposite the notch of the fractured Charpy V-notch specimen as shown in Fig. 15.

26.4.3.2 Examine each specimen half to ascertain that the protrusions have not been damaged by contacting the anvil, machine mounting surface, and so forth. Discard such samples since they may cause erroneous readings.

26.4.3.3 Check the sides of the specimens perpendicular to the notch to ensure that no burrs were formed on the sides during impact testing. If burrs exist, remove them carefully by rubbing on emery cloth or similar abrasive surface, making sure that the protrusions being measured are not rubbed during the removal of the burr.

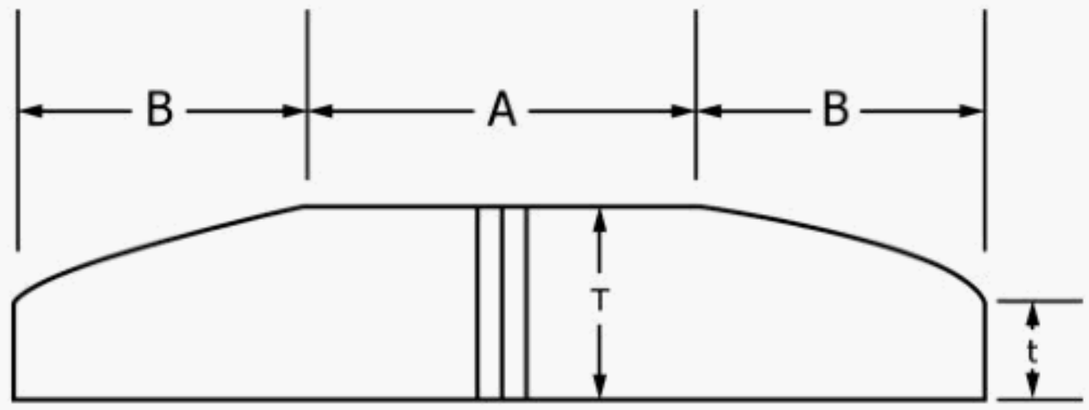

Dimension	Description	Requirement
A	Machined Surface	28 mm Minimum
B	Original OD Surface	13.5 mm Maximum
T	Specimen Thickness	Figure 11
t	End Thickness	½ T Minimum

FIG. 12 Tubular Impact Specimen Containing Original OD Surface

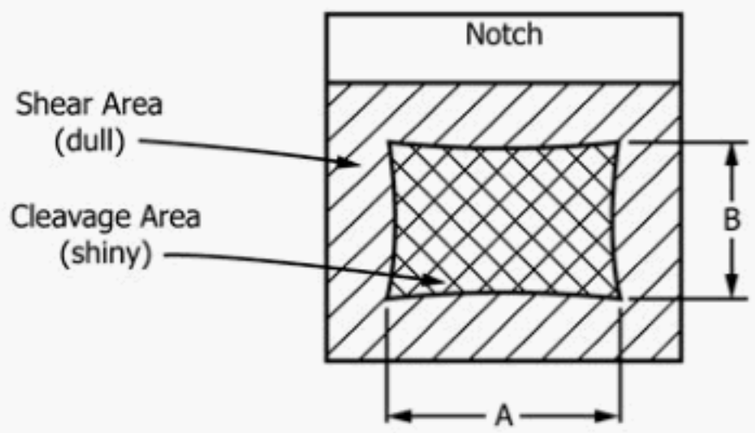

NOTE 1—Measure average dimensions *A* and *B* to the nearest 0.02 in. or 0.5 mm.
NOTE 2—Determine the percent shear fracture using Table 7 or Table 8.

FIG. 13 Determination of Percent Shear Fracture

TABLE 7 Percent Shear for Measurements Made in Inches

NOTE 1—Since this table is set up for finite measurements or dimensions *A* and *B*, 100 % shear is to be reported when either *A* or *B* is zero.

Dimension *B*, in.	Dimension *A*, in.																
	0.05	0.10	0.12	0.14	0.16	0.18	0.20	0.22	0.24	0.26	0.28	0.30	0.32	0.34	0.36	0.38	0.40
0.05	98	96	95	94	94	93	92	91	90	90	89	88	87	86	85	85	84
0.10	96	92	90	89	87	85	84	82	81	79	77	76	74	73	71	69	68
0.12	95	90	88	86	85	83	81	79	77	75	73	71	69	67	65	63	61
0.14	94	89	86	84	82	80	77	75	73	71	68	66	64	62	59	57	55
0.16	94	87	85	82	79	77	74	72	69	67	64	61	59	56	53	51	48
0.18	93	85	83	80	77	74	72	68	65	62	59	56	54	51	48	45	42
0.20	92	84	81	77	74	72	68	65	61	58	55	52	48	45	42	39	36
0.22	91	82	79	75	72	68	65	61	57	54	50	47	43	40	36	33	29
0.24	90	81	77	73	69	65	61	57	54	50	46	42	38	34	30	27	23
0.26	90	79	75	71	67	62	58	54	50	46	41	37	33	29	25	20	16
0.28	89	77	73	68	64	59	55	50	46	41	37	32	28	23	18	14	10
0.30	88	76	71	66	61	56	52	47	42	37	32	27	23	18	13	9	3
0.31	88	75	70	65	60	55	50	45	40	35	30	25	20	18	10	5	0

26.4.3.4 Measure the amount of expansion on each side of each half relative to the plane defined by the undeformed portion of the side of the specimen using a gauge similar to that shown in Figs. 16 and 17.

26.4.3.5 Since the fracture path seldom bisects the point of maximum expansion on both sides of a specimen, the sum of the larger values measured for each side is the value of the test. Arrange the halves of one specimen so that compression sides are facing each other. Using the gauge, measure the protrusion on each half specimen, ensuring that the same side of the specimen is measured. Measure the two broken halves individually. Repeat the procedure to measure the protrusions on the opposite side of the specimen halves. The larger of the two values for each side is the expansion of that side of the specimen.

26.4.3.6 Measure the individual lateral expansion values to the nearest mil (0.025 mm) and record the values.

26.4.3.7 With the exception described as follows, any specimen that does not separate into two pieces when struck by a single blow shall be reported as unbroken. The lateral expansion of an unbroken specimen can be reported as broken if the specimen can be separated by pushing the hinged halves together once and then pulling them apart without further fatiguing the specimen, and the lateral expansion measured for

TABLE 8 Percent Shear for Measurements Made in Millimetres

NOTE 1—Since this table is set up for finite measurements or dimensions *A* and *B*, 100 % shear is to be reported when either *A* or *B* is zero.

Dimension *B*, mm	Dimension *A*, mm																		
	1.0	1.5	2.0	2.5	3.0	3.5	4.0	4.5	5.0	5.5	6.0	6.5	7.0	7.5	8.0	8.5	9.0	9.5	10
1.0	99	98	98	97	96	96	95	94	94	93	92	92	91	91	90	89	89	88	88
1.5	98	97	96	95	94	93	92	92	91	90	89	88	87	86	85	84	83	82	81
2.0	98	96	95	94	92	91	90	89	88	86	85	84	82	81	80	79	77	76	75
2.5	97	95	94	92	91	89	88	86	84	83	81	80	78	77	75	73	72	70	69
3.0	96	94	92	91	89	87	85	83	81	79	77	76	74	72	70	68	66	64	62
3.5	96	93	91	89	87	85	82	80	78	76	74	72	69	67	65	63	61	58	56
4.0	95	92	90	88	85	82	80	77	75	72	70	67	65	62	60	57	55	52	50
4.5	94	92	89	86	83	80	77	75	72	69	66	63	61	58	55	52	49	46	44
5.0	94	91	88	85	81	78	75	72	69	66	62	59	56	53	50	47	44	41	37
5.5	93	90	86	83	79	76	72	69	66	62	59	55	52	48	45	42	38	35	31
6.0	92	89	85	81	77	74	70	66	62	59	55	51	47	44	40	36	33	29	25
6.5	92	88	84	80	76	72	67	63	59	55	51	47	43	39	35	31	27	23	19
7.0	91	87	82	78	74	69	65	61	56	52	47	43	39	34	30	26	21	17	12
7.5	91	86	81	77	72	67	62	58	53	48	44	39	34	30	25	20	16	11	6
8.0	90	85	80	75	70	65	60	55	50	45	40	35	30	25	20	15	10	5	0

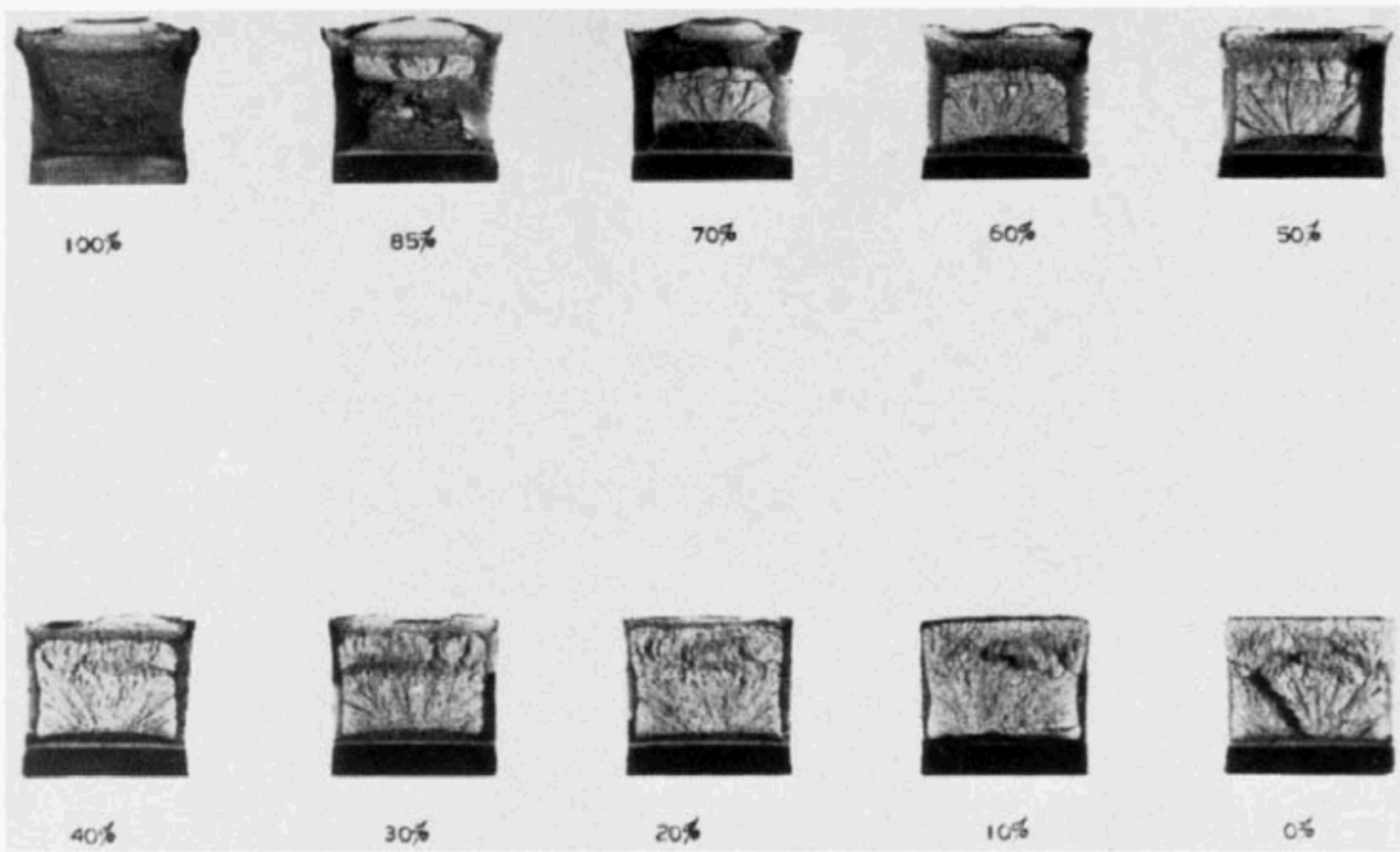

FIG. 14 Fracture Appearance Charts and Percent Shear Fracture Comparator

the unbroken specimen (prior to bending) is equal to or greater than that measured for the separated halves. In the case where a specimen cannot be separated into two halves, the lateral expansion can be measured as long as the shear lips can be accessed without interference from the hinged ligament that has been deformed during testing.

27. Interpretation of Test Result

27.1 When the acceptance criterion of any impact test is specified to be a minimum average value at a given temperature, the test result shall be the average (arithmetic mean rounded to the nearest ft-lbf (J)) of the individual test values of three specimens from one test location.

27.1.1 When a minimum average test result is specified:

27.1.1.1 The test result is acceptable when all of the below are met:

(1) The test result equals or exceeds the specified minimum average (given in the specification),

(2) The individual test value for not more than one specimen measures less than the specified minimum average, and

(3) The individual test value for any specimen measures not less than two-thirds of the specified minimum average.

27.1.1.2 If the acceptance requirements of 27.1.1.1 are not met, perform one retest of three additional specimens from the same test location. Each individual test value of the retested specimens shall be equal to or greater than the specified minimum average value.

27.2 *Test Specifying a Minimum Transition Temperature:*

27.2.1 *Determination of Transition Temperature:*

27.2.1.1 Break one specimen at each of a series of temperatures above and below the anticipated transition temperature

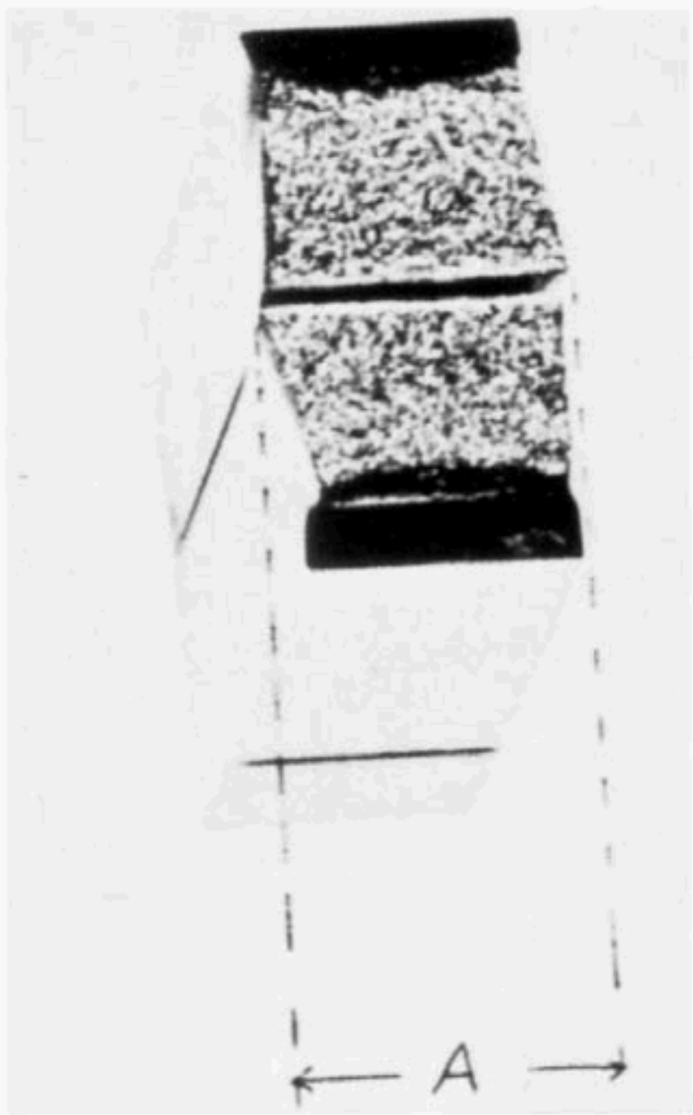

FIG. 15 Halves of Broken Charpy V-notch Impact Specimen Joined for Measurement of Lateral Expansion, Dimension *A*

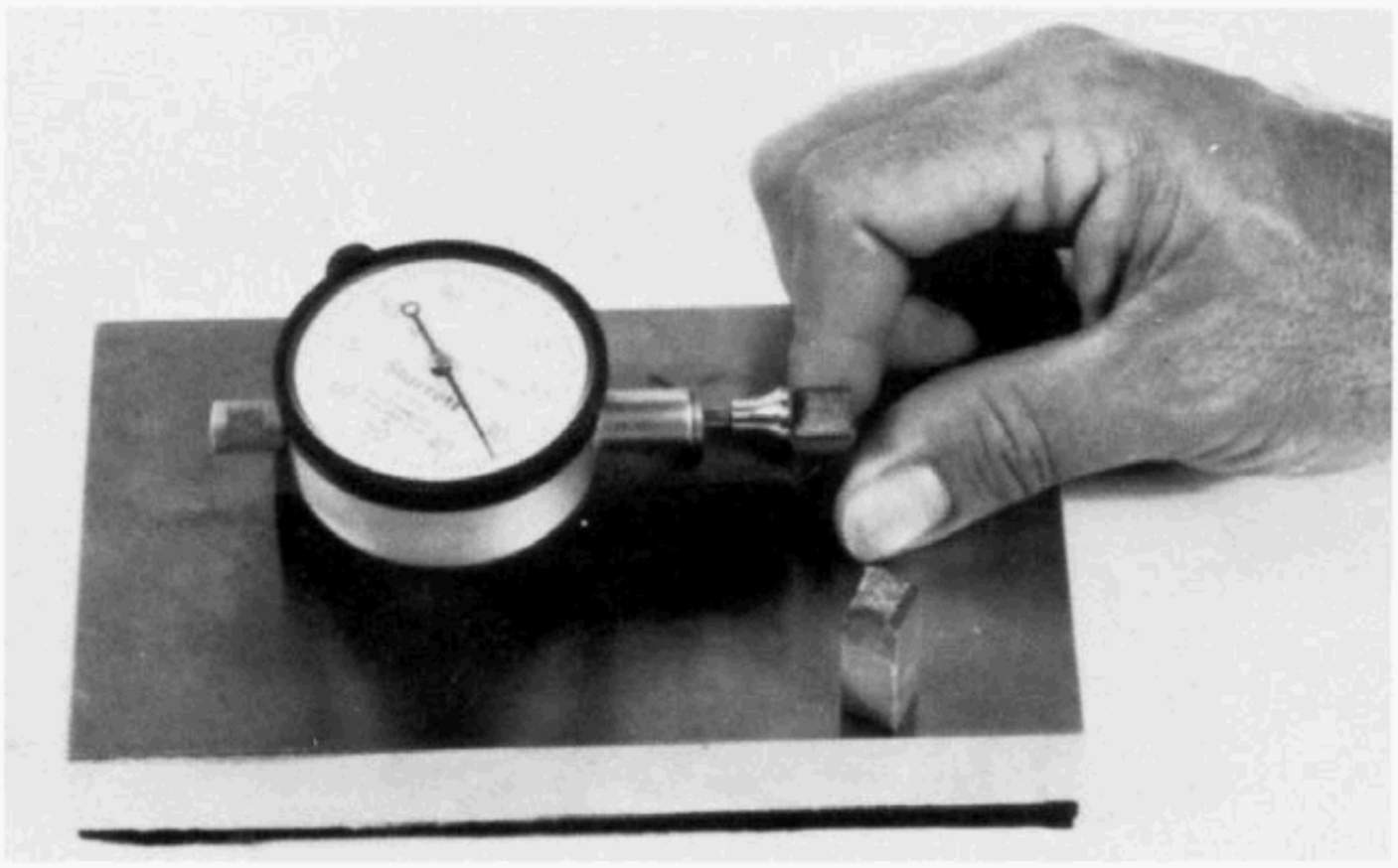

FIG. 16 Lateral Expansion Gauge for Charpy Impact Specimens

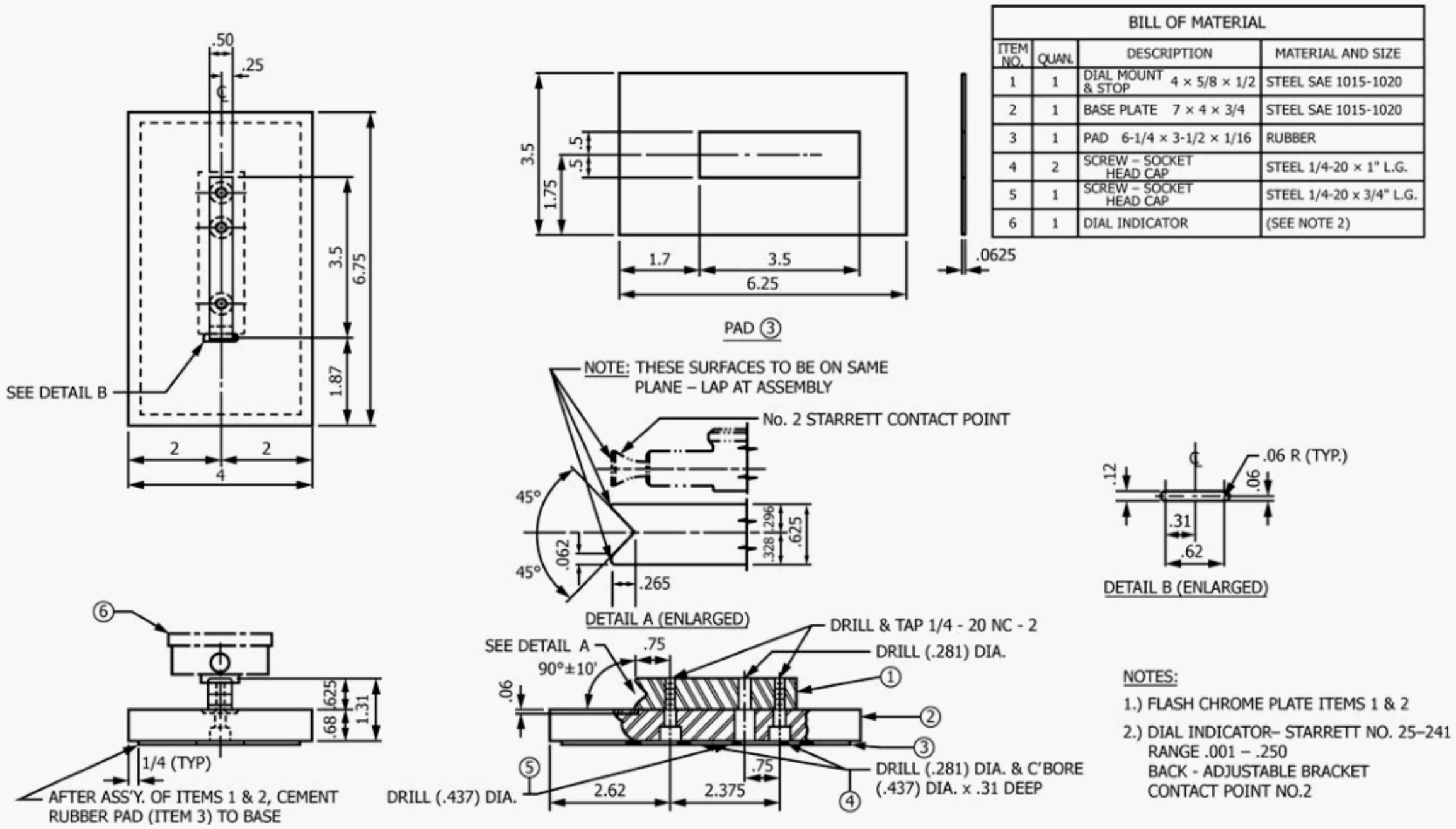

BILL OF MATERIAL			
ITEM NO.	QUAN.	DESCRIPTION	MATERIAL AND SIZE
1	1	DIAL MOUNT & STOP 4 × 5/8 × 1/2	STEEL SAE 1015-1020
2	1	BASE PLATE 7 × 4 × 3/4	STEEL SAE 1015-1020
3	1	PAD 6-1/4 × 3-1/2 × 1/16	RUBBER
4	2	SCREW – SOCKET HEAD CAP	STEEL 1/4-20 × 1" L.G.
5	1	SCREW – SOCKET HEAD CAP	STEEL 1/4-20 x 3/4" L.G.
6	1	DIAL INDICATOR	(SEE NOTE 2)

FIG. 17 Assembly and Details for Lateral Expansion Gauge

using the procedures in Section 26. Record each test temperature to the nearest 1 °F (0.5 °C).

27.2.1.2 Plot the individual test results (ft·lbf or percent shear) as the ordinate versus the corresponding test temperature as the abscissa and construct a best-fit curve through the plotted data points.

27.2.1.3 If transition temperature is specified as the temperature at which a test value is achieved, determine the temperature at which the plotted curve intersects the specified test value by graphical interpolation (extrapolation is not permitted). Record this transition temperature to the nearest 5 °F (3 °C). If the tabulated test results clearly indicate a transition temperature lower than specified, it is not necessary to plot the data. Report the lowest test temperature for which test value exceeds the specified value.

27.2.1.4 Accept the test result if the determined transition temperature is equal to or lower than the specified value.

27.2.1.5 If the determined transition temperature is higher than the specified value, but not more than 20 °F (12 °C) higher than the specified value, test sufficient samples in accordance with Section 26 to plot two additional curves. Accept the test results if the temperatures determined from both additional tests are equal to or lower than the specified value.

27.3 When subsize specimens are permitted or necessary, or both, modify the specified test requirement according to Table 9 or test temperature according to ASME Boiler and Pressure Vessel Code, Table UG-84.2, or both. Greater energies or lower test temperatures may be agreed upon by purchaser and supplier.

28. Records

28.1 The test record should contain the following information as appropriate:

28.1.1 Full description of material tested (that is, specification number, grade, class or type, size, heat number).

28.1.2 Specimen orientation with respect to the material axis.

28.1.3 Specimen size.

28.1.4 Test temperature and individual test value for each specimen broken, including initial tests and retests.

28.1.5 Test results.

28.1.6 Transition temperature and criterion for its determination, including initial tests and retests.

TABLE 9 Charpy V-notch Test Acceptance Criteria for Various Sub-size Specimens[A,B,C]

Full Size, 10 by 10 mm		¾ Size, 10 by 7.5 mm		⅔ Size, 10 by 6.7 mm		½ Size, 10 by 5 mm		⅓ Size, 10 by 3.3 mm		¼ Size, 10 by 2.5 mm	
ft·lbf	[J]	ft·lbf	[J]	ft·lbf	[J]	ft·lbf	[J]	ft·lbf	[J]	ft·lbf	[J]
75	[102]	56	[76]	50	[68]	38	[52]	25	[34]	19	[26]
70	[95]	53	[72]	47	[64]	35	[48]	23	[31]	18	[24]
65	[88]	49	[67]	44	[60]	33	[45]	21	[29]	16	[22]
60	[82]	45	[61]	40	[54]	30	[41]	20	[27]	15	[20]
55	[75]	41	[56]	37	[50]	28	[38]	18	[24]	14	[19]
50	[68]	38	[52]	34	[46]	25	[34]	17	[23]	13	[18]
45	[61]	34	[46]	30	[41]	23	[31]	15	[20]	11	[15]
40	[54]	30	[41]	27	[37]	20	[27]	13	[18]	10	[14]
35	[48]	26	[35]	23	[31]	18	[24]	12	[16]	9	[12]
30	[41]	22	[30]	20	[27]	15	[20]	10	[14]	8	[11]
25	[34]	19	[26]	17	[23]	12	[16]	8	[11]	6	[8]
20	[27]	15	[20]	13	[18]	10	[14]	7	[10]	5	[7]
16	[22]	12	[16]	11	[15]	8	[11]	5	[7]	4	[5]
15	[20]	11	[15]	10	[14]	8	[11]	5	[7]	4	[5]
13	[18]	10	[14]	9	[12]	6	[8]	4	[5]	3	[4]
12	[16]	9	[12]	8	[11]	6	[8]	4	[5]	3	[4]
10	[14]	8	[11]	7	[10]	5	[7]	3	[4]	2	[3]
7	[10]	5	[7]	5	[7]	4	[5]	2	[3]	2	[3]

[A] Care must be taken when using Table 9 for the conversion of subsize specimen absorbed energy results to those values that may be expected from full size Charpy specimens. The use of conversion values should only be applied when both specimens types (full-size and sub-size) are in the same fracture regime (in other words. a lower shelf, transition, or upper shelf) at the test temperature for the material under investigation. In particular test specimens <5 mm can exhibit variable absorbed energy values (NIST Technical Note 1858). **(1)**

[B] Limit based upon presentation by Kim Wallin, VTT, "Sub-sized CVN Specimen Conversion Methodology 4, Slide #10," which shows a common relationship for sub-sized specimens up to 75 ft·lbf (102J). **(2)**

[C] Analysis of Data from NIST Note 1858 by J. A. Griffin, UAB, ASTM A01.13 Task Group meeting, San Antonio, TX 5.4.16. **(1)**

29. Report

29.1 The specification should designate the information to be reported.

IZOD IMPACT TEST

30. Procedure

30.1 Testing equipment and methods are given in Test Methods E23.

31. Precision and Bias

31.1 The precision and bias of these test methods for measuring mechanical properties are essentially as specified in Test Methods E8/E8M, E10, E18, and E23.

32. Keywords

32.1 bend test; Brinell hardness; Charpy impact test; elongation; FATT (Fracture Appearance Transition Temperature); hardness test; Izod impact test; portable hardness; reduction of area; Rockwell hardness; tensile strength; tension test; yield strength

ANNEXES

(Mandatory Information)

A1. STEEL BAR PRODUCTS

A1.1 Scope

A1.1.1 This annex contains testing requirements for Steel Bar Products that are specific to the product. The requirements contained in this annex are supplementary to those found in the general section of this specification. In the case of conflict between requirements provided in this annex and those found in the general section of this specification, the requirements of this annex shall prevail. In the case of conflict between requirements provided in this annex and requirements found in product specifications, the requirements found in the product specification shall prevail.

A1.2 Orientation of Test Specimens

A1.2.1 Carbon and alloy steel bars and bar-size shapes, due to their relatively small cross-sectional dimensions, are customarily tested in the longitudinal direction. In special cases where size permits and the fabrication or service of a part justifies testing in a transverse direction, the selection and location of test or tests are a matter of agreement between the manufacturer and the purchaser.

A1.3 Tension Test

A1.3.1 *Carbon Steel Bars*—Carbon steel bars are not commonly specified to tensile requirements in the as-rolled condition for sizes of rounds, squares, hexagons, and octagons under ½ in. (13 mm) in diameter or distance between parallel faces nor for other bar-size sections, other than flats, less than 1 in.^{2} (645 mm^2) in cross-sectional area.

A1.3.2 *Alloy Steel Bars*—Alloy steel bars are usually not tested in the as-rolled condition.

A1.3.3 When tension tests are specified, the practice for selecting test specimens for hot-rolled and cold-finished steel bars of various sizes shall be in accordance with Table A1.1, unless otherwise specified in the product specification.

A1.4 Bend Test

A1.4.1 When bend tests are specified, the recommended practice for hot-rolled and cold-finished steel bars shall be in accordance with Table A1.2.

A1.5 Hardness Test

A1.5.1 *Hardness Tests on Bar Products* (flats, rounds, squares, hexagons, and octagons) are conducted on the surface after a minimum removal of 0.015 in. to provide for accurate

TABLE A1.1 Practices for Selecting Tension Test Specimens for Steel Bar Products

NOTE 1—For bar sections where it is difficult to determine the cross-sectional area by simple measurement, the area in square inches may be calculated by dividing the weight per linear inch of specimen in pounds by 0.2833 (weight of 1 in.^{3} of steel) or by dividing the weight per linear foot of specimen by 3.4 (weight of steel 1 in. square and 1 ft long).

Thickness, in. (mm)	Width, in. (mm)	Hot-Rolled Bars	Cold-Finished Bars
		Flats	
Under ⅝ (16)	Up to 1½ (38), incl	Full section by 8-in. (200 mm) gauge length (Fig. 3).	Mill reduced section to 2-in. (50 mm) gauge length and approximately 25 % less than test specimen width.
	Over 1½ (38)	Full section, or mill to 1½ in. (38 mm) wide by 8-in. (200 mm) gauge length (Fig. 3).	Mill reduced section to 2-in. gauge length and 1½ in. wide.
⅝ to 1½ (16 to 38), excl	Up to 1½ (38), incl	Full section by 8-in. gauge length or machine standard ½ by 2-in. (13 by 50 mm) gauge length specimen from center of section (Fig. 4).	Mill reduced section to 2-in. (50 mm) gauge length and approximately 25 % less than test specimen width or machine standard ½ by 2-in. (13 by 50 mm) gauge length specimen from center of section (Fig. 4).
	Over 1½ (38)	Full section, or mill 1½ in. (38 mm) width by 8-in. (200 mm) gauge length (Fig. 3) or machine standard ½ by 2-in. gauge (13 by 50 mm) gauge length specimen from midway between edge and center of section (Fig. 4).	Mill reduced section to 2-in. gauge length and 1½ in. wide or machine standard ½ by 2-in. gauge length specimen from midway between edge and center of section (Fig. 4).
1½ (38) and over		Full section by 8-in. (200 mm) gauge length, or machine standard ½ by 2-in. (13 by 50 mm) gauge length specimen from midway between surface and center (Fig. 4).	Machine standard ½ by 2-in. (13 by 50 mm) gauge length specimen from midway between surface and center (Fig. 4).

Rounds, Squares, Hexagons, and Octagons		
Diameter or Distance Between Parallel Faces, in. (mm)	Hot-Rolled Bars	Cold-Finished Bars
Under ⅝	Full section by 8-in. (200 mm) gauge length or machine to subsize specimen (Fig. 4).	Machine to sub-size specimen (Fig. 4).
⅝ to 1½ (16 to 38), excl	Full section by 8-in. (200 mm) gauge length or machine standard ½ in. by 2-in. (13 by 50 mm) gauge length specimen from center of section (Fig. 4).	Machine standard ½ in. by 2-in. gauge length specimen from center of section (Fig. 4).
1½ (38) and over	Full section by 8-in. (200 mm) gauge length or machine standard ½ in. by 2-in. (13 by 50 mm) gauge length specimen from midway between surface and center of section (Fig. 4).	Machine standard ½ in. by 2-in. (13 by 50 mm gauge length specimen from midway between surface and center of section (Fig. 4)).
Other Bar-size Sections		
All sizes	Full section by 8-in. (200 mm) gauge length or prepare test specimen 1½ in. (38 mm) wide (if possible) by 8-in. (200 mm) gauge length.	Mill reduced section to 2-in. (50 mm) gauge length and approximately 25 % less than test specimen width.

TABLE A1.2 Recommended Practice for Selecting Bend Test Specimens for Steel Bar Products

NOTE 1—The length of all specimens is to be not less than 6 in. (150 mm).

NOTE 2—The edges of the specimen may be rounded to a radius not exceeding 1/16 in. (1.6 mm).

Flats		
Thickness, in. (mm)	Width, in. (mm)	Recommended Size
Up to ½ (13), incl	Up to ¾ (19), incl	Full section.
	Over ¾ (19)	Full section or machine to not less than ot less than ¾ in. (19 mm) in width by thickness of specimen.
Over ½ (13)	All	Full section or machine to 1 by ½ in. (25 by 13 mm) specimen from midway between center and surface.

Rounds, Squares, Hexagons, and Octagons	
Diameter or Distance Between Parallel Faces, in. (mm)	Recommended Size
Up to 1½ (38), incl	Full section.
Over 1½ (38)	Machine to 1 by ½-in. (25 by 13 mm) specimen from midway between center and surface.

hardness penetration.

A2. STEEL TUBULAR PRODUCTS

A2.1 Scope

A2.1.1 This annex contains testing requirements for Steel Tubular Products that are specific to the product. The requirements contained in this annex are supplementary to those found in the general section of this specification. In the case of conflict between requirements provided in this annex and those found in the general section of this specification, the requirements of this annex shall prevail. In the case of conflict between requirements provided in this annex and requirements found in product specifications, the requirements found in the product specification shall prevail.

A2.1.2 Tubular shapes covered by this specification include, round, square, rectangular, and special shapes.

A2.2 Tension Test

A2.2.1 *Full-size Longitudinal Test Specimens:*

A2.2.1.1 As an alternative to the use of longitudinal strip test specimens or longitudinal round test specimens, tension test specimens of full-size tubular sections are used, provided that the testing equipment has sufficient capacity. Snug-fitting metal plugs should be inserted far enough in the end of such tubular specimens to permit the testing machine jaws to grip the specimens properly without crushing. A design that may be used for such plugs is shown in Fig. A2.1. The plugs shall not extend into that part of the specimen on which the elongation is measured (see Fig. A2.1). Care should be exercised to see that insofar as practicable, the load in such cases is applied axially. The length of the full-section specimen depends on the gauge length prescribed for measuring the elongation.

A2.2.1.2 Unless otherwise required by the product specification, the gauge length is 2 in. or 50 mm, except that for tubing having an outside diameter of ⅜ in. (9.5 mm) or less, it is customary for a gauge length equal to four times the outside

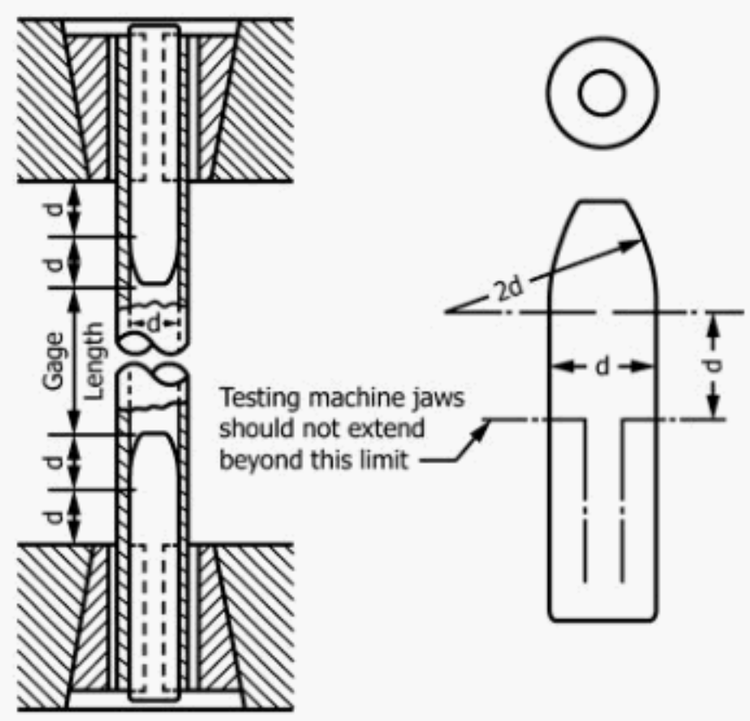

FIG. A2.1 Metal Plugs for Testing Tubular Specimens, Proper Location of Plugs in Specimen and of Specimen in Heads of Testing Machine

diameter to be used when elongation comparable to that obtainable with larger test specimens is required.

A2.2.1.3 To determine the cross-sectional area of the full-section specimen, measurements shall be recorded as the average or mean between the greatest and least measurements of the outside diameter and the average or mean wall thickness, to the nearest 0.001 in. (0.025 mm) and the cross-sectional area is determined by the following equation:

$$A = 3.1416t\,(D - t) \qquad \text{(A2.1)}$$

where:

A = sectional area, in.^{2}
D = outside diameter, in., and
t = thickness of tube wall, in.

NOTE A2.1—There exist other methods of cross-sectional area determination, such as by weighing of the specimens, which are equally

accurate or appropriate for the purpose.

A2.2.2 *Longitudinal Strip Test Specimens:*

A2.2.2.1 As an alternative to the use of full-size longitudinal test specimens or longitudinal round test specimens, longitudinal strip test specimens, obtained from strips cut from the tubular product as shown in Fig. A2.2 and machined to the dimensions shown in Fig. A2.3 are used. For welded structural tubing, such test specimens shall be from a location at least 90° from the weld; for other welded tubular products, such test specimens shall be from a location approximately 90° from the weld. Unless otherwise required by the product specification, the gauge length shall conform to dimension C in Fig. A2.3. The test specimens shall be tested using grips that are flat or have a surface contour corresponding to the curvature of the tubular product, or the ends of the test specimens shall be flattened without heating prior to the test specimens being tested using flat grips. The test specimen shown as specimen 4 in Fig. 3 shall be used, unless the capacity of the testing equipment or the dimensions and nature of the tubular product to be tested makes the use of specimen nos. 1, 2, or 3 necessary.

NOTE A2.2—An exact formula for calculating the cross-sectional area of specimens of the type shown in Fig. A2.3 taken from a circular tube is given in Test Methods E8/E8M.

A2.2.2.2 The width should be measured at each end of the gauge length to determine parallelism and also at the center. The thickness should be measured at the center and used with the center measurement of the width to determine the cross-sectional area. The center width dimension should be recorded to the nearest 0.005 in. (0.127 mm), and the thickness measurement to the nearest 0.001 in.

A2.2.3 *Transverse Strip Test Specimens:*

A2.2.3.1 In general, transverse tension tests are not recommended for tubular products, in sizes smaller than 8 in. in nominal diameter. When required, transverse tension test specimens may be taken from rings cut from ends of tubes or pipe as shown in Fig. A2.4. Flattening of the specimen may be done either after separating it from the tube as in Fig. A2.4 (*a*), or before separating it as in Fig. A2.4 (*b*), and may be done hot or cold; but if the flattening is done cold, the specimen may subsequently be normalized. Specimens from tubes or pipe for which heat treatment is specified, after being flattened either hot or cold, shall be given the same treatment as the tubes or pipe. For tubes or pipe having a wall thickness of less than ¾ in. (19 mm), the transverse test specimen shall be of the form and dimensions shown in Fig. A2.5 and either or both surfaces may be machined to secure uniform thickness. Specimens for transverse tension tests on welded steel tubes or pipe to determine strength of welds, shall be located perpendicular to the welded seams with the weld at about the middle of their length.

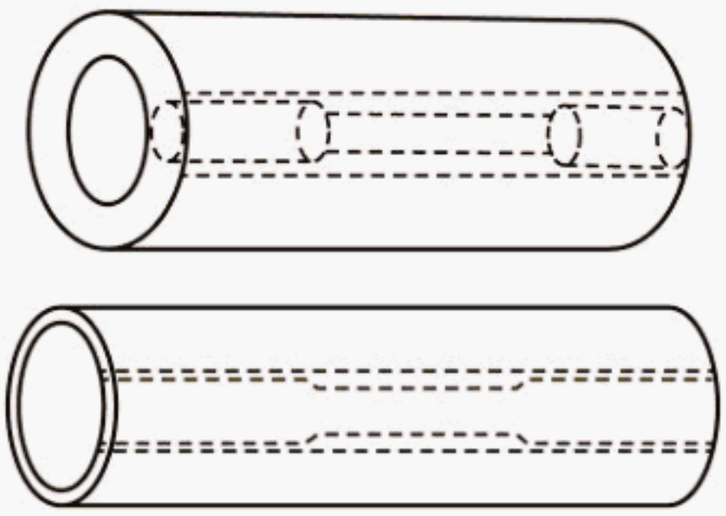

NOTE 1—The edges of the blank for the specimen shall be cut parallel to each other.

FIG. A2.2 Location of Longitudinal Tension—Test Specimens in Rings Cut From Tubular Products

A2.2.3.2 The width should be measured at each end of the gauge length to determine parallelism and also at the center. The thickness should be measured at the center and used with the center measurement of the width to determine the cross-sectional area. The center width dimension should be recorded to the nearest 0.005 in. (0.127 mm), and the thickness measurement to the nearest 0.001 in. (0.025 mm).

A2.2.4 *Round Test Specimens:*

A2.2.4.1 When provided for in the product specification, the round test specimen shown in Fig. 4 may be used.

A2.2.4.2 The diameter of the round test specimen is measured at the center of the specimen to the nearest 0.001 in. (0.025 mm).

A2.2.4.3 Small-size specimens proportional to standard, as shown in Fig. 4, may be used when it is necessary to test material from which the standard specimen cannot be prepared. Other sizes of small-size specimens may be used. In any such small-size specimen, it is important that the gauge length for measurement of elongation be four times the diameter of the specimen (see Note 5, Fig. 4). The elongation requirements for the round specimen 2-in. gauge length in the product specification shall apply to the small-size specimens.

A2.2.4.4 For transverse specimens, the section from which the specimen is taken shall not be flattened or otherwise deformed.

A2.2.4.5 Longitudinal test specimens are obtained from strips cut from the tubular product as shown in Fig. A2.2.

A2.3 Determination of Transverse Yield Strength, Hydraulic Ring-expansion Method

A2.3.1 Hardness tests are made on the outside surface, inside surface, or wall cross-section depending upon product-specification limitation. Surface preparation may be necessary to obtain accurate hardness values.

A2.3.2 A testing machine and method for determining the transverse yield strength from an annular ring specimen, have been developed and described in A2.3.3 – 9.1.2.

A2.3.3 A diagrammatic vertical cross-sectional sketch of the testing machine is shown in Fig. A2.6.

A2.3.4 In determining the transverse yield strength on this machine, a short ring (commonly 3 in. (76 mm) in length) test specimen is used. After the large circular nut is removed from the machine, the wall thickness of the ring specimen is determined and the specimen is telescoped over the oil resistant rubber gasket. The nut is then replaced, but is not turned down tight against the specimen. A slight clearance is left between the nut and specimen for the purpose of permitting free radial movement of the specimen as it is being tested. Oil under pressure is then admitted to the interior of the rubber gasket

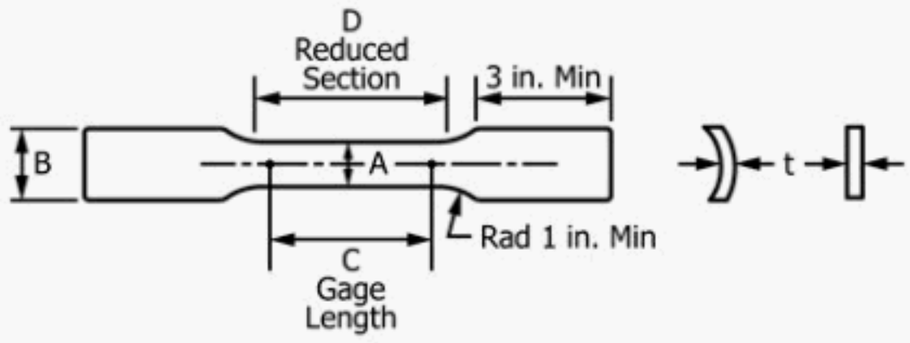

DIMENSIONS

Specimen No.	Dimensions, in.			
	A	*B*	*C*	*D*
1	½ ± 0.015	11/16 approximately	2 ± 0.005	2¼ min
2	¾ ± 0.031	1 approximately	2 ± 0.005	2¼ min
			4 ± 0.005	4½ min
3	1± 0.062	1½ approximately	2 ± 0.005	2¼ min
			4 ± 0.005	4½ min
4	1½ ± .125	2 approximately	2 ± 0.010	2¼ min
			4 ± 0.015	4½ min
			8 ± 0.020	9 min
5	¼ ± .002	⅜ approximately	1 ± 0.003	1 ¼ min

NOTE 1—Cross-sectional area may be calculated by multiplying *A* and *t*.

NOTE 2—The dimension *t* is the thickness of the test specimen as provided for in the applicable material specifications.

NOTE 3—The reduced section shall be parallel within 0.010 in. and may have a gradual taper in width from the ends toward the center, with the ends not more than 0.010 in. wider than the center.

NOTE 4—The ends of the specimen shall be symmetrical with the center line of the reduced section within 0.10 in.

NOTE 5—Metric equivalent: 1 in. = 25.4 mm.

NOTE 6—Specimens with sides parallel throughout their length are permitted, except for referee testing, provided: (*a*) the above tolerances are used; (*b*) an adequate number of marks are provided for determination of elongation; and (*c*) when yield strength is determined, a suitable extensometer is used. If the fracture occurs at a distance of less than 2*A* from the edge of the gripping device, the tensile properties determined may not be representative of the material. If the properties meet the minimum requirements specified, no further testing is required, but if they are less than the minimum requirements, discard the test and retest.

NOTE 7—Specimen 5 is intended for testing specimens removed from an in-service product. Specimen 5 shall not be used for conformance testing of new product. Acceptance criteria for elongation values obtained from 1 in. gauge length specimens shall be determined by agreement between the responsible parties.

FIG. A2.3 Dimensions and Tolerances for Longitudinal Strip Tension Test Specimens for Tubular Products

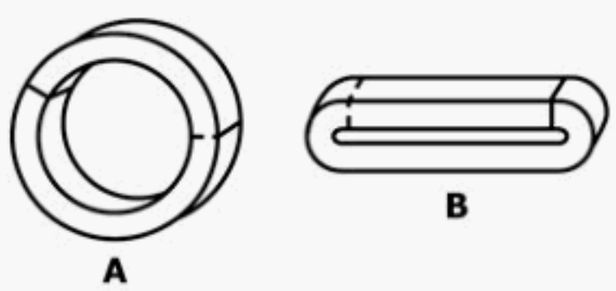

FIG. A2.4 Location of Transverse Tension Test Specimens in Ring Cut from Tubular Products.

through the pressure line under the control of a suitable valve. An accurately calibrated pressure gauge serves to measure oil pressure. Any air in the system is removed through the bleeder line. As the oil pressure is increased, the rubber gasket expands which in turn stresses the specimen circumferentially. As the pressure builds up, the lips of the rubber gasket act as a seal to prevent oil leakage. With continued increase in pressure, the ring specimen is subjected to a tension stress and elongates accordingly. The entire outside circumference of the ring specimen is considered as the gauge length and the strain is measured with a suitable extensometer which will be described later. When the desired total strain or extension under load is reached on the extensometer, the oil pressure in pounds per square inch is read and by employing Barlow's formula, the unit yield strength is calculated. The yield strength, thus determined, is a true result since the test specimen has not been

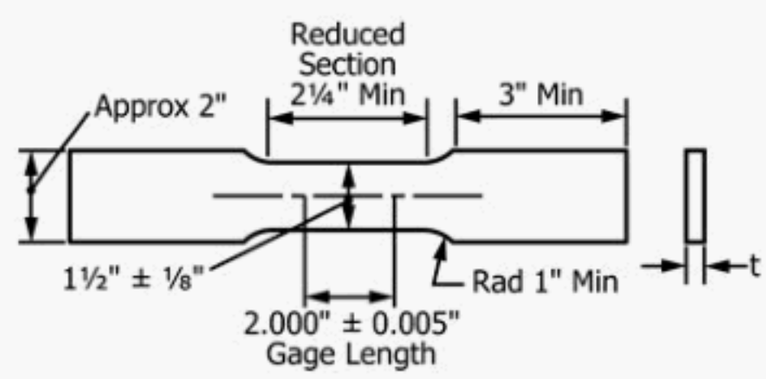

NOTE 1—The dimension *t* is the thickness of the test specimen as provided for in the applicable material specifications.

NOTE 2—The reduced section shall be parallel within 0.010 in. and may have a gradual taper in width from the ends toward the center, with the ends not more than 0.010 in. wider than the center.

NOTE 3—The ends of the specimen shall be symmetrical with the center line of the reduced section within 0.10 in.

NOTE 4—Metric equivalent: 1 in. = 25.6 mm.

FIG. A2.5 Transverse Tension Test Specimen Machined From Ring Cut from Tubular Products

cold worked by flattening and closely approximates the same condition as the tubular section from which it is cut. Further, the test closely simulates service conditions in pipe lines. One testing machine unit may be used for several different sizes of pipe by the use of suitable rubber gaskets and adapters.

NOTE A2.3—Barlow's formula may be stated two ways:

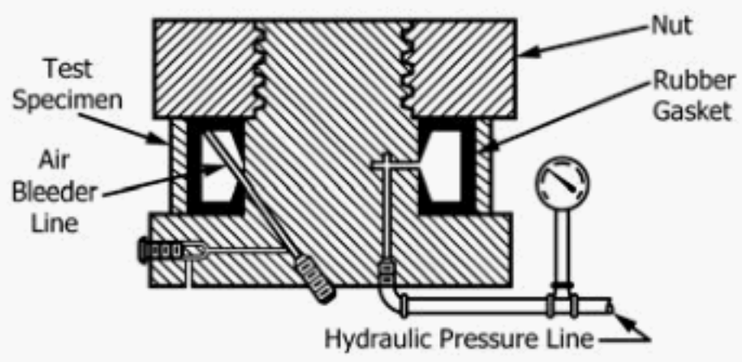

FIG. A2.6 Testing Machine for Determination of Transverse Yield Strength from Annular Ring Specimens

$$(1)\ P = 2St/D \qquad (A2.2)$$

$$(2)\ S = PD/2t \qquad (A2.3)$$

where:

P = internal hydrostatic pressure, psi,
S = unit circumferential stress in the wall of the tube produced by the internal hydrostatic pressure, psi,
t = thickness of the tube wall, in., and
D = outside diameter of the tube, in.

A2.3.5 A roller chain type extensometer which has been found satisfactory for measuring the elongation of the ring specimen is shown in Figs. A2.7 and A2.8. Fig. A2.7 shows the extensometer in position, but unclamped, on a ring specimen. A small pin, through which the strain is transmitted to and measured by the dial gauge, extends through the hollow threaded stud. When the extensometer is clamped, as shown in Fig. A2.8, the desired tension which is necessary to hold the instrument in place and to remove any slack, is exerted on the roller chain by the spring. Tension on the spring may be regulated as desired by the knurled thumb screw. By removing or adding rollers, the roller chain may be adapted for different sizes of tubular sections.

A2.4 Hardness Tests

A2.4.1 Hardness tests are made either on the outside or the inside surfaces on the end of the tube as appropriate.

A2.4.2 The standard 3000 kgf Brinell load may cause too much deformation in a thin-walled tubular specimen. In this case the 500 kgf load shall be applied, or inside stiffening by means of an internal anvil should be used. Brinell testing shall not be applicable to tubular products less than 2 in. (51 mm) in outside diameter, or less than 0.200 in. (5.1 mm) in wall thickness.

A2.4.3 The Rockwell hardness tests are normally made on the inside surface, a flat on the outside surface, or on the wall cross-section depending upon the product limitation. Rockwell hardness tests are not performed on tubes smaller than 5/16 in. (7.9 mm) in outside diameter, nor are they performed on the inside surface of tubes with less than 1/4 in. (6.4 mm) inside diameter. Rockwell hardness tests are not performed on annealed tubes with walls less than 0.065 in. (1.65 mm) thick or cold worked or heat treated tubes with walls less than 0.049 in. (1.24 mm) thick. For tubes with wall thicknesses less than those permitting the regular Rockwell hardness test, the Superficial Rockwell test is sometimes substituted. Transverse Rockwell hardness readings can be made on tubes with a wall thickness of 0.187 in. (4.75 mm) or greater. The curvature and the wall thickness of the specimen impose limitations on the

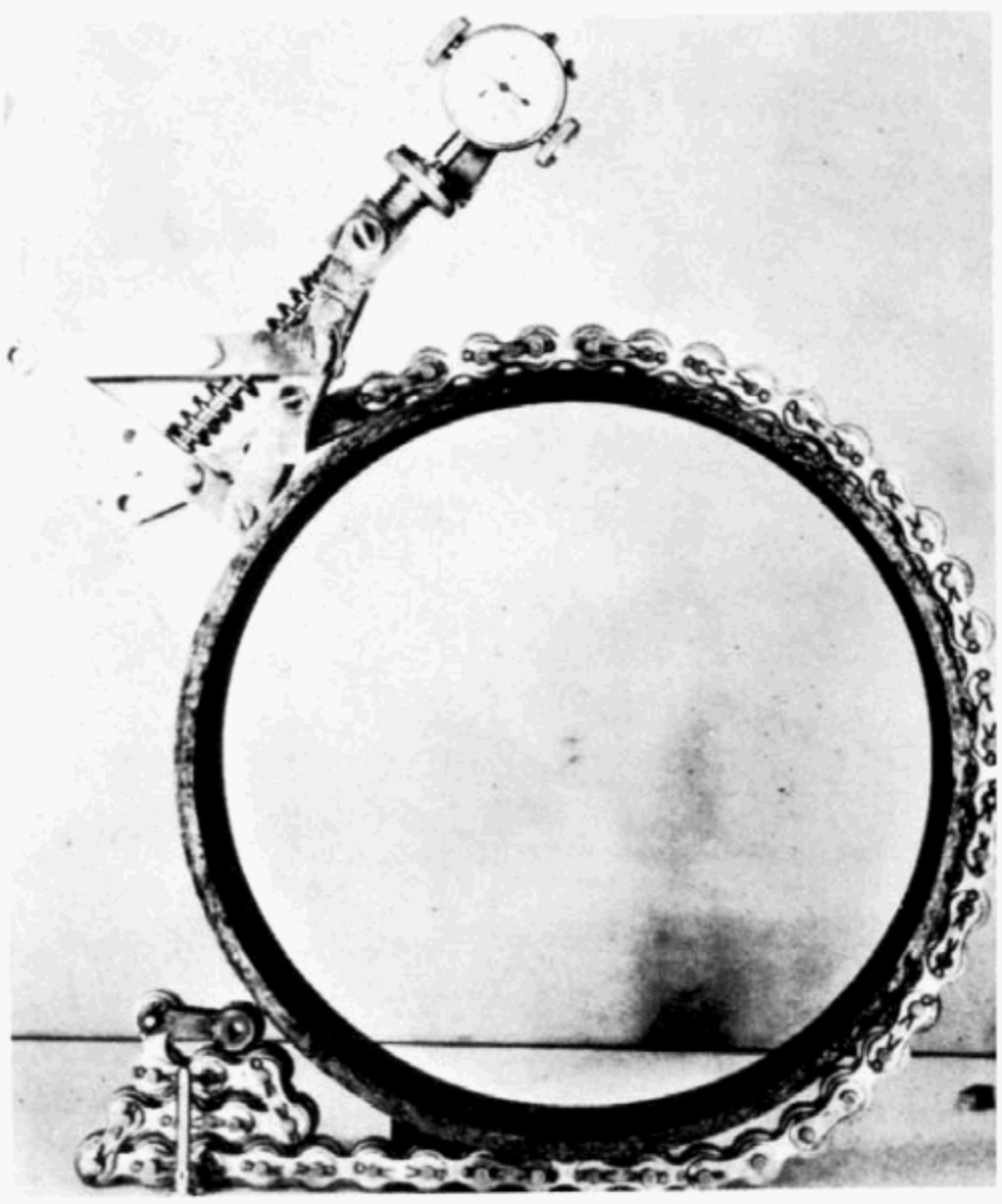

FIG. A2.7 Roller Chain Type Extensometer, Unclamped

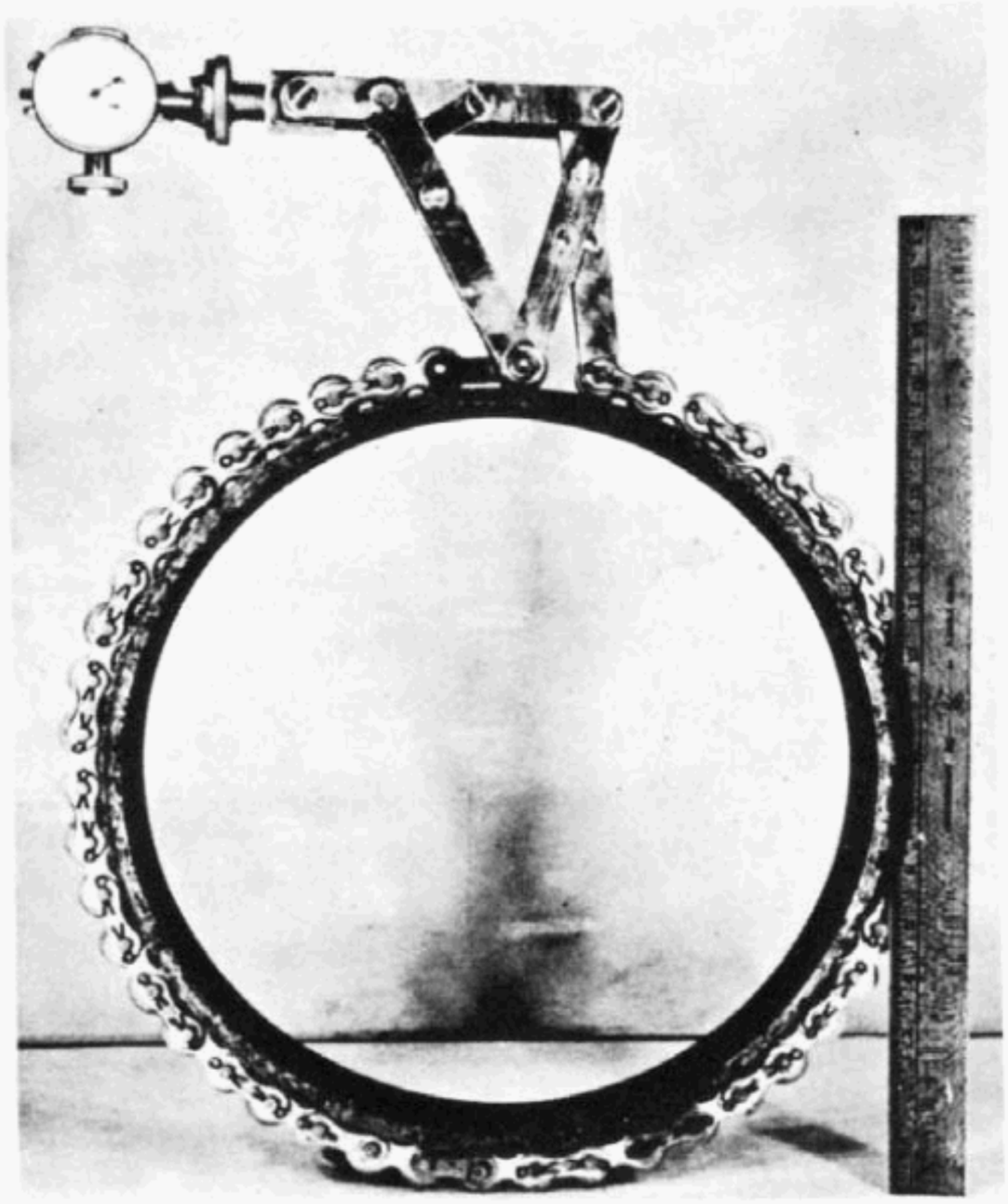

FIG. A2.8 Roller Chain Type Extensometer, Clamped

Rockwell hardness test. When a comparison is made between Rockwell determinations made on the outside surface and determinations made on the inside surface, adjustment of the readings will be required to compensate for the effect of curvature. The Rockwell B scale is used on all materials having an expected hardness range of B0 to B100. The Rockwell C scale is used on material having an expected hardness range of C20 to C68.

A2.4.4 Superficial Rockwell hardness tests are normally performed on the outside surface whenever possible and whenever excessive spring back is not encountered. Otherwise, the tests may be performed on the inside. Superficial Rockwell hardness tests shall not be performed on tubes with an inside diameter of less than ¼ in. (6.4 mm). The wall thickness limitations for the Superficial Rockwell hardness test are given in Tables A2.1 and A2.2.

A2.4.5 When the outside diameter, inside diameter, or wall thickness precludes the obtaining of accurate hardness values, tubular products shall be specified to tensile properties and so tested.

A2.5 Manipulating Tests

A2.5.1 The following tests are made to prove ductility of certain tubular products:

A2.5.1.1 *Flattening Test*—The flattening test as commonly made on specimens cut from tubular products is conducted by subjecting rings from the tube or pipe to a prescribed degree of flattening between parallel plates (see Fig. A2.4). The severity of the flattening test is measured by the distance between the parallel plates and is varied according to the dimensions of the tube or pipe. The flattening test specimen should not be less than 2½ in. (63.5 mm) in length and should be flattened cold to the extent required by the applicable material specifications.

A2.5.1.2 *Reverse Flattening Test*—The reverse flattening test is designed primarily for application to electric-welded tubing for the detection of lack of penetration or overlaps resulting from flash removal in the weld. The specimen consists of a length of tubing approximately 4 in. (102 mm) long which is split longitudinally 90° on each side of the weld. The sample is then opened and flattened with the weld at the point of maximum bend (see Fig. A2.9).

TABLE A2.1 Wall Thickness Limitations of Superficial Hardness Test on Annealed or Ductile Materials for Steel Tubular Products[A]
("T" Scale (1/16-in. Ball))

Wall Thickness, in. (mm)	Load, kgf
Over 0.050 (1.27)	45
Over 0.035 (0.89)	30
0.020 and over (0.51)	15

[A] The heaviest load recommended for a given wall thickness is generally used.

TABLE A2.2 Wall Thickness Limitations of Superficial Hardness Test on Cold Worked or Heat Treated Material for Steel Tubular Products[A]
("N" Scale (Diamond Penetrator))

Wall Thickness, in. (mm)	Load, kgf
Over 0.035 (0.89)	45
Over 0.025 (0.51)	30
0.015 and over (0.38)	15

[A] The heaviest load recommended for a given wall thickness is generally used.

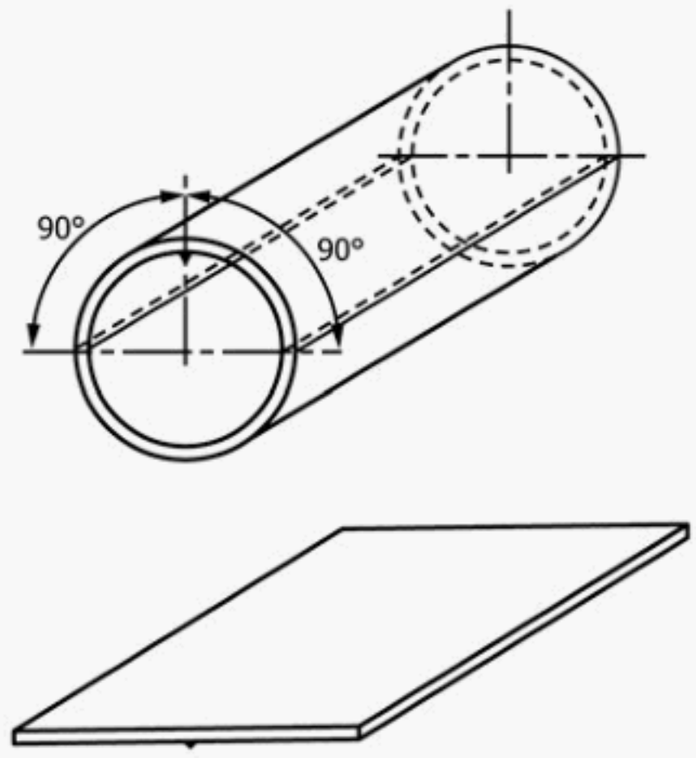

FIG. A2.9 Reverse Flattening Test

A2.5.1.3 *Crush Test*—The crush test, sometimes referred to as an upsetting test, is usually made on boiler and other pressure tubes, for evaluating ductility (see Fig. A2.10). The specimen is a ring cut from the tube, usually about 2½ in. (63.5 mm) long. It is placed on end and crushed endwise by hammer or press to the distance prescribed by the applicable material specifications.

A2.5.1.4 *Flange Test*—The flange test is intended to determine the ductility of boiler tubes and their ability to withstand the operation of bending into a tube sheet. The test is made on

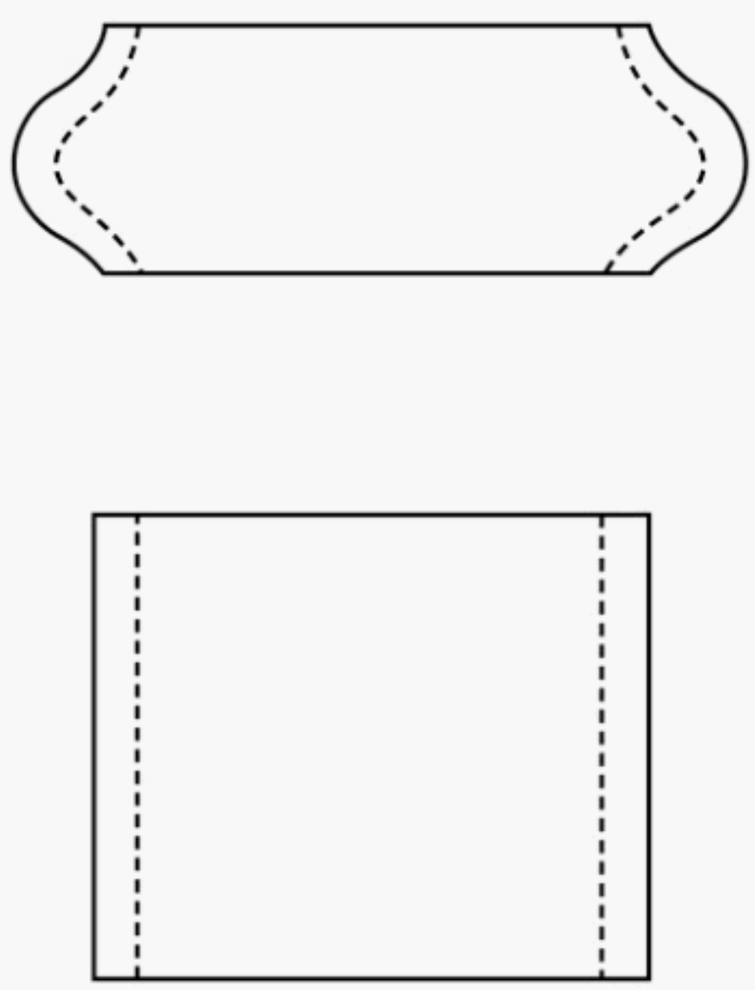

FIG. A2.10 Crush Test Specimen

a ring cut from a tube, usually not less than 4 in. (100 mm) long and consists of having a flange turned over at right angles to the body of the tube to the width required by the applicable material specifications. The flaring tool and die block shown in Fig. A2.11 are recommended for use in making this test.

A2.5.1.5 *Flaring Test*—For certain types of pressure tubes, an alternate to the flange test is made. This test consists of driving a tapered mandrel having a slope of 1 in 10 as shown in Fig. A2.12 (*a*) or a 60° included angle as shown in Fig. A2.12 (*b*) into a section cut from the tube, approximately 4 in. (100 mm) in length, and thus expanding the specimen until the inside diameter has been increased to the extent required by the applicable material specifications.

A2.5.1.6 *Bend Test*—For pipe used for coiling in sizes 2 in. and under a bend test is made to determine its ductility and the soundness of weld. In this test a sufficient length of full-size pipe is bent cold through 90° around a cylindrical mandrel having a diameter 12 times the nominal diameter of the pipe. For close coiling, the pipe is bent cold through 180° around a mandrel having a diameter 8 times the nominal diameter of the pipe.

A2.5.1.7 *Transverse Guided Bend Test of Welds*—This bend test is used to determine the ductility of fusion welds. The specimens used are approximately 1½ in. (38 mm) wide, at least 6 in. (152 mm) in length with the weld at the center, and are machined in accordance with Fig. A2.13 for face and root bend tests and in accordance with Fig. A2.14 for side bend tests. The dimensions of the plunger shall be as shown in Fig. A2.15 and the other dimensions of the bending jig shall be substantially as given in this same figure. A test shall consist of a face bend specimen and a root bend specimen or two side bend specimens. A face bend test requires bending with the inside surface of the pipe against the plunger; a root bend test requires bending with the outside surface of the pipe against the plunger; and a side bend test requires bending so that one of the side surfaces becomes the convex surface of the bend specimen.

(1) Failure of the bend test depends upon the appearance of cracks in the area of the bend, of the nature and extent described in the product specifications.

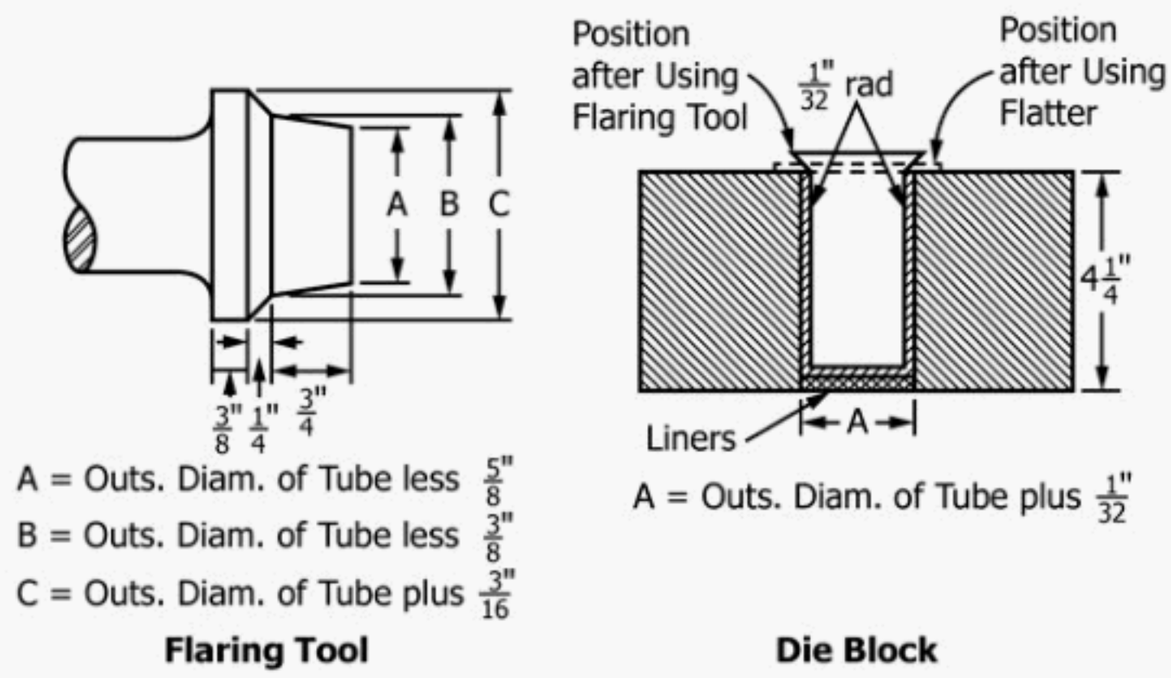

NOTE 1—Metric equivalent: 1 in. = 25.4 mm.

FIG. A2.11 Flaring Tool and Die Block for Flange Test

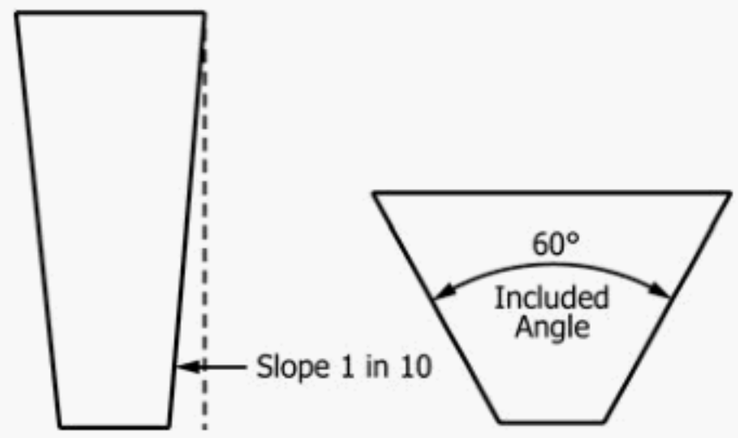

FIG. A2.12 Tapered Mandrels for Flaring Test

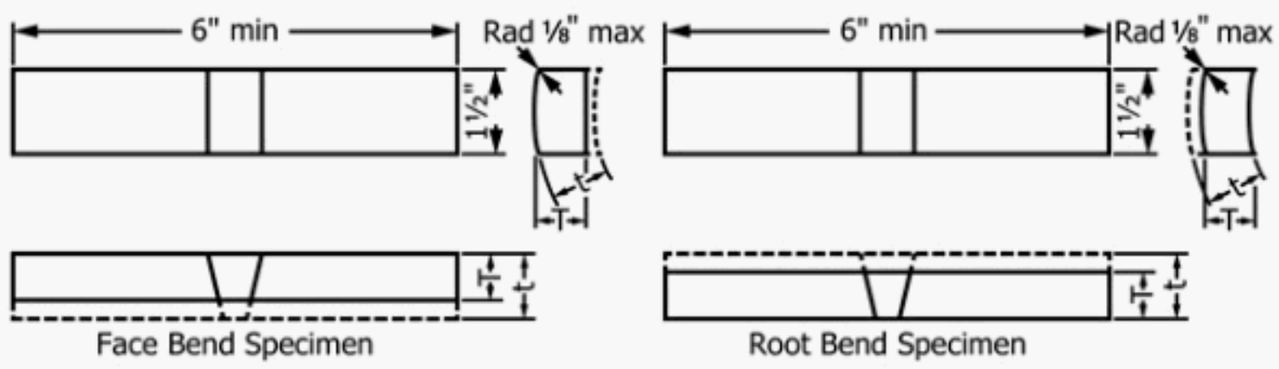

NOTE 1—Metric equivalent: 1 in. = 25.4 mm.

Pipe Wall Thickness (*t*), in.	Test Specimen Thickness, in.
Up to 3/8, incl	*t*
Over 3/8	3/8

FIG. A2.13 Transverse Face- and Root-bend Test Specimens

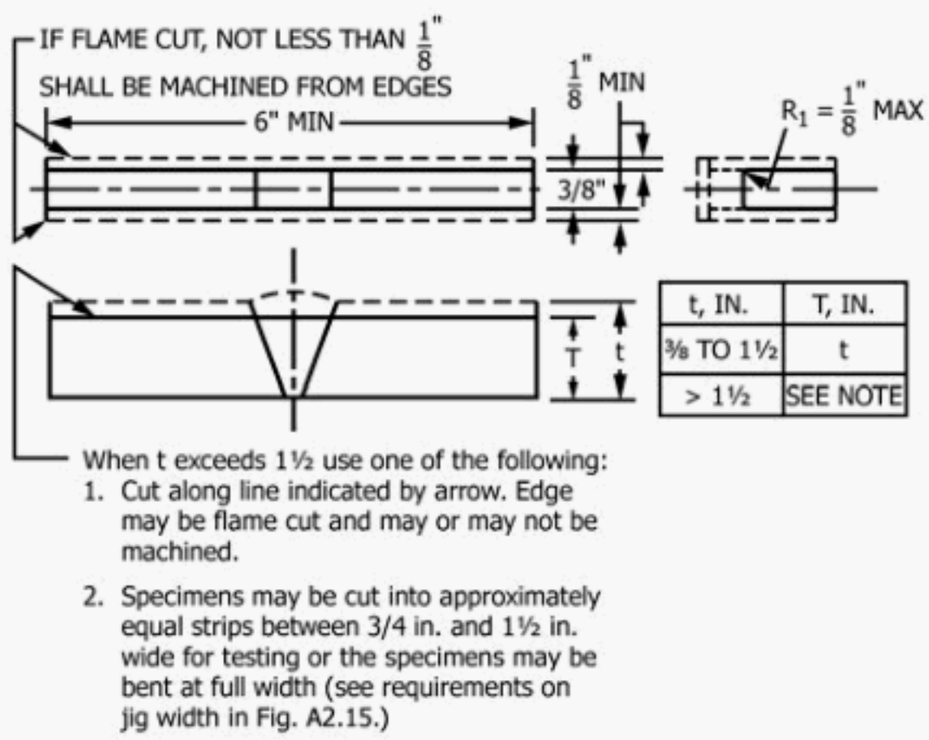

NOTE 1—Metric equivalent: 1 in. = 25.4 mm.

FIG. A2.14 Side-bend Specimen for Ferrous Materials

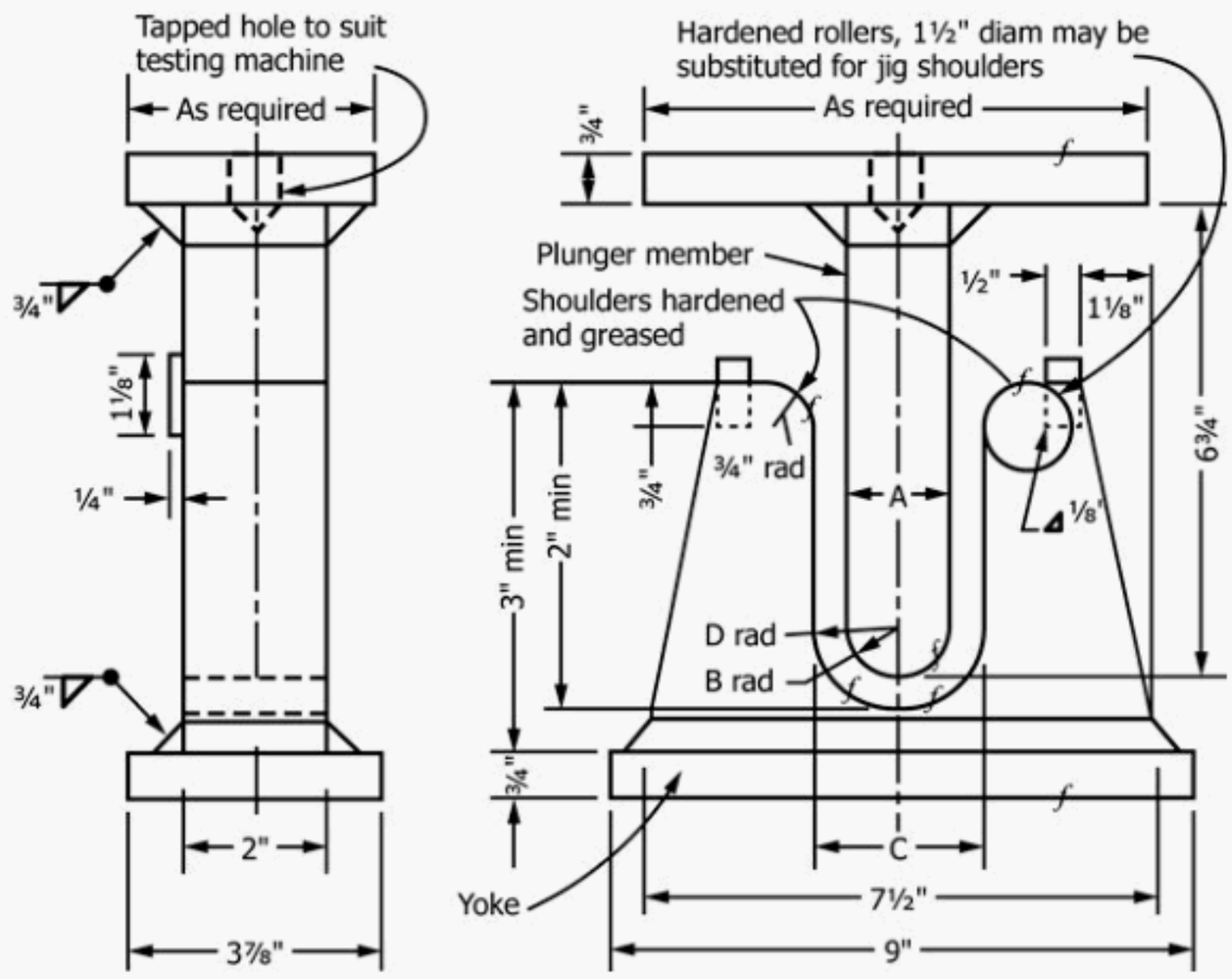

NOTE 1—Metric equivalent: 1 in. = 25.4 mm.

Test Specimen Thickness, in.	A	B	C	D	
⅜	1½	¾	2⅜	1³⁄₁₆	
t	$4t$	$2t$	$6t + ⅛$	$3t + 1/16$	
					Material
⅜	2½	1¼	3⅜	1¹¹⁄₁₆	Materials with a specified minimum tensile strength of 95 ksi or greater.
t	$6⅔\ t$	$3⅓\ t$	$8⅔\ t + ⅛$	$4½\ t + 1/16$	

FIG. A2.15 Guided-bend Test Jig

A3. STEEL FASTENERS

A3.1 Scope

A3.1.1 This annex contains testing requirements for Steel Fasteners that are specific to the product. The requirements contained in this annex are supplementary to those found in the general section of this specification. In the case of conflict between requirements provided in this annex and those found in the general section of this specification, the requirements of this annex shall prevail. In the case of conflict between requirements provided in this annex and requirements found in product specifications, the requirements found in the product specification shall prevail.

A3.1.2 These tests are set up to facilitate production control testing and acceptance testing with certain more precise tests to be used for arbitration in case of disagreement over test results.

A3.2 Tension Tests

A3.2.1 It is preferred that bolts be tested full size, and it is customary, when so testing bolts to specify a minimum ultimate load in pounds, rather than a minimum ultimate strength in pounds per square inch. Three times the bolt nominal diameter has been established as the minimum bolt length subject to the tests described in the remainder of this section. Subsections A3.2.1.1 – A3.2.1.6 apply when testing bolts full size. Subsection A3.2.1.4 shall apply where the individual product specifications permit the use of machined specimens.

A3.2.1.1 *Proof Load*—Due to particular uses of certain classes of bolts it is desirable to be able to stress them, while in use, to a specified value without obtaining any permanent set. To be certain of obtaining this quality the proof load is specified. The proof load test consists of stressing the bolt with a specified load which the bolt must withstand without permanent set. An alternate test which determines yield strength of a full size bolt is also allowed. Either of the following Methods, 1 or 2, may be used but Method 1 shall be the arbitration method in case of any dispute as to acceptance of the bolts.

A3.2.1.2 *Proof Load Testing Long Bolts*—When fasteners are too long to test in the available equipment they may be cut to 8 ± 0.125 in. and tested using Method 1. If there is a dispute over results when testing the same part or lot of parts both full size and cut to 8 in., the 8 in. test results shall be used to determine acceptance.

(a) *Method 1, Length Measurement*—The overall length of a straight bolt shall be measured at its true center line with an instrument capable of measuring changes in length of

0.0001 in. (0.0025 mm) with an accuracy of 0.0001 in. in any 0.001-in. (0.025 mm) range. The preferred method of measuring the length shall be between conical centers machined on the center line of the bolt, with mating centers on the measuring anvils. The head or body of the bolt shall be marked so that it can be placed in the same position for all measurements. The bolt shall be assembled in the testing equipment as outlined in A3.2.1.4, and the proof load specified in the product specification shall be applied. Upon release of this load the length of the bolt shall be again measured and shall show no permanent elongation. A tolerance of ±0.0005 in. (0.0127 mm) shall be allowed between the measurement made before loading and that made after loading. Variables, such as straightness and thread alignment (plus measurement error), may result in apparent elongation of the fasteners when the proof load is initially applied. In such cases, the fastener may be retested using a 3 % greater load, and may be considered satisfactory if the length after this loading is the same as before this loading (within the 0.0005-in. tolerance for measurement error).

A3.2.1.3 *Proof Load-Time of Loading*—The proof load is to be maintained for a period of 10 s before release of load, when using Method 1.

(1) Method 2, Yield Strength—The bolt shall be assembled in the testing equipment as outlined in A3.2.1.4. As the load is applied, the total elongation of the bolt or any part of the bolt which includes the exposed six threads shall be measured and recorded to produce a load-strain or a stress-strain diagram. The load or stress at an offset equal to 0.2 % of the length of bolt occupied by six full threads shall be determined by the method described in 14.2.1 of these methods, A370. This load or stress shall not be less than that prescribed in the product specification.

A3.2.1.4 *Axial Tension Testing of Full Size Bolts*—Bolts are to be tested in a holder with the load axially applied between the head and a nut or suitable fixture (see Fig. A3.1), either of which shall have sufficient thread engagement to develop the full strength of the bolt. The nut or fixture shall be assembled on the bolt leaving six complete bolt threads unengaged between the grips, except for heavy hexagon structural bolts which shall have four complete threads unengaged between the grips. To meet the requirements of this test, there shall be a tensile failure in the body or threaded section with no failure at the junction of the body and head. When tensile testing externally threaded fasteners made of austenitic stainless steel and the test fastener's thread pulls out of the internally threaded test fixture after the minimum tensile strength requirement has been reached, the fasteners shall be considered conforming to the tensile strength requirement and, in addition to the tensile strength, the failure mode shall be reported to the purchaser. If it is necessary to record or report the tensile strength of bolts as psi values, the stress area shall be calculated from the mean of the mean root and pitch diameters of Class 3 external threads as follows:

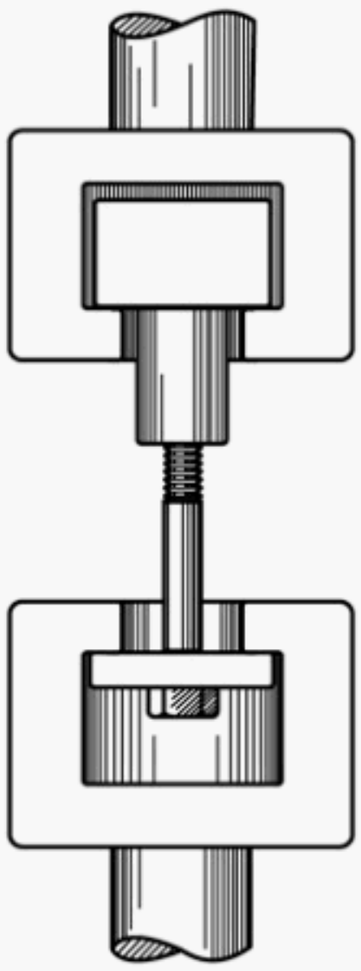

FIG. A3.1 Tension Testing Full-size Bolt

$$A_s = 0.7854\,[D - (0.9743/n)]^2 \qquad (A3.1)$$

where:

A_s = stress area, in.^{2},
D = nominal diameter, in., and
n = number of threads per in.

A3.2.1.5 *Tension Testing of Full-size Bolts with a Wedge*—The purpose of this test is to obtain the tensile strength and demonstrate the "head quality" and ductility of a bolt with a standard head by subjecting it to eccentric loading. The ultimate load on the bolt shall be determined as described in A3.2.1.4, except that a 10° wedge shall be placed under the same bolt previously tested for the proof load (see A3.2.1.1). The bolt head shall be so placed that no corner of the hexagon or square takes a bearing load, that is, a flat of the head shall be aligned with the direction of uniform thickness of the wedge (see Fig. A3.2). The wedge shall have an included angle between its faces as shown in Table A3.1 and shall have a thickness of one-half of the nominal bolt diameter at the short side of the hole. The hole in the wedge shall have the following clearance over the nominal size of the bolt, and its edges, top and bottom, shall be rounded to the following radius:

Nominal Bolt Size, in.	Clearance in Hole, in. (mm)	Radius on Corners of Hole, in. (mm)
¼ to ½	0.030 (0.76)	0.030 (0.76)
9/16 to ¾	0.050 (1.3)	0.060 (1.5)
⅞ to 1	0.063 (1.5)	0.060 (1.5)
1⅛ to 1¼	0.063 (1.5)	0.125 (3.2)
1⅜ to 1½	0.094 (2.4)	0.125 (3.2)

A3.2.1.6 *Wedge Testing of HT Bolts Threaded to Head*—For heat-treated bolts that are threaded 1 diameter and closer to the underside of the head, the wedge angle shall be 6° for sizes ¼ through ¾ in. (6.35 to 19.0 mm) and 4° for sizes over ¾ in.

A3.2.1.7 *Tension Testing of Bolts Machined to Round Test Specimens:*

(1) Bolts under 1½ in. (38 mm) in nominal diameter which require machined tests shall preferably use a standard ½-in., (13 mm) round 2-in. (50 mm) gauge length test specimen (see Fig. 4); however, bolts of small cross-section that will not permit the taking of this standard test specimen shall use one of the small-size-specimens-proportional-to-standard (see Fig. 4) and the specimen shall have a reduced section as large as possible. In all cases, the longitudinal axis of

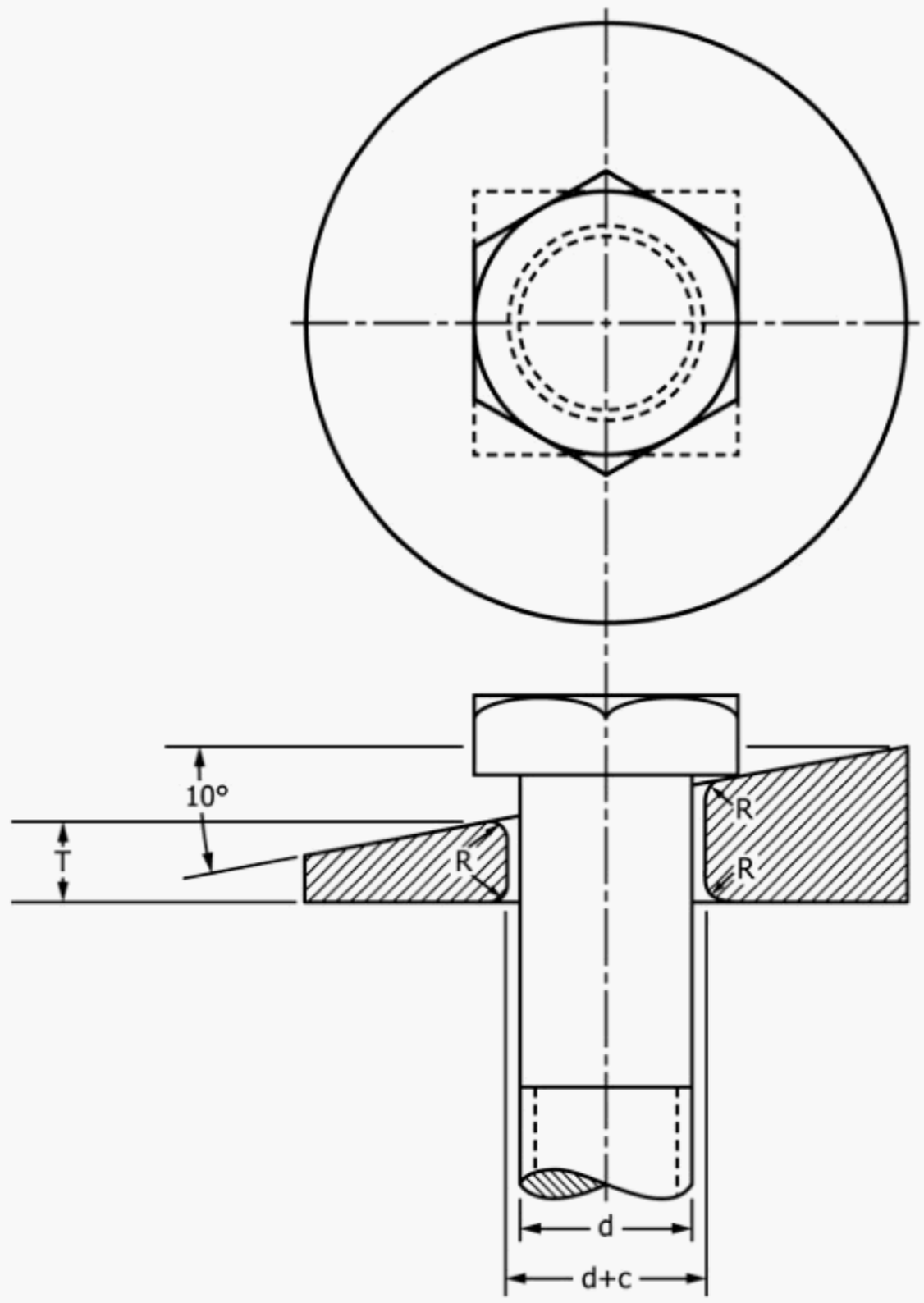

c = Clearance of wedge hole
d = Diameter of bolt
R = Radius
T = Thickness of wedge at short side of hole equal to one-half diameter of bolt

FIG. A3.2 Wedge Test Detail

TABLE A3.1 Tension Test Wedge Angles

Nominal Product Size, in.	Degrees	
	Bolts	Studs and Flange Bolts
¼ – 1	10	6
Over 1	6	4

the specimen shall be concentric with the axis of the bolt; the head and threaded section of the bolt may be left intact, as in Fig. A3.3 and Fig. A3.4, or shaped to fit the holders or grips of the testing machine so that the load is applied axially. The gauge length for measuring the elongation shall be four times the diameter of the specimen.

(2) For bolts 1½ in. and over in nominal diameter, a standard ½-in. round 2-in. gauge length test specimen shall be turned from the bolt, having its axis midway between the center and outside surface of the body of the bolt as shown in Fig. A3.5.

(3) Machined specimens are to be tested in tension to determine the properties prescribed by the product specifications. The methods of testing and determination of properties shall be in accordance with Section 14 of these test methods.

A3.3 Hardness Tests for Externally Threaded Fasteners

A3.3.1 When specified, externally threaded fasteners shall be hardness tested. Fasteners with hexagonal or square heads shall be Brinell or Rockwell hardness tested. For hexagonal and square head bolts, test shall be conducted on the wrench flats, top of head, unthreaded shank, end of bolt or at the arbitration location. For studs, products without parallel

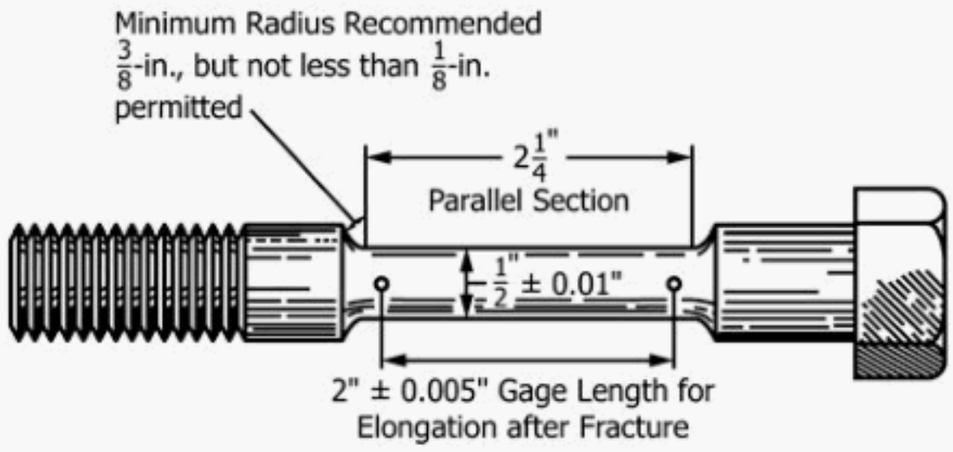

NOTE 1—Metric equivalent: 1 in. = 25.4 mm.

FIG. A3.3 Tension Test Specimen for Bolt with Turned-down Shank

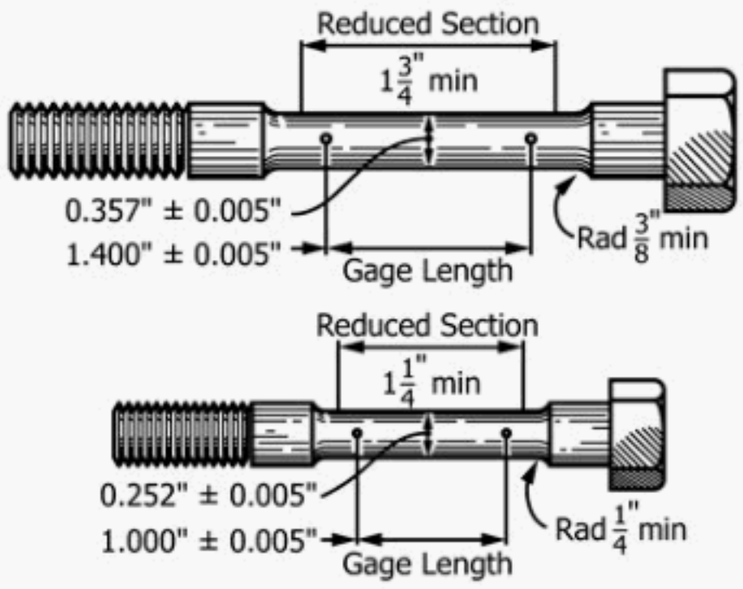

NOTE 1—Metric equivalent: 1 in. = 25.4 mm.

FIG. A3.4 Examples of Small Size Specimens Proportional to Standard 2-in. Gauge Length Specimen

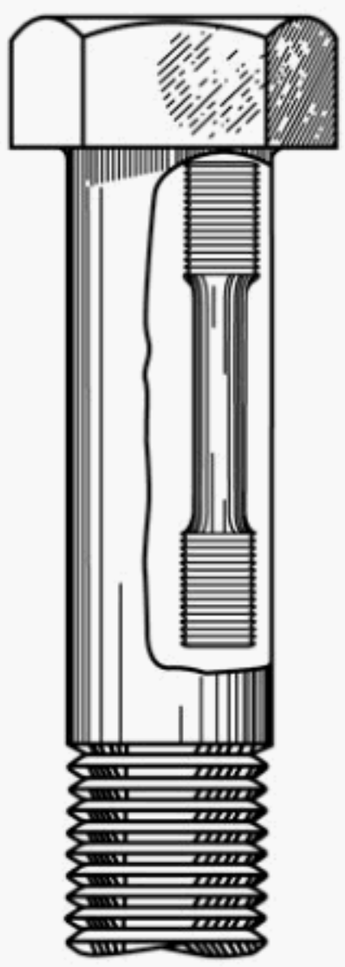

FIG. A3.5 Location of Standard Round 2-in. Gauge Length Tension Test Specimen When Turned from Large Size Bolt

wrench flats and for head styles other than hexagonal and square, tests shall be conducted on the unthreaded shank, end of the bolt or stud or at the arbitration location. Due to possible distortion from the Brinell load, care should be taken that this test meets the requirements of Section 17 of these test methods where the Brinell hardness test is impractical, the Rockwell

hardness test shall be substituted. Rockwell hardness test procedures shall conform to Section 18 of these test methods.

A3.3.2 In cases where a dispute exists between buyer and seller as to whether externally threaded fasteners meet or exceed the hardness limit of the product specification, for purposes of arbitration, hardness may be taken on two transverse sections through a representative sample fastener selected at random. Hardness readings shall be taken at the locations shown in Fig. A3.6. All hardness values must conform with the hardness limit of the product specification in order for the fasteners represented by the sample to be considered in compliance. This provision for arbitration of a dispute shall not be used to accept clearly rejectable fasteners.

A3.4 Testing of Nuts

A3.4.1 *Hardness Test*—Rockwell hardness of nuts shall be determined on the top or bottom face of the nut. Brinell hardness shall be determined on the side of the nuts. Either method may be used at the option of the manufacturer, taking into account the size and grade of the nuts under test. When the standard Brinell hardness test results in deforming the nut it will be necessary to use a minor load or substitute a Rockwell hardness test.

A3.4.2 *Cross Sectional Hardness Test*—Nuts whose proof stress requires a load exceeding 160 000 lb shall, unless otherwise specified in the purchase order, contract or product specification, be considered too large for full size proof load testing and shall be subjected to a cross sectional hardness test. Sample nuts shall be sectioned laterally at approximately one half (½) of the nut height. Such samples need not be threaded, but shall be part of the manufacturing lot, including heat treatment. All tests shall be conducted using Rockwell Hardness test scales. Two sets of three readings shall be taken in locations ~180° apart (see Fig. A3.7). All readings shall be reported when certification is required and shall meet the hardness requirements listed in the product specification. The readings shall be taken across the section of the nut at the following positions:

Position 1—as close as practical to the major diameter (if threaded) or hole side wall (if blank), but no closer than 2½ times the diameter of the indenter.

Position 2—at the core (halfway between the major diameter (if threaded) or hole side wall, if blank) and a corner of the nut.

Position 3—as close as practical to the corner of the nut, but no closer than 2½ times the diameter of the indenter.

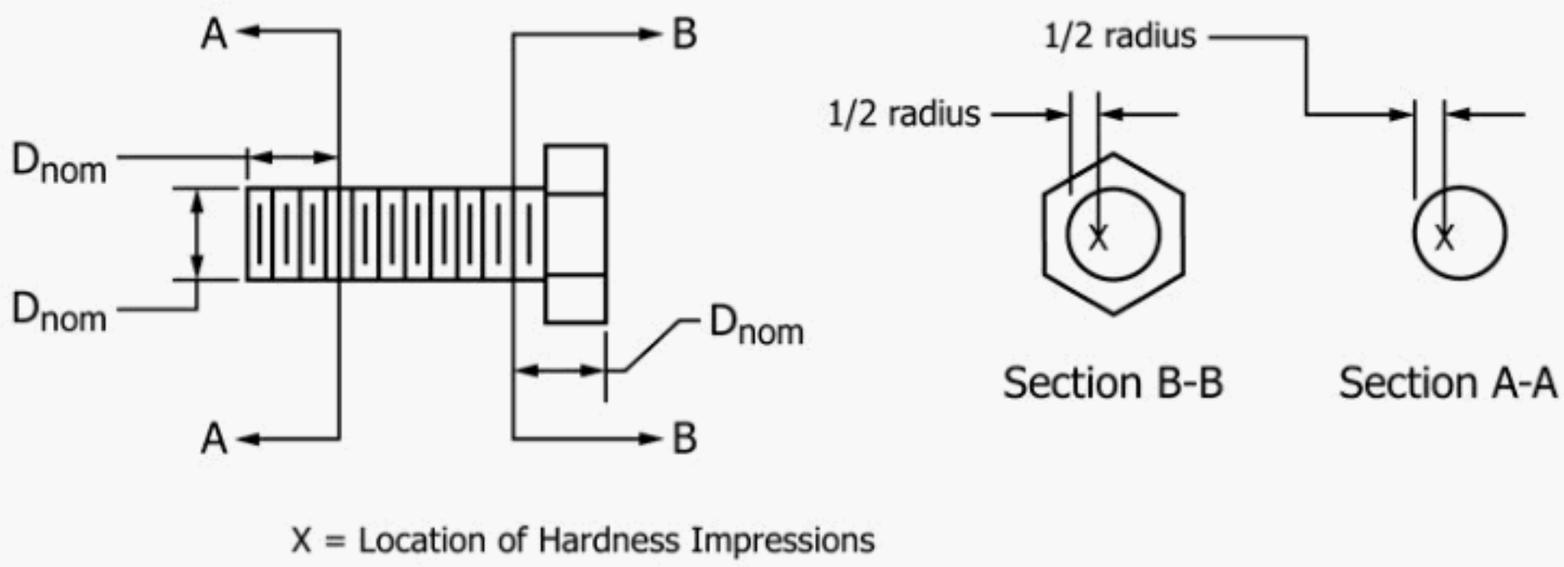

FIG. A3.6 Hardness Test Locations for Bolts in a Dispute

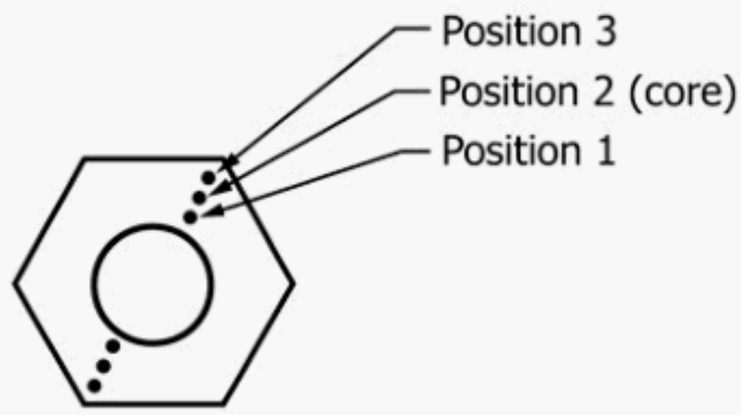

FIG. A3.7 Hardness Test Locations

A4. STEEL ROUND WIRE PRODUCTS

A4.1 Scope

A4.1.1 This annex contains testing requirements for Round Wire Products that are specific to the product. The requirements contained in this annex are supplementary to those found in the general section of this specification. In the case of conflict between requirements provided in this annex and those found in the general section of this specification, the requirements of this annex shall prevail. In the case of conflict between requirements provided in this annex and requirements found in product specifications, the requirements found in the product specification shall prevail.

A4.2 Apparatus

A4.2.1 *Gripping Devices*—Grips of either the wedge or snubbing types as shown in Figs. A4.1 and A4.2 shall be used (see Note A4.1). When using grips of either type, care shall be taken that the axis of the test specimen is located approximately at the center line of the head of the testing machine (see Note A4.2). When using wedge grips the liners used behind the grips shall be of the proper thickness.

NOTE A4.1—Testing machines usually are equipped with wedge grips. These wedge grips, irrespective of the type of testing machine, may be referred to as the "usual type" of wedge grips. The use of fine (180 or 240) grit abrasive cloth in the "usual" wedge type grips, with the abrasive contacting the wire specimen, can be helpful in reducing specimen slipping and breakage at the grip edges at tensile loads up to about 1000 lb. For tests of specimens of wire which are liable to be cut at the edges by the "usual type" of wedge grips, the snubbing type gripping device has proved satisfactory.

For testing round wire, the use of cylindrical seat in the wedge gripping device is optional.

NOTE A4.2—Any defect in a testing machine which may cause nonaxial application of load should be corrected.

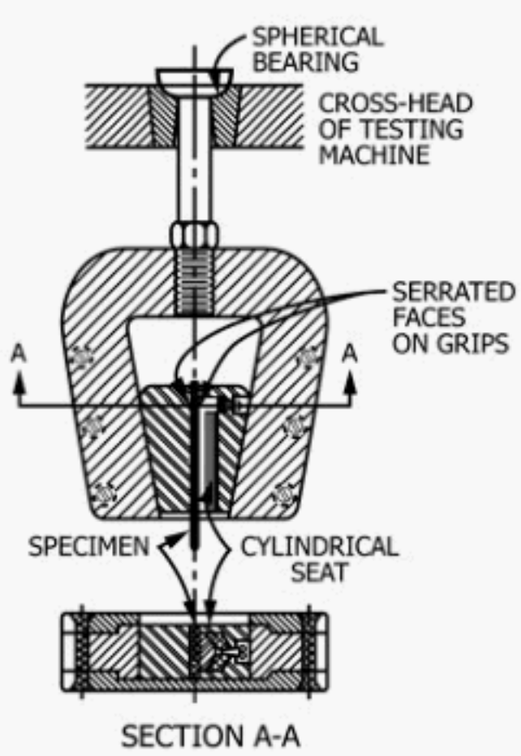

FIG. A4.1 Wedge-type Gripping Device

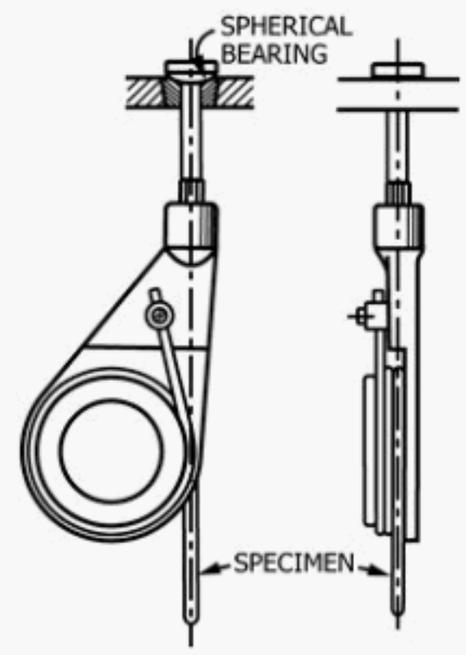

FIG. A4.2 Snubbing-type Gripping Device

A4.2.2 *Pointed Micrometer*—A micrometer with a pointed spindle and anvil suitable for reading the dimensions of the wire specimen at the fractured ends to the nearest 0.001 in. (0.025 mm) after breaking the specimen in the testing machine shall be used.

A4.3 Test Specimens

A4.3.1 Test specimens having the full cross-sectional area of the wire they represent shall be used. The standard gauge length of the specimens shall be 10 in. (254 mm). However, if the determination of elongation values is not required, any convenient gauge length is permissible. The total length of the specimens shall be at least equal to the gauge length (10 in.) plus twice the length of wire required for the full use of the grip employed. For example, depending upon the type of testing machine and grips used, the minimum total length of specimen may vary from 14 to 24 in. (360 to 610 mm) for a 10-in. gauge length specimen.

A4.3.2 Any specimen breaking in the grips shall be discarded and a new specimen tested.

A4.4 Elongation

A4.4.1 In determining permanent elongation, the ends of the fractured specimen shall be carefully fitted together and the distance between the gauge marks measured to the nearest 0.01 in. (0.25 mm) with dividers and scale or other suitable device. The elongation is the increase in length of the gauge length, expressed as a percentage of the original gauge length. In recording elongation values, both the percentage increase and the original gauge length shall be given.

A4.4.2 In determining total elongation (elastic plus plastic extension) autographic or extensometer methods may be employed.

A4.4.3 If fracture takes place outside of the middle third of the gauge length, the elongation value obtained may not be representative of the material.

A4.5 Reduction of Area

A4.5.1 The ends of the fractured specimen shall be carefully fitted together and the dimensions of the smallest cross section measured to the nearest 0.001 in. (0.025 mm) with a pointed micrometer. The difference between the area thus found and the area of the original cross section, expressed as a percentage of the original area, is the reduction of area.

A4.5.2 The reduction of area test is not recommended in wire diameters less than 0.092 in. (2.34 mm) due to the difficulties of measuring the reduced cross sections.

A4.6 Rockwell Hardness Test

A4.6.1 On heat–treated wire of diameter 0.100 in. (2.54 mm) and larger, the specimen shall be flattened on two parallel sides by grinding before testing. The hardness test is not recommended for any diameter of hard drawn wire or heat-treated wire less than 0.100 in. (2.54 mm) in diameter. For round wire, the tensile strength test is greatly preferred over the hardness test.

A4.7 Wrap Test

A4.7.1 This test is used as a means for testing the ductility of certain kinds of wire.

A4.7.2 The test consists of coiling the wire in a closely spaced helix tightly against a mandrel of a specified diameter for a required number of turns. (Unless other specified, the required number of turns shall be five.) The wrapping may be done by hand or a power device. The wrapping rate may not exceed 15 turns per min. The mandrel diameter shall be specified in the relevant wire product specification.

A4.7.3 The wire tested shall be considered to have failed if the wire fractures or if any longitudinal or transverse cracks develop which can be seen by the unaided eye after the first complete turn. Wire which fails in the first turn shall be retested, as such fractures may be caused by bending the wire to a radius less than specified when the test starts.

A4.8 Coiling Test

A4.8.1 This test is used to determine if imperfections are present to the extent that they may cause cracking or splitting during spring coiling and spring extension. A coil of specified length is closed wound on an arbor of a specified diameter. The closed coil is then stretched to a specified permanent increase in length and examined for uniformity of pitch with no splits or fractures. The required arbor diameter, closed coil length, and permanent coil extended length increase may vary with wire diameter, properties, and type.

A5. NOTES ON SIGNIFICANCE OF NOTCHED-BAR IMPACT TESTING

A5.1 Notch Behavior

A5.1.1 The Charpy and Izod type tests bring out notch behavior (brittleness versus ductility) by applying a single overload of stress. The energy values determined are quantitative comparisons on a selected specimen but cannot be converted into energy values that would serve for engineering design calculations. The notch behavior indicated in an individual test applies only to the specimen size, notch geometry, and testing conditions involved and cannot be generalized to other sizes of specimens and conditions.

A5.1.2 The notch behavior of the face-centered cubic metals and alloys, a large group of nonferrous materials and the austenitic steels can be judged from their common tensile properties. If they are brittle in tension they will be brittle when notched, while if they are ductile in tension, they will be ductile when notched, except for unusually sharp or deep notches (much more severe than the standard Charpy or Izod specimens). Even low temperatures do not alter this characteristic of these materials. In contrast, the behavior of the ferritic steels under notch conditions cannot be predicted from their properties as revealed by the tension test. For the study of these materials the Charpy and Izod type tests are accordingly very useful. Some metals that display normal ductility in the tension test may nevertheless break in brittle fashion when tested or when used in the notched condition. Notched conditions include restraints to deformation in directions perpendicular to the major stress, or multiaxial stresses, and stress concentrations. It is in this field that the Charpy and Izod tests prove useful for determining the susceptibility of a steel to notch-brittle behavior though they cannot be directly used to appraise the serviceability of a structure.

A5.1.3 The testing machine itself must be sufficiently rigid or tests on high-strength low-energy materials will result in excessive elastic energy losses either upward through the pendulum shaft or downward through the base of the machine. If the anvil supports, the pendulum striking edge, or the

machine foundation bolts are not securely fastened, tests on ductile materials in the range of 80 ft·lbf (108 J) may actually indicate values in excess of 90 to 100 ft·lbf (122 to 136 J).

A5.2 Notch Effect

A5.2.1 The notch results in a combination of multiaxial stresses associated with restraints to deformation in directions perpendicular to the major stress, and a stress concentration at the base of the notch. A severely notched condition is generally not desirable, and it becomes of real concern in those cases in which it initiates a sudden and complete failure of the brittle type. Some metals can be deformed in a ductile manner even down to the low temperatures of liquid air, while others may crack. This difference in behavior can be best understood by considering the cohesive strength of a material (or the property that holds it together) and its relation to the yield point. In cases of brittle fracture, the cohesive strength is exceeded before significant plastic deformation occurs and the fracture appears crystalline. In cases of the ductile or shear type of failure, considerable deformation precedes the final fracture and the broken surface appears fibrous instead of crystalline. In intermediate cases the fracture comes after a moderate amount of deformation and is part crystalline and part fibrous in appearance.

A5.2.2 When a notched bar is loaded, there is a normal stress across the base of the notch which tends to initiate fracture. The property that keeps it from cleaving, or holds it together, is the "cohesive strength." The bar fractures when the normal stress exceeds the cohesive strength. When this occurs without the bar deforming it is the condition for brittle fracture.

A5.2.3 In testing, though not in service because of side effects, it happens more commonly that plastic deformation precedes fracture. In addition to the normal stress, the applied load also sets up shear stresses which are about 45° to the normal stress. The elastic behavior terminates as soon as the shear stress exceeds the shear strength of the material and deformation or plastic yielding sets in. This is the condition for ductile failure.

A5.2.4 This behavior, whether brittle or ductile, depends on whether the normal stress exceeds the cohesive strength before the shear stress exceeds the shear strength. Several important facts of notch behavior follow from this. If the notch is made sharper or more drastic, the normal stress at the root of the notch will be increased in relation to the shear stress and the bar will be more prone to brittle fracture (see Table A5.1). Also, as the speed of deformation increases, the shear strength increases and the likelihood of brittle fracture increases. On the other hand, by raising the temperature, leaving the notch and the speed of deformation the same, the shear strength is lowered and ductile behavior is promoted, leading to shear failure.

A5.2.5 Variations in notch dimensions will seriously affect the results of the tests. Tests on E4340 steel specimens[7] have shown the effect of dimensional variations on Charpy results (see Table A5.1).

A5.3 Size Effect

A5.3.1 Increasing either the width or the depth of the specimen tends to increase the volume of metal subject to distortion, and by this factor tends to increase the energy absorption when breaking the specimen. However, any increase in size, particularly in width, also tends to increase the degree of restraint and by tending to induce brittle fracture, may decrease the amount of energy absorbed. Where a standard-size specimen is on the verge of brittle fracture, this is particularly true, and a double-width specimen may actually require less energy for rupture than one of standard width.

A5.3.2 In studies of such effects where the size of the material precludes the use of the standard specimen, as for example when the material is ¼-in. plate, subsize specimens are necessarily used. Such specimens (see Fig. 6 of Test Methods E23) are based on the Type A specimen of Fig. 4 of Test Methods E23.

A5.3.3 General correlation between the energy values obtained with specimens of different size or shape is not feasible, but limited correlations may be established for specification purposes on the basis of special studies of particular materials and particular specimens. On the other hand, in a study of the relative effect of process variations, evaluation by use of some arbitrarily selected specimen with some chosen notch will in most instances place the methods in their proper order.

A5.4 Effects of Testing Conditions

A5.4.1 The testing conditions also affect the notch behavior. So pronounced is the effect of temperature on the behavior of steel when notched that comparisons are frequently made by

[7] Fahey, N. H., "Effects of Variables in Charpy Impact Testing," *Materials Research & Standards*, Vol 1, No. 11, November, 1961, p. 872.

TABLE A5.1 Effect of Varying Notch Dimensions on Standard Specimens

	High-energy Specimens, ft·lbf (J)	Medium-energy Specimens, ft·lbf (J)	Low-energy Specimens, ft·lbf (J)
Specimen with standard dimensions	76.0 ± 3.8 (103.0 ± 5.2)	44.5 ± 2.2 (60.3 ± 3.0)	12.5 ± 1.0 (16.9 ± 1.4)
Depth of notch, 0.084 in. (2.13 mm)[A]	72.2 (97.9)	41.3 (56.0)	11.4 (15.5)
Depth of notch, 0.0805 in. (2.04 mm)[A]	75.1 (101.8)	42.2 (57.2)	12.4 (16.8)
Depth of notch, 0.0775 in. (1.77 mm)[A]	76.8 (104.1)	45.3 (61.4)	12.7 (17.2)
Depth of notch, 0.074 in. (1.57 mm)[A]	79.6 (107.9)	46.0 (62.4)	12.8 (17.3)
Radius at base of notch, 0.005 in. (0.127 mm)[B]	72.3 (98.0)	41.7 (56.5)	10.8 (14.6)
Radius at base of notch, 0.015 in. (0.381 mm)[B]	80.0 (108.5)	47.4 (64.3)	15.8 (21.4)

[A] Standard 0.079 ± 0.002 in. (2.00 ± 0.05 mm).
[B] Standard 0.010 ± 0.001 in. (0.25 ± 0.025 mm).

examining specimen fractures and by plotting energy value and fracture appearance versus temperature from tests of notched bars at a series of temperatures. When the test temperature has been carried low enough to start cleavage fracture, there may be an extremely sharp drop in impact value or there may be a relatively gradual falling off toward the lower temperatures. This drop in energy value starts when a specimen begins to exhibit some crystalline appearance in the fracture. The transition temperature at which this embrittling effect takes place varies considerably with the size of the part or test specimen and with the notch geometry.

A5.4.2 A problem peculiar to Charpy-type tests occurs when high-strength, low-energy specimens are tested at low temperatures. These specimens may not leave the machine in the direction of the pendulum swing but rather in a sidewise direction. To ensure that the broken halves of the specimens do not rebound off some component of the machine and contact the pendulum before it completes its swing, modifications may be necessary in older model machines. These modifications differ with machine design. Nevertheless the basic problem is the same in that provisions must be made to prevent rebounding of the fractured specimens into any part of the swinging pendulum. Where design permits, the broken specimens may be deflected out of the sides of the machine and yet in other designs it may be necessary to contain the broken specimens within a certain area until the pendulum passes through the anvils. Some low-energy high-strength steel specimens leave impact machines at speeds in excess of 50 ft (15.3 m)/s although they were struck by a pendulum traveling at speeds approximately 17 ft (5.2 m)/s. If the force exerted on the pendulum by the broken specimens is sufficient, the pendulum will slow down and erroneously high energy values will be recorded. This problem accounts for many of the inconsistencies in Charpy results reported by various investigators within the 10 to 25-ft·lbf (14 to 34 J) range. The Apparatus section (subsection regarding specimen clearance) of Test Methods E23 discusses the two basic machine designs and a modification found to be satisfactory in minimizing jamming.

A5.5 Velocity of Straining

A5.5.1 Velocity of straining is likewise a variable that affects the notch behavior of steel. The impact test shows somewhat higher energy absorption values than the static tests above the transition temperature and yet, in some instances, the reverse is true below the transition temperature.

A5.6 Correlation With Service

A5.6.1 While Charpy or Izod tests may not directly predict the ductile or brittle behavior of steel as commonly used in large masses or as components of large structures, these tests can be used as acceptance tests of identity for different lots of the same steel or in choosing between different steels, when correlation with reliable service behavior has been established. It may be necessary to make the tests at properly chosen temperatures other than room temperature. In this, the service temperature or the transition temperature of full-scale specimens does not give the desired transition temperatures for Charpy or Izod tests since the size and notch geometry may be so different. Chemical analysis, tension, and hardness tests may not indicate the influence of some of the important processing factors that affect susceptibility to brittle fracture nor do they comprehend the effect of low temperatures in inducing brittle behavior.

A6. PROCEDURE FOR CONVERTING PERCENTAGE ELONGATION OF STANDARD ROUND TENSION TEST SPECIMEN TO EQUIVALENT PERCENTAGE ELONGATION OF STANDARD FLAT SPECIMEN

A6.1 Scope

A6.1.1 This method specifies a procedure for converting percentage elongation after fracture obtained in a standard 0.500-in. (12.7 mm) diameter by 2-in. (51 mm) gauge length test specimen to standard flat test specimens ½ by 2 in. and 1½ by 8 in. (38.1 by 203 mm).

A6.2 Basic Equation

A6.2.1 The conversion data in this method are based on an equation by Bertella,[8] and used by Oliver[9] and others. The relationship between elongations in the standard 0.500-in. diameter by 2.0-in. test specimen and other standard specimens can be calculated as follows:

$$e = e_o \left[4.47 \left(\sqrt{A}\right)/L\right]^a \qquad \text{(A6.1)}$$

where:

e_o = percentage elongation after fracture on a standard test specimen having a 2-in. gauge length and 0.500-in. diameter,

e = percentage elongation after fracture on a standard test specimen having a gauge length L and a cross-sectional area A, and

a = constant characteristic of the test material.

A6.3 Application

A6.3.1 In applying the above equation the constant a is characteristic of the test material. The value $a = 0.4$ has been found to give satisfactory conversions for carbon, carbon-manganese, molybdenum, and chromium-molybdenum steels within the tensile strength range of 40 000 to 85 000 psi (275 to 585 MPa) and in the hot-rolled, in the hot-rolled and

[8] Bertella, C. A., *Giornale del Genio Civile*, Vol 60, 1922, p. 343.

[9] Oliver, D. A., *Proceedings of the Institution of Mechanical Engineers*, 1928, p. 827.

normalized, or in the annealed condition, with or without tempering. Note that the cold reduced and quenched and tempered states are excluded. For annealed austenitic stainless steels, the value $a = 0.127$ has been found to give satisfactory conversions.

A6.3.2 Table A6.1 has been calculated taking $a = 0.4$, with the standard 0.500-in. (12.7 mm) diameter by 2-in. (51 mm) gauge length test specimen as the reference specimen. In the case of the subsize specimens 0.350 in. (8.89 mm) in diameter by 1.4-in. (35.6 mm) gauge length, and 0.250-in. (6.35 mm) diameter by 1.0-in. (25.4 mm) gauge length the factor in the equation is 4.51 instead of 4.47. The small error introduced by using Table A6.1 for the subsized specimens may be neglected.

Table A6.2 for annealed austenitic steels has been calculated taking $a = 0.127$, with the standard 0.500-in. diameter by 2-in. gauge length test specimen as the reference specimen.

A6.3.3 Elongation given for a standard 0.500-in. diameter by 2-in. gauge length specimen may be converted to elongation for ½ by 2 in. or 1½ by 8 in. (38.1 by 203 mm) flat specimens by multiplying by the indicated factor in Table A6.1 and Table A6.2.

A6.3.4 These elongation conversions shall not be used where the width to thickness ratio of the test piece exceeds 20, as in sheet specimens under 0.025 in. (0.635 mm) in thickness.

A6.3.5 While the conversions are considered to be reliable within the stated limitations and may generally be used in

TABLE A6.1 Carbon and Alloy Steels—Material Constant $a = 0.4$. Multiplication Factors for Converting Percent Elongation From ½-in. Diameter by 2-in. Gauge Length Standard Tension Test Specimen to Standard ½ by 2-in. and 1½ by 8-in. Flat Specimens

Thickness, in.	½ by 2-in. Specimen	1½ by 8-in. Specimen	Thickness in.	1½ by 8-in. Specimen
0.025	0.574	. . .	0.800	0.822
0.030	0.596	. . .	0.850	0.832
0.035	0.614	. . .	0.900	0.841
0.040	0.631	. . .	0.950	0.850
0.045	0.646	. . .	1.000	0.859
0.050	0.660	. . .	1.125	0.880
0.055	0.672	. . .	1.250	0.898
0.060	0.684	. . .	1.375	0.916
0.065	0.695	. . .	1.500	0.932
0.070	0.706	. . .	1.625	0.947
0.075	0.715	. . .	1.750	0.961
0.080	0.725	. . .	1.875	0.974
0.085	0.733	. . .	2.000	0.987
0.090	0.742	0.531	2.125	0.999
0.100	0.758	0.542	2.250	1.010
0.110	0.772	0.553	2.375	1.021
0.120	0.786	0.562	2.500	1.032
0.130	0.799	0.571	2.625	1.042
0.140	0.810	0.580	2.750	1.052
0.150	0.821	0.588	2.875	1.061
0.160	0.832	0.596	3.000	1.070
0.170	0.843	0.603	3.125	1.079
0.180	0.852	0.610	3.250	1.088
0.190	0.862	0.616	3.375	1.096
0.200	0.870	0.623	3.500	1.104
0.225	0.891	0.638	3.625	1.112
0.250	0.910	0.651	3.750	1.119
0.275	0.928	0.664	3.875	1.127
0.300	0.944	0.675	4.000	1.134
0.325	0.959	0.686	. . .	. . .
0.350	0.973	0.696	. . .	. . .
0.375	0.987	0.706	. . .	. . .
0.400	1.000	0.715	. . .	. . .
0.425	1.012	0.724	. . .	. . .
0.450	1.024	0.732	. . .	. . .
0.475	1.035	0.740	. . .	. . .
0.500	1.045	0.748	. . .	. . .
0.525	1.056	0.755	. . .	. . .
0.550	1.066	0.762	. . .	. . .
0.575	1.075	0.770	. . .	. . .
0.600	1.084	0.776	. . .	. . .
0.625	1.093	0.782	. . .	. . .
0.650	1.101	0.788	. . .	. . .
0.675	1.110	. . .	. . .	. . .
0.700	1.118	0.800	. . .	. . .
0.725	1.126	. . .	. . .	. . .
0.750	1.134	0.811	. . .	. . .

TABLE A6.2 Annealed Austenitic Stainless Steels—Material Constant $a = 0.127$. Multiplication Factors for Converting Percent Elongation From ½-in. Diameter by 2-in. Gauge Length Standard Tension Test Specimen to Standard ½ by 2-in. and 1½ by 8-in. Flat Specimens

Thickness, in.	½ by 2-in. Specimen	1½ by 8-in. Specimen	Thickness, in.	1½ by 8-in. Specimen
0.025	0.839	. . .	0.800	0.940
0.030	0.848	. . .	0.850	0.943
0.035	0.857	. . .	0.900	0.947
0.040	0.864	. . .	0.950	0.950
0.045	0.870	. . .	1.000	0.953
0.050	0.876	. . .	1.125	0.960
0.055	0.882	. . .	1.250	0.966
0.060	0.886	. . .	1.375	0.972
0.065	0.891	. . .	1.500	0.978
0.070	0.895	. . .	1.625	0.983
0.075	0.899	. . .	1.750	0.987
0.080	0.903	. . .	1.875	0.992
0.085	0.906	. . .	2.000	0.996
0.090	0.909	0.818	2.125	1.000
0.095	0.913	0.821	2.250	1.003
0.100	0.916	0.823	2.375	1.007
0.110	0.921	0.828	2.500	1.010
0.120	0.926	0.833	2.625	1.013
0.130	0.931	0.837	2.750	1.016
0.140	0.935	0.841	2.875	1.019
0.150	0.940	0.845	3.000	1.022
0.160	0.943	0.848	3.125	1.024
0.170	0.947	0.852	3.250	1.027
0.180	0.950	0.855	3.375	1.029
0.190	0.954	0.858	3.500	1.032
0.200	0.957	0.860	3.625	1.034
0.225	0.964	0.867	3.750	1.036
0.250	0.970	0.873	3.875	1.038
0.275	0.976	0.878	4.000	1.041
0.300	0.982	0.883	. . .	. . .
0.325	0.987	0.887	. . .	. . .
0.350	0.991	0.892	. . .	. . .
0.375	0.996	0.895	. . .	. . .
0.400	1.000	0.899	. . .	. . .
0.425	1.004	0.903	. . .	. . .
0.450	1.007	0.906	. . .	. . .
0.475	1.011	0.909	. . .	. . .
0.500	1.014	0.912	. . .	. . .
0.525	1.017	0.915	. . .	. . .
0.550	1.020	0.917	. . .	. . .
0.575	1.023	0.920	. . .	. . .
0.600	1.026	0.922	. . .	. . .
0.625	1.029	0.925	. . .	. . .
0.650	1.031	0.927	. . .	. . .
0.675	1.034	. . .	. . .	. . .
0.700	1.036	0.932	. . .	. . .
0.725	1.038	. . .	. . .	. . .
0.750	1.041	0.936	. . .	. . .

specification writing where it is desirable to show equivalent elongation requirements for the several standard ASTM tension specimens covered in Test Methods A370, consideration must be given to the metallurgical effects dependent on the thickness of the material as processed.

A7. TESTING MULTI-WIRE STRAND

This annex has been replaced by Test Methods A1061/A1061M, and procedures for the tension testing of multi-wire strand for prestressed concrete have been integrated into the relevant product specifications.

A8. ROUNDING OF TEST DATA

A8.1 Application

A8.1.1 This annex shall apply to rounding test data for the purpose of determining conformance to product specification requirements.

A8.1.2 This annex shall apply only when rounding is not specified in the product specification.

A8.1.3 Observed or calculated test results and records maintained by testing laboratories are not subject to this annex.

A8.2 Method

A8.2.1 Values shall be rounded in accordance with the rules of Practice E29 unless otherwise stated herein.

A8.2.2 In the special case of rounding the number "5" when no additional numbers other than "0" follow the "5," rounding shall be in accordance with Practice E29 except where this would result in rejection of the product.

A8.2.3 Requirements for rounding levels for determining product acceptance or rejection are given in Table A8.1. Specific reported test data values shall be rounded to Table A8.1 for determining product acceptance or rejection.

A8.2.4 Table A8.1 values are designed to provide uniformity in determining conformance to product specification requirements and should be considered when rounding requirements are stated in product specifications.

A8.2.5 When rounding requirements are neither stated in the product specification nor listed in Table A8.1, an observed or calculated value shall be rounded to the nearest unit in the last right hand digit used in expressing the specification requirement.

TABLE A8.1 Rounded Test Data for Determining Conformance to Specification

Test Quality	Test Data Range	Rounded Value[A]
Yield Point, Yield Strength, Tensile Strength	<50 000 psi (<50 ksi)	100 psi (0.1 ksi)
	50 000 to <100 000 psi (50 to 100 ksi)	500 psi (0.5 ksi)
	≥100 000 psi (≥100 ksi)	1000 psi (1 ksi)
	(<350 MPa)	(1 MPa)
	(350 to 700 MPa)	(5 MPa)
	(>700 MPa)	(10 MPa)
Elongation	0 to <10 %	0.5 %
	≥10 %	1 %
Reduction of Area	0 to <10 %	0.5 %
	≥10 %	1 %
Absorbed Energy	0 to ≤240 ft · lbf [0 to ≤325 J]	1 ft · lbf [1 J][B]
Brinell Hardness	all values	tabular value[C]
Rockwell Hardness	all scales	1 Rockwell Number

[A] Round test data to the nearest integral multiple of the values in this column. If the data value is exactly midway between two rounded values, round in accordance with A8.2.2.
[B] These units are not equivalent but the rounding occurs in the same numerical ranges for each. (1 ft·lbf = 1.356 J).
[C] Round the mean diameter of the Brinell impression to the nearest 0.05 mm and report the corresponding Brinell hardness number read from the table without further rounding.

A9. METHODS FOR TESTING STEEL REINFORCING BARS

The testing requirements for steel reinforcing bars contained in this annex have been integrated into the relevant product specifications.

A10. PROCEDURE FOR USE AND CONTROL OF HEAT-CYCLE SIMULATION

A10.1 Purpose

A10.1.1 To ensure consistent and reproducible heat treatments of production forgings and the test specimens that represent them when the practice of heat-cycle simulation is used.

A10.2 Scope

A10.2.1 Generation and documentation of actual production time—temperature curves (MASTER CHARTS).

A10.2.2 Controls for duplicating the master cycle during heat treatment of production forgings. (Heat treating within the essential variables established during A1.2.1.)

A10.2.3 Preparation of program charts for the simulator unit.

A10.2.4 Monitoring and inspection of the simulated cycle within the limits established by the ASME Code.

A10.2.5 Documentation and storage of all controls, inspections, charts, and curves.

A10.3 Referenced Documents

A10.3.1 *ASME Standards:*[4]

A10.3.1.1 ASME Boiler and Pressure Vessel Code Section III, latest edition.

A10.3.1.2 ASME Boiler and Pressure Vessel Code Section VIII, Division 2, latest edition.

A10.4 Procedure

A10.4.1 *Production Master Charts:*

A10.4.1.1 Thermocouples shall be imbedded in each forging from which a master chart is obtained. Temperature shall be monitored by a recorder with resolution sufficient to clearly define all aspects of the heating, holding, and cooling process. All charts are to be clearly identified with all pertinent information and identification required for maintaining permanent records.

A10.4.1.2 Thermocouples shall be imbedded 180° apart if the material specification requires test locations 180° apart.

A10.4.1.3 One master chart (or two if required in accordance with A10.4.3.1) shall be produced to represent essentially identical forgings (same size and shape). Any change in size or geometry (exceeding rough machining tolerances) of a forging will necessitate that a new master cooling curve be developed.

A10.4.1.4 If more than one curve is required per master forging (180° apart) and a difference in cooling rate is achieved, then the most conservative curve shall be used as the master curve.

A10.4.2 *Reproducibility of Heat Treatment Parameters on Production Forgings:*

A10.4.2.1 All information pertaining to the quench and temper of the master forging shall be recorded on an appropriate permanent record, similar to the one shown in Table A10.1.

A10.4.2.2 All information pertaining to the quench and temper of the production forgings shall be appropriately recorded, preferably on a form similar to that used in A10.4.2.1. Quench records of production forgings shall be retained for future reference. The quench and temper record of the master forging shall be retained as a permanent record.

A10.4.2.3 A copy of the master forging record shall be stored with the heat treatment record of the production forging.

A10.4.2.4 The essential variables, as set forth on the heat treat record, shall be controlled within the given parameters on the production forging.

A10.4.2.5 The temperature of the quenching medium prior to quenching each production forging shall be equal to or lower than the temperature of the quenching medium prior to quenching the master forging.

A10.4.2.6 The time elapsed from opening the furnace door to quench for the production forging shall not exceed that elapsed for the master forging.

A10.4.2.7 If the time parameter is exceeded in opening the furnace door to beginning of quench, the forging shall be placed back into the furnace and brought back up to equalization temperature.

A10.4.2.8 All forgings represented by the same master forging shall be quenched with like orientation to the surface of the quench bath.

A10.4.2.9 All production forgings shall be quenched in the same quench tank, with the same agitation as the master forging.

A10.4.2.10 *Uniformity of Heat Treat Parameters—(1)* The difference in actual heat treating temperature between production forgings and the master forging used to establish the simulator cycle for them shall not exceed ±25 °F (±14 °C) for the quench cycle. *(2)* The tempering temperature of the production forgings shall not fall below the actual tempering temperature of the master forging. *(3)* At least one contact surface thermocouple shall be placed on each forging in a production load. Temperature shall be recorded for all surface thermocouples on a Time Temperature Recorder and such records shall be retained as permanent documentation.

A10.4.3 *Heat-cycle Simulation:*

A10.4.3.1 Program charts shall be made from the data recorded on the master chart. All test specimens shall be given the same heating rate above, the AC1, the same holding time and the same cooling rate as the production forgings.

A10.4.3.2 The heating cycle above the AC1, a portion of the holding cycle, and the cooling portion of the master chart shall be duplicated and the allowable limits on temperature and time, as specified in *(a)* through *(c)*, shall be established for verification of the adequacy of the simulated heat treatment.

(a) Heat Cycle Simulation of Test Coupon Heat Treatment for Quenched and Tempered Forgings and Bars—If cooling rate data for the forgings and bars and cooling rate control devices for the test specimens are available, the test specimens may be heat-treated in the device.

(b) The test coupons shall be heated to substantially the same maximum temperature as the forgings or bars. The test coupons shall be cooled at a rate similar to and no faster than the cooling rate representative of the test locations and shall be within 25 °F (14 °C) and 20 s at all temperatures after cooling begins. The test coupons shall be subsequently heat treated in accordance with the thermal treatments below the critical temperature including tempering and simulated post weld heat treatment.

(c) Simulated Post Weld Heat Treatment of Test Specimens (for ferritic steel forgings and bars)—Except for carbon steel (P Number 1, Section IX of the Code) forgings and bars with a nominal thickness or diameter of 2 in. (51 mm) or less, the test specimens shall be given a heat treatment to simulate any thermal treatments below the critical temperature that the

TABLE A10.1 Heat-treat Record-essential Variables

	[redacted]	[redacted]	Production Forging 2	Production Forging 3	[redacted]
Program chart number					
Time at temperature and actual temperature of heat trea					
Method of cooling					
Forging thickness					
Thermocouple immersion					
Beneath buffer (yes/no)					
Forging number					
Product					
Material					
Thermocouple location—0 deg					
Thermocouple location—180 deg					
Quench tank No.					
Date of heat treatment					
Furnace number					
Cycle number					
Heat treater					
Starting quench medium temperature					
Time from furnace to quench					
Heating rate above 1000 °F (538 °C)					
Temperature upon removal from quench after 5 min					
Orientation of forging in quench					

forgings and bars may receive during fabrication. The simulated heat treatment shall utilize temperatures, times, and cooling rates as specified on the order. The total time at temperature(s) for the test material shall be at least 80 % of the total time at temperature(s) to which the forgings and bars are subjected during postweld heat treatment. The total time at temperature(s) for the test specimens may be performed in a single cycle.

A10.4.3.3 Prior to heat treatment in the simulator unit, test specimens shall be machined to standard sizes that have been determined to allow adequately for subsequent removal of decarb and oxidation.

A10.4.3.4 At least one thermocouple per specimen shall be used for continuous recording of temperature on an independent external temperature-monitoring source. Due to the sensitivity and design peculiarities of the heating chamber of certain equipment, it is mandatory that the hot junctions of control and monitoring thermocouples always be placed in the same relative position with respect to the heating source (generally infrared lamps).

A10.4.3.5 Each individual specimen shall be identified, and such identification shall be clearly shown on the simulator chart and simulator cycle record.

A10.4.3.6 The simulator chart shall be compared to the master chart for accurate reproduction of simulated quench in accordance with A10.4.3.2*(a)*. If any one specimen is not heat treated within the acceptable limits of temperature and time, such specimen shall be discarded and replaced by a newly machined specimen. Documentation of such action and reasons for deviation from the master chart shall be shown on the simulator chart, and on the corresponding nonconformance report.

A10.4.4 *Reheat Treatment and Retesting:*

A10.4.4.1 In the event of a test failure, retesting shall be handled in accordance with rules set forth by the material specification.

A10.4.4.2 If retesting is permissible, a new test specimen shall be heat treated the same as previously. The production forging that it represents will have received the same heat treatment. If the test passes, the forging shall be acceptable. If it fails, the forging shall be rejected or shall be subject to reheat treatment if permissible.

A10.4.4.3 If reheat treatment is permissible, proceed as follows: *(1)* Reheat treatment same as original heat treatment (time, temperature, cooling rate). Using new test specimens from an area as close as possible to the original specimens, repeat the austenitize and quench cycles twice, followed by the tempering cycle (double quench and temper). The production forging shall be given the identical double quench and temper as its test specimens above. *(2)* Reheat treatment using a new heat treatment practice. Any change in time, temperature, or cooling rate shall constitute a new heat treatment practice. A new master curve shall be produced and the simulation and testing shall proceed as originally set forth.

A10.4.4.4 In summation, each test specimen and its corresponding forging shall receive identical heat treatment or heat treatment; otherwise the testing shall be invalid.

A10.4.5 *Storage, Recall, and Documentation of Heat-cycle Simulation Data*—All records pertaining to heat-cycle simulation shall be maintained and held for a period of ten years or as designed by the customer. Information shall be so organized that all practices can be verified by adequate documented records.

REFERENCES

(1) Griffin, J. A., "Analysis of Data From NIST Technical Note 1858," *ASTM A01.13 Task Group Meeting*, San Antonio, TX, 5.4.16, https://www.sfsa.org.

(2) Wallin, K., Powerpoint presentation "Sub-sized Cvn Specimen Conversion Methodology" *ASTM A01.13 Task Group Meeting*, Tampa, FL, 11.18.15, https://www.sfsa.org.

(3) Griffin, J. A., "A Literature Review to Assess the Reliability of the Conversion Factors for Sub-size Specimens Shown in ASTM A370 Table 9," https://www.sfsa.org.

(4) Lucon, E., McCowan, C. N., and Santoyo, R. L. "Impact Characterization of 4340 and T200 Steels by Means of Standard, Sub-size and Miniaturized Charpy Specimens," *NIST Technical Note 1858*, http://nvlpubs.nist.gov.

(5) Lucon, E., McCowan, C. N., Santoyo, R. L. "Impact Characterization of Line Pipe Steels by Means of Standard, Sub-size and Miniaturized Charpy Specimens," *NIST Technical Note 1865*, http://nvlpubs.nist.gov.

SUMMARY OF CHANGES

Committee A01 has identified the location of selected changes to this standard since the last issue (A370 – 19$^{\varepsilon 1}$) that may impact the use of this standard. (Approved Aug. 1, 2020.)

(1) Consolidated 5.1, 5.2, 7, 27.2.1, A5.4.2, and A10.4 into Section 3 (Terminology). No text revisions to the existing terms and definitions were made. All supplementary information was moved into its related Discussion without revision.

Committee A01 has identified the location of selected changes to this standard since the last issue (A370 – 18) that may impact the use of this standard. (Approved July 1, 2019.)

(1) Revised Annex A8 for clarity and to make Table A8.1 rounding instructions mandatory.

ASTM International takes no position respecting the validity of any patent rights asserted in connection with any item mentioned in this standard. Users of this standard are expressly advised that determination of the validity of any such patent rights, and the risk of infringement of such rights, are entirely their own responsibility.

This standard is subject to revision at any time by the responsible technical committee and must be reviewed every five years and if not revised, either reapproved or withdrawn. Your comments are invited either for revision of this standard or for additional standards and should be addressed to ASTM International Headquarters. Your comments will receive careful consideration at a meeting of the responsible technical committee, which you may attend. If you feel that your comments have not received a fair hearing you should make your views known to the ASTM Committee on Standards, at the address shown below.

This standard is copyrighted by ASTM International, 100 Barr Harbor Drive, PO Box C700, West Conshohocken, PA 19428-2959, United States. Individual reprints (single or multiple copies) of this standard may be obtained by contacting ASTM at the above address or at 610-832-9585 (phone), 610-832-9555 (fax), or service@astm.org (e-mail); or through the ASTM website (www.astm.org). Permission rights to photocopy the standard may also be secured from the Copyright Clearance Center, 222 Rosewood Drive, Danvers, MA 01923, Tel: (978) 646-2600; http://www.copyright.com/