This international standard was developed in accordance with internationally recognized principles on standardization established in the Decision on Principles for the Development of International Standards, Guides and Recommendations issued by the World Trade Organization Technical Barriers to Trade (TBT) Committee.

Designation: B117 – 19

Standard Practice for Operating Salt Spray (Fog) Apparatus[1]

This standard is issued under the fixed designation B117; the number immediately following the designation indicates the year of original adoption or, in the case of revision, the year of last revision. A number in parentheses indicates the year of last reapproval. A superscript epsilon (ε) indicates an editorial change since the last revision or reapproval.

This standard has been approved for use by agencies of the U.S. Department of Defense.

1. Scope

1.1 This practice covers the apparatus, procedure, and conditions required to create and maintain the salt spray (fog) test environment. Suitable apparatus which may be used is described in Appendix X1.

1.2 This practice does not prescribe the type of test specimen or exposure periods to be used for a specific product, nor the interpretation to be given to the results.

1.3 The values stated in SI units are to be regarded as standard. The values given in parentheses after SI units are provided for information only and are not considered standard.

1.4 *This standard does not purport to address all of the safety concerns, if any, associated with its use. It is the responsibility of the user of this standard to establish appropriate safety, health, and environmental practices and determine the applicability of regulatory limitations prior to use.*

1.5 *This international standard was developed in accordance with internationally recognized principles on standardization established in the Decision on Principles for the Development of International Standards, Guides and Recommendations issued by the World Trade Organization Technical Barriers to Trade (TBT) Committee.*

2. Referenced Documents

2.1 *ASTM Standards:*[2]

B368 Test Method for Copper-Accelerated Acetic Acid-Salt Spray (Fog) Testing (CASS Test)

D609 Practice for Preparation of Cold-Rolled Steel Panels for Testing Paint, Varnish, Conversion Coatings, and Related Coating Products

D1193 Specification for Reagent Water

D1654 Test Method for Evaluation of Painted or Coated Specimens Subjected to Corrosive Environments

E70 Test Method for pH of Aqueous Solutions With the Glass Electrode

E691 Practice for Conducting an Interlaboratory Study to Determine the Precision of a Test Method

G85 Practice for Modified Salt Spray (Fog) Testing

3. Significance and Use

3.1 This practice provides a controlled corrosive environment which has been utilized to produce relative corrosion resistance information for specimens of metals and coated metals exposed in a given test chamber.

3.2 Prediction of performance in natural environments has seldom been correlated with salt spray results when used as stand alone data.

3.2.1 Correlation and extrapolation of corrosion performance based on exposure to the test environment provided by this practice are not always predictable.

3.2.2 Correlation and extrapolation should be considered only in cases where appropriate corroborating long-term atmospheric exposures have been conducted.

3.3 The reproducibility of results in the salt spray exposure is highly dependent on the type of specimens tested and the evaluation criteria selected, as well as the control of the operating variables. In any testing program, sufficient replicates should be included to establish the variability of the results. Variability has been observed when similar specimens are tested in different fog chambers even though the testing conditions are nominally similar and within the ranges specified in this practice.

4. Apparatus

4.1 The apparatus required for salt spray (fog) exposure consists of a fog chamber, a salt solution reservoir, a supply of suitably conditioned compressed air, one or more atomizing nozzles, specimen supports, provision for heating the chamber, and necessary means of control. The size and detailed construction of the apparatus are optional, provided the conditions obtained meet the requirements of this practice.

[1] This practice is under the jurisdiction of ASTM Committee G01 on Corrosion of Metals and is the direct responsibility of Subcommittee G01.05 on Laboratory Corrosion Tests.

Current edition approved Nov. 1, 2019. Published December 2019. Originally approved in 1939. Last previous edition approved in 2018 as B117–18. DOI: 10.1520/B0117–19.

[2] For referenced ASTM standards, visit the ASTM website, www.astm.org, or contact ASTM Customer Service at service@astm.org. For *Annual Book of ASTM Standards* volume information, refer to the standard's Document Summary page on the ASTM website.

4.2 Drops of solution which accumulate on the ceiling or cover of the chamber shall not be permitted to fall on the specimens being exposed.

4.3 Drops of solution which fall from the specimens shall not be returned to the solution reservoir for respraying.

4.4 Material of construction shall be such that it will not affect the corrosiveness of the fog.

4.5 All water used for this practice shall conform to Type IV water in Specification D1193 (except that for this practice limits for chlorides and sodium may be ignored). This does not apply to running tap water. All other water will be referred to as reagent grade.

NOTE 1—Water used with a conductivity ≤1.0 µS/cm (or resistivity ≥1.0 MΩ·cm) may cause damage to some equipment due to the reactive nature of the water. In addition, it may cause issues with stabilizing pH measurements.

5. Test Specimens

5.1 The type and number of test specimens to be used, as well as the criteria for the evaluation of the test results, shall be defined in the specifications covering the material or product being exposed or shall be mutually agreed upon between the purchaser and the seller.

6. Preparation of Test Specimens

6.1 Specimens shall be suitably cleaned. The cleaning method shall be optional depending on the nature of the surface and the contaminants. Care shall be taken that specimens are not recontaminated after cleaning by excessive or careless handling.

6.2 Specimens for the evaluation of paints and other organic coatings shall be prepared in accordance with applicable specification(s) for the material(s) being exposed, or as agreed upon between the purchaser and the supplier. Otherwise, the test specimens shall consist of steel meeting the requirements of Practice D609 and shall be cleaned and prepared for coating in accordance with the applicable procedure of Practice D609.

6.3 Specimens coated with paints or nonmetallic coatings shall not be cleaned or handled excessively prior to test.

6.4 Whenever it is desired to determine the development of corrosion from an abraded area in the paint or organic coating, a scratch or scribed line shall be made through the coating with a sharp instrument so as to expose the underlying metal before testing. The conditions of making the scratch shall be as defined in Test Method D1654, unless otherwise agreed upon between the purchaser and the seller.

6.5 Unless otherwise specified, the cut edges of plated, coated, or duplex materials and areas containing identification marks or in contact with the racks or supports shall be protected with a suitable coating stable under the conditions of the practice.

NOTE 2—Should it be desirable to cut test specimens from parts or from preplated, painted, or otherwise coated steel sheet, the cut edges shall be protected by coating them with paint, wax, tape, or other effective media so that the development of a galvanic effect between such edges and the adjacent plated or otherwise coated metal surfaces, is prevented.

7. Position of Specimens During Exposure

7.1 The position of the specimens in the salt spray chamber during the test shall be such that the following conditions are met:

7.1.1 Unless otherwise specified, the specimens shall be supported or suspended with the surface of interest at an angle between 15° and 30° from the vertical. It is recommended that the orientation of specimens in the cabinet be consistent to minimize variability.

7.1.2 The specimens shall not contact each other or any metallic material or any material capable of acting as a wick.

7.1.3 Each specimen shall be placed to permit unencumbered exposure to the fog.

7.1.4 Salt solution from one specimen shall not drip on any other specimen.

NOTE 3—Suitable materials for the construction or coating of racks and supports are glass, rubber, plastic, or suitably coated wood. Bare metal shall not be used. Specimens shall preferably be supported from the bottom or the side. Slotted wooden strips are suitable for the support of flat panels. Suspension from glass hooks or waxed string may be used as long as the specified position of the specimens is obtained, if necessary by means of secondary support at the bottom of the specimens.

8. Salt Solution

8.1 The salt solution shall be prepared by dissolving 5 ± 1 parts by mass of sodium chloride in 95 parts of water conforming to Type IV water in Specification D1193 (except that for this practice limits for chlorides and sodium may be ignored). Careful attention should be given to the chemical content of the salt. The salt used shall be sodium chloride with not more than 0.3 % by mass of total impurities. Halides (Bromide, Fluoride, and Iodide) other than Chloride shall constitute less than 0.1 % by mass of the salt content. Copper content shall be less than 0.3 ppm by mass. Sodium chloride that has had anti-caking agents added shall not be used because such agents may act as corrosion inhibitors. See Table 1 for a listing of these impurity restrictions. Upon agreement between the purchaser and the seller, analysis may be required and limits established for elements or compounds not specified in the chemical composition given above.

8.2 The pH of the salt solution shall be such that when atomized at 35 °C (95 °F) the collected solution will be in the pH range from 6.5 to 7.2 (Note 4). Before the solution is atomized it shall be free of suspended solids (Note 5). The pH measurement shall be made at 23 °C ± 3 °C (73 °F ± 5 °F) using a suitable glass pH-sensing electrode, reference electrode, and pH meter system in accordance with Test Method E70. pH measurement shall be recorded once daily (except on weekends, or holidays when the salt spray test is not interrupted for exposing, rearranging, or removing test specimens or to check and replenish the solution in the reservoir. The maximum interval between pH measurements shall not exceed 96 h). Only diluted, reagent grade hydrochloric acid (HCl) or reagent grade sodium hydroxide (NaOH) shall be used to adjust the pH.

NOTE 4—Temperature affects the pH of a salt solution prepared from water saturated with carbon dioxide at room temperature and pH adjustment may be made by the following three methods:

TABLE 1 Maximum Allowable Limits for Impurity Levels in Sodium Chloride[A,B,C]

NOTE 1—A measurable limit for anti-caking agents is *not* being defined as a result of how salt is manufactured. During salt manufacturing, it is common practice to create salt slurry from the raw salt mined. A crystallization process then captures the pure salt from this slurry. Some naturally occurring anti-caking agents can be formed in this process and are not removed from the resultant product. Avoid salt products where extra anti-caking agents are added. Additionally, when doing an elemental analysis of salt, there can be trace elements present that are either a stand-alone element or part of an anti-caking agent. It is not economically feasible to know where such elements came from due to the long list of possible anti-caking agents for which there would have to be testing. Therefore, a salt product that meets the impurity, halide, and copper limits with no anti-caking agents added will be acceptable. The salt supplier can provide an analysis of the salt with a statement indicating that anti-caking agents were not added to the product.

Impurity Description	Allowable Amount
Total Impurities	≤ 0.3 %
Halides (Bromide, Fluoride and Iodide) excluding Chloride	< 0.1 %
Copper	< 0.3 ppm
Anti-caking Agents	None Added

[A] A common formula used to calculate the amount of salt required by mass to achieve a 5 % salt solution of a known mass of water is:

$$0.053 \times \textit{Mass of Water} = \textit{Mass of NaCl required}$$

The mass of water is 1 g per 1 mL. To calculate the mass of salt required in grams to mix 1 L of a 5 % salt solution, multiply 0.053 g by 1000 g (35.27 oz, the mass of 1 L of water). This formula yields a result of 53 g (1.87 oz) of NaCl required for each litre of water to achieve a 5 % salt solution by mass.

The 0.053 multiplier for the sodium chloride used above is derived by the following:

1000 g (mass of a full litre of water) divided by 0.95
(water is only 95 % of the total mixture by mass) yields 1053 g

This 1053 g is the total mass of the mixture of 1 L of water with a 5 % sodium chloride concentration. 1053 g minus the original weight of the litre of water, 1000 g, yields 53 g for the weight of the sodium chloride. 53 g of total sodium chloride divided by the original 1000 g of water yields a 0.053 multiplier for the sodium chloride.

As an example: to mix the equivalent of 200 L (52.83 gal) of 5 % sodium chloride solution, mix 10.6 kg (23.37 lb) of sodium chloride into 200 L (52.83 gal) of water. 200 L of water weighs 200 000 g. 200 000 g of water × 0.053 (sodium chloride multiplier) = 10 600 g of sodium chloride, or 10.6 kg.

[B] In order to ensure that the proper salt concentration was achieved when mixing the solution, it is recommended that the solution be checked with either a salimeter hydrometer or specific gravity hydrometer. When using a salimeter hydrometer, the measurement should be between 4 % and 6 % at 25 °C (77 °F).

[C] If the purity of the salt used is >99.9 %, then the limits for halides can be ignored. This is due to the fact that the halides cannot be ≥0.1% with a salt purity of >99.9 %. If the salt used is of lower purity, then test for halides.

(*1*) When the pH of a salt solution is adjusted at room temperature, and atomized at 35 °C (95 °F), the pH of the collected solution will be higher than the original solution due to the loss of carbon dioxide at the higher temperature. When the pH of the salt solution is adjusted at room temperature, it is therefore necessary to adjust it below 6.5 so the collected solution after atomizing at 35 °C (95 °F) will meet the pH limits of 6.5 to 7.2. Take about a 50 mL sample of the salt solution as prepared at room temperature, boil gently for 30 s, cool, and determine the pH. When the pH of the salt solution is adjusted to 6.5 to 7.2 by this procedure, the pH of the atomized and collected solution at 35 °C (95 °F) will come within this range.

(*2*) Heating the salt solution to boiling and cooling to 35 °C (95 °F) and maintaining it at 35 °C (95 °F) for approximately 48 h before adjusting the pH produces a solution the pH of which does not materially change when atomized at 35 °C (95 °F).

(*3*) Heating the water from which the salt solution is prepared to 35 °C (95 °F) or above, to expel carbon dioxide, and adjusting the pH of the salt solution within the limits of 6.5 to 7.2 produces a solution the pH of which does not materially change when atomized at 35 °C (95 °F).

NOTE 5—The freshly prepared salt solution may be filtered or decanted before it is placed in the reservoir, or the end of the tube leading from the solution to the atomizer may be covered with a double layer of cheesecloth to prevent plugging of the nozzle.

NOTE 6—The pH can be adjusted by additions of dilute ACS reagent grade hydrochloric acid or sodium hydroxide solutions.

9. Air Supply

9.1 The compressed air supply to the Air Saturator Tower shall be free of grease, oil, and dirt before use by passing through well-maintained filters (Note 7). This air should be maintained at a sufficient pressure at the base of the Air Saturator Tower to meet the suggested pressures of Table 2 at the top of the Air Saturator Tower.

NOTE 7—The air supply may be freed from oil and dirt by passing it through a suitable oil/water extractor (that is commercially available) to stop any oil from reaching the Air Saturator Tower. Many oil/water extractors have an expiration indicator, proper preventive maintenance intervals should take these into account.

9.2 The compressed air supply to the atomizer nozzle or nozzles shall be conditioned by introducing it into the bottom of a tower filled with water. A common method of introducing the air is through an air dispersion device (X1.4.1). The level of the water must be maintained automatically to ensure adequate humidification. It is common practice to maintain the temperature in this tower between 46 °C and 49 °C (114 °F and 121 °F) to offset the cooling effect of expansion to atmospheric pressure during the atomization process. Table 2 shows the temperature, at different pressures, that are commonly used to offset the cooling effect of expansion to atmospheric pressure.

9.3 Careful attention should be given to the relationship of tower temperature to pressure since this relationship can have a direct impact to maintaining proper collection rates (Note 8). It is preferable to saturate the air at temperatures well above the chamber temperature as insurance of a wet fog as listed in Table 2.

NOTE 8—If the tower is run outside of these suggested temperature and pressure ranges to achieve proper collection rates as described in 10.2 of this practice, other means of verifying the proper corrosion rate in the chamber should be investigated, such as the use of control specimens (panels of known performance in the test conducted). It is preferred that control panels be provided that bracket the expected test specimen performance. The controls allow for the normalization of test conditions during repeated running of the test and will also allow comparisons of test results from different repeats of the same test. (Refer to Appendix X3, Evaluation of Corrosive Conditions, for mass loss procedures).

10. Conditions in the Salt Spray Chamber

10.1 *Temperature*—The exposure zone of the salt spray chamber shall be maintained at 35 °C ± 2 °C (95 °F ± 3 °F). Each set point and its tolerance represents an operational control point for equilibrium conditions at a single location in

TABLE 2 Suggested Temperature and Pressure Guideline for the Top of the Air Saturator Tower for the Operation of a Test at 35 °C (95 °F)

Air Pressure, kPa	Temperature, °C	Air Pressure, psi	Temperature, °F
83	46	12	114
96	47	14	117
110	48	16	119
124	49	18	121

the cabinet which may not necessarily represent the uniformity of conditions throughout the cabinet. The temperature within the exposure zone of the closed cabinet shall be recorded (Note 9) at least once daily (except on Saturdays, Sundays, and holidays when the salt spray test is not interrupted for exposing, rearranging, or removing test specimens or to check and replenish the solution in the reservoir)

NOTE 9—A suitable method to record the temperature is by a continuous recording device or by a thermometer which can be read from outside the closed cabinet. The recorded temperature must be obtained with the salt spray chamber closed to avoid a false low reading because of wet-bulb effect when the chamber is open.

10.2 *Atomization and Quantity of Fog*—Place at least two clean fog collectors per atomizer tower within the exposure zone so that no drops of solution will be collected from the test specimens or any other source. Position the collectors in the proximity of the test specimens, one nearest to any nozzle and the other farthest from all nozzles. A typical arrangement is shown in Fig. 1. The fog shall be such that for each 80 cm^2 (12.4 $in.^2$) of horizontal collecting area, there will be collected from 1.0 mL to 2.0 mL of solution per hour based on an average run of at least 16 h (Note 11). The sodium chloride concentration of the collected solution shall be 5 % ± 1 mass % (Notes 11-13). The pH of the collected solution shall be 6.5 to 7.2. The pH measurement shall be made as described in 8.2 (Note 4). Both sodium chloride concentration and volume of condensate collected (measured in mL) shall be recorded once daily (except on weekends, or holidays when the salt spray test is not interrupted for exposing, rearranging, or removing test specimens or to check and replenish the solution in the reservoir. The maximum interval between these data collection measurements shall not exceed 96 h).

NOTE 10—Common methods of measuring sodium chloride concentration are specific gravity hydrometer, salimeter hydrometer, refractometer, and titration. This list is not all inclusive of every method, and an appropriate method can be chosen by the user.

NOTE 11—Suitable collecting devices are glass or plastic funnels with the stems inserted through stoppers into graduated cylinders, or crystallizing dishes. Funnels and dishes with a diameter of 10 cm (3.94 in.) have an area of about 80 cm^2 (12.4 $in.^2$).

NOTE 12—The specific gravity of salt solution will change with temperature. Table 3 shows salt concentration and density versus temperature[3] and can be used to determine if the sample measured is within specification. The sample to be measured may be a composite sample from multiple fog-collecting devices within a single cabinet, if necessary, to obtain sufficient solution volume for measurement.

Table 3 shows the salt concentration and salt density of 4 %, 5 %, and 6 % salt solution between 20 °C and 40 °C. A measurement that falls within the range between 4 % and 6 % is acceptable.

It is important to understand the equipment being used to measure specific gravity. One common practice for specific gravity measurement is the use of a hydrometer. If used, careful attention to the hydrometer type is important as most are manufactured and calibrated for measurements at 15.6 °C (60 °F). Since salt density is temperature dependent, an offset will be necessary to make an accurate measurement at other temperatures. Contact the hydrometer manufacturer to find the proper offset for the hydrometer being used.

NOTE 13—Salt solutions from 2 % to 6 % will give the same results, though for uniformity the limits are set at 4 % to 6 %.

10.3 The nozzle or nozzles shall be so directed or baffled that none of the spray can impinge directly on the test specimens.

11. Continuity of Exposure

11.1 Unless otherwise specified in the specifications covering the material or product being tested, the test shall be continuous for the duration of the entire test period. Continuous operation implies that the chamber be closed and the spray operating continuously except for the short daily interruptions

[3] "Thermodynamic Properties of the NaCl + H2O system II. Thermodynamic Properties of NaCl(aq), NaCl.2H2O(cr), and Phase Equilibria," *Journal of Physics and Chemistry Reference Data*, Vol. 21, No. 4, 1992.

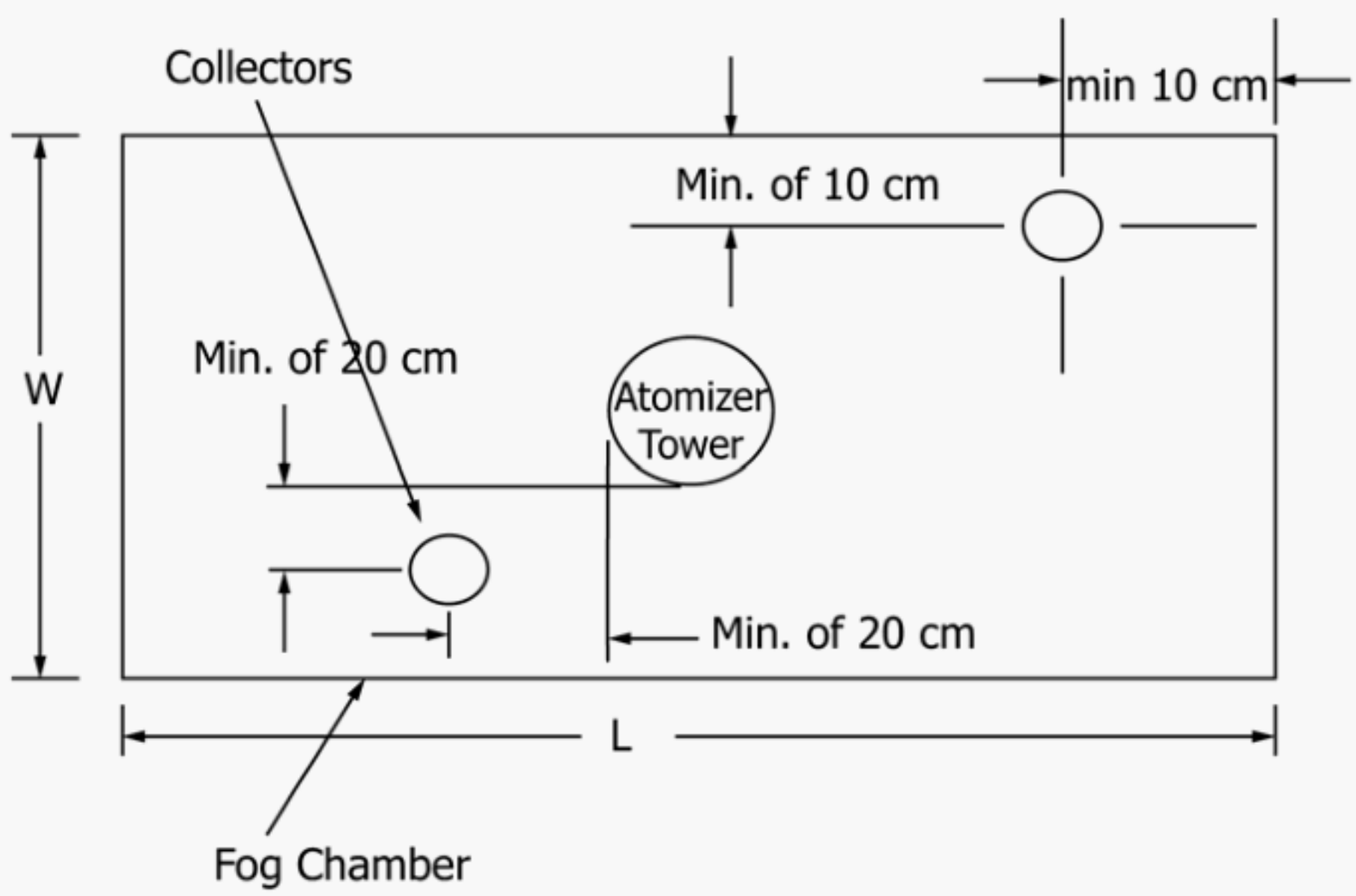

NOTE 1—This figure shows a typical fog collector arrangement for a single atomizer tower cabinet. The same fog collector arrangement is also applicable for multiple atomizer tower and horizontal ("T" type) atomizer tower cabinet constructions as well.

FIG. 1 Arrangement of Fog Collectors

TABLE 3 Temperature versus Density Data

Temperature °C (°F)	Density, g/cm^3		
	4-percent Salt Concentration	5-percent Salt Concentration	6-percent Salt Concentration
20 (68)	1.025758	1.032360	1.038867
21 (69.8)	1.025480	1.032067	1.038560
22 (71.6)	1.025193	1.031766	1.038245
23 (73.4)	1.024899	1.031458	1.037924
24 (75.2)	1.024596	1.031142	1.037596
25 (77)	1.024286	1.030819	1.037261
26 (78.8)	1.023969	1.030489	1.036919
27 (80.6)	1.023643	1.030152	1.036570
28 (82.4)	1.023311	1.029808	1.036215
29 (84.2)	1.022971	1.029457	1.035853
30 (86)	1.022624	1.029099	1.035485
31 (87.8)	1.022270	1.028735	1.035110
32 (89.6)	1.021910	1.028364	1.034729
33 (91.4)	1.021542	1.027986	1.034343
34 (93.2)	1.021168	1.027602	1.033950
35 (95)	1.020787	1.027212	1.033551
36 (96.8)	1.020399	1.026816	1.033146
37 (98.6)	1.020006	1.026413	1.032735
38 (100.4)	1.019605	1.026005	1.032319
39 (102.2)	1.019199	1.025590	1.031897
40 (104)	1.018786	1.025170	1.031469

necessary to inspect, rearrange, or remove test specimens, to check and replenish the solution in the reservoir, and to make necessary recordings as described in Section 10.

NOTE 14—Operations should be so scheduled that the cumulative maximum time for these interruptions are held to 60 min or less per day. It is recommended to have only one interruption per day if possible. If interruption time is longer that 60 min, it should be noted in the test report.

12. Period of Exposure

12.1 The period of exposure shall be as designated by the specifications covering the material or product being tested or as mutually agreed upon between the purchaser and the seller.

NOTE 15—Recommended exposure periods are to be as agreed upon between the purchaser and the seller, but exposure periods of multiples of 24 h are suggested.

13. Cleaning of Tested Specimens

13.1 Unless otherwise specified in the specifications covering the material or product being tested, specimens shall be treated as follows at the end of the test:

13.1.1 The specimens shall be carefully removed.

13.2 Specimens may be gently washed or dipped in clean running water not warmer than 38 °C (100 °F) to remove salt deposits from their surface, and then immediately dried.

14. Evaluation of Results

14.1 A careful and immediate examination shall be made as required by the specifications covering the material or product being tested or by agreement between the purchaser and the seller.

15. Records and Reports

15.1 The following information shall be recorded, unless otherwise prescribed in the specifications covering the material or product being tested:

15.1.1 Type of salt and water used in preparing the salt solution.

15.1.2 All readings of temperature within the exposure zone of the chamber.

15.1.3 Data obtained from each fog-collecting device of volume of salt solution collected in millilitres per hour per 80 cm^2 (12.4 in.^{2}).

15.1.4 Concentration or specific gravity of collected solution and the temperature of that solution when measured. Follow Table 3 for salt concentration and density versus temperature to determine that the sample measured is within specification. Sample to be measured may be a composite sample from multiple fog-collecting devices (within a single cabinet), if necessary to obtain sufficient solution volume for measurement.

15.1.5 pH of collected solution at 23 °C ± 3 °C (73 °F ± 5 °F). Sample to be measured may be a composite sample from multiple fog-collecting devices (within a single cabinet), if necessary to obtain sufficient solution volume for measurement.

15.2 Type of specimen and its dimensions, or number or description of part,

15.3 Method of cleaning specimens before and after testing,

15.4 Method of supporting or suspending article in the salt spray chamber,

15.5 Description of protection used as required in 6.5,

15.6 Exposure period,

15.7 Interruptions in exposure, cause, and length of time, and

15.8 Results of all inspections.

NOTE 16—If any of the atomized salt solution which has not contacted the test specimens is returned to the reservoir, it is advisable to record the concentration or specific gravity of this solution also.

16. Keywords

16.1 controlled corrosive environment; corrosive conditions; determining mass loss; salt spray (fog) exposure

APPENDIXES

(Nonmandatory Information)

X1. CONSTRUCTION OF APPARATUS

X1.1 Cabinets

X1.1.1 Standard salt spray cabinets are available from several suppliers, but certain pertinent accessories are required before they will function according to this practice and provide consistent control for duplication of results.

X1.1.2 The salt spray cabinet consists of the basic chamber, an air-saturator tower, a salt solution reservoir, atomizing nozzles, specimen supports, provisions for heating the chamber, and suitable controls for maintaining the desired temperature.

X1.1.3 Accessories such as a suitable adjustable baffle or central fog tower, automatic level control for the salt reservoir, and automatic level control for the air-saturator tower are pertinent parts of the apparatus.

X1.1.4 The size and shape of the cabinet shall be such that the atomization and quantity of collected solution is within the limits of this practice.

X1.1.5 The chamber shall be made of suitably inert materials such as plastic, glass, or stone, or constructed of metal and lined with impervious plastics, rubber, or epoxy-type materials or equivalent.

X1.1.6 All piping that contacts the salt solution or spray should be of inert materials such as plastic. Vent piping should be of sufficient size so that a minimum of back pressure exists and should be installed so that no solution is trapped. The exposed end of the vent pipe should be shielded from extreme air currents that may cause fluctuation of pressure or vacuum in the cabinet.

X1.2 Temperature Control

X1.2.1 The maintenance of temperature within the salt chamber can be accomplished by several methods. It is generally desirable to control the temperature of the surroundings of the salt spray chamber and to maintain it as stable as possible. This may be accomplished by placing the apparatus in a constant-temperature room, but may also be achieved by surrounding the basic chamber of a jacket containing water or air at a controlled temperature.

X1.2.2 The use of immersion heaters in an internal salt solution reservoir or within the chamber is detrimental where heat losses are appreciable because of solution evaporation and radiant heat on the specimens.

X1.3 Spray Nozzles

X1.3.1 Satisfactory nozzles may be made of hard rubber, plastic, or other inert materials. The most commonly used type is made of plastic. Nozzles calibrated for air consumption and solution-atomized are available. The operating characteristics of a typical nozzle are given in Table X1.1.

X1.3.2 It can readily be seen that air consumption is relatively stable at the pressures normally used, but a marked reduction in solution sprayed occurs if the level of the solution is allowed to drop appreciably during the test. Thus, the level of the solution in the salt reservoir must be maintained automatically to ensure uniform fog delivery during the test.[4]

X1.3.3 If the nozzle selected does not atomize the salt solution into uniform droplets, it will be necessary to direct the spray at a baffle or wall to pick up the larger drops and prevent them from impinging on the test specimens. Pending a complete understanding of air-pressure effects, and so forth, it is important that the nozzle selected shall produce the desired condition when operated at the air pressure selected. Nozzles are not necessarily located at one end, but may be placed in the center and can also be directed vertically up through a suitable tower.

X1.4 Air for Atomization

X1.4.1 The air used for atomization must be free of grease, oil, and dirt before use by passing through well-maintained

[4] A suitable device for maintaining the level of liquid in either the saturator tower or reservoir of test solution may be designed by a local engineering group, or it may be purchased from manufacturers of test cabinets as an accessory.

TABLE X1.1 Operating Characteristics of Typical Spray Nozzle

Siphon Height, cm	Air Flow, dm^3/min				Solution Consumption, cm^3/h			
	Air Pressure, kPa				Air Pressure, kPa			
	34	69	103	138	34	69	103	138
10	19	26.5	31.5	36	2100	3840	4584	5256
20	19	26.5	31.5	36	636	2760	3720	4320
30	19	26.5	31.5	36	0	1380	3000	3710
40	19	26.6	31.5	36	0	780	2124	2904

Siphon Height, in.	Air Flow, L/min				Solution Consumption, mL/h			
	Air Pressure, psi				Air Pressure, psi			
	5	10	15	20	5	10	15	20
4	19	26.5	31.5	36	2100	3840	4584	5256
8	19	26.5	31.5	36	636	2760	3720	4320
12	19	26.5	31.5	36	0	1380	3000	3710
16	19	26.6	31.5	36	0	780	2124	2904

filters. Room air may be compressed, heated, humidified, and washed in a water-sealed rotary pump if the temperature of the water is suitably controlled. Otherwise cleaned air may be introduced into the bottom of a tower filled with water through a porous stone or multiple nozzles. The level of the water must be maintained automatically to ensure adequate humidification. A chamber operated in accordance with this method and Appendix X1 will have a relative humidity between 95 % and 98 %. Since salt solutions from 2 % to 6 % will give the same results (though for uniformity the limits are set at 4 % to 6 %), it is preferable to saturate the air at temperatures well above the chamber temperature as insurance of a wet fog. Table X1.2 shows the temperatures, at different pressures, that are required to offset the cooling effect of expansion to atmospheric pressure.

TABLE X1.2 Temperature and Pressure Requirements for Operation of Test at 95 °F

	Air Pressure, kPa			
	83	96	110	124
Temperature, °C	46	47	48	49
	Air Pressure, psi			
	12	14	16	18
Temperature, °F	114	117	119	121

X1.4.2 Experience has shown that most uniform spray chamber atmospheres are obtained by increasing the atomizing air temperature sufficiently to offset heat losses, except those that can be replaced otherwise at very low-temperature gradients.

X1.5 Types of Construction

X1.5.1 A modern laboratory cabinet is shown in Fig. X1.1. Walk-in chambers are usually constructed with a sloping ceiling. Suitably located and directed spray nozzles avoid ceiling accumulation and drip. Nozzles may be located at the ceiling, or 0.91 m (3 ft) from the floor directed upward at 30° to 60° over a passageway. The number of nozzles depends on type and capacity and is related to the area of the test space. An 11 L to 19 L (3 gal to 5 gal) reservoir is required within the chamber, with the level controlled. The major features of a walk-in type cabinet, which differs significantly from the laboratory type, are illustrated in Fig. X1.2. Construction of a plastic nozzle, such as is furnished by several suppliers, is shown in Fig. X1.3.

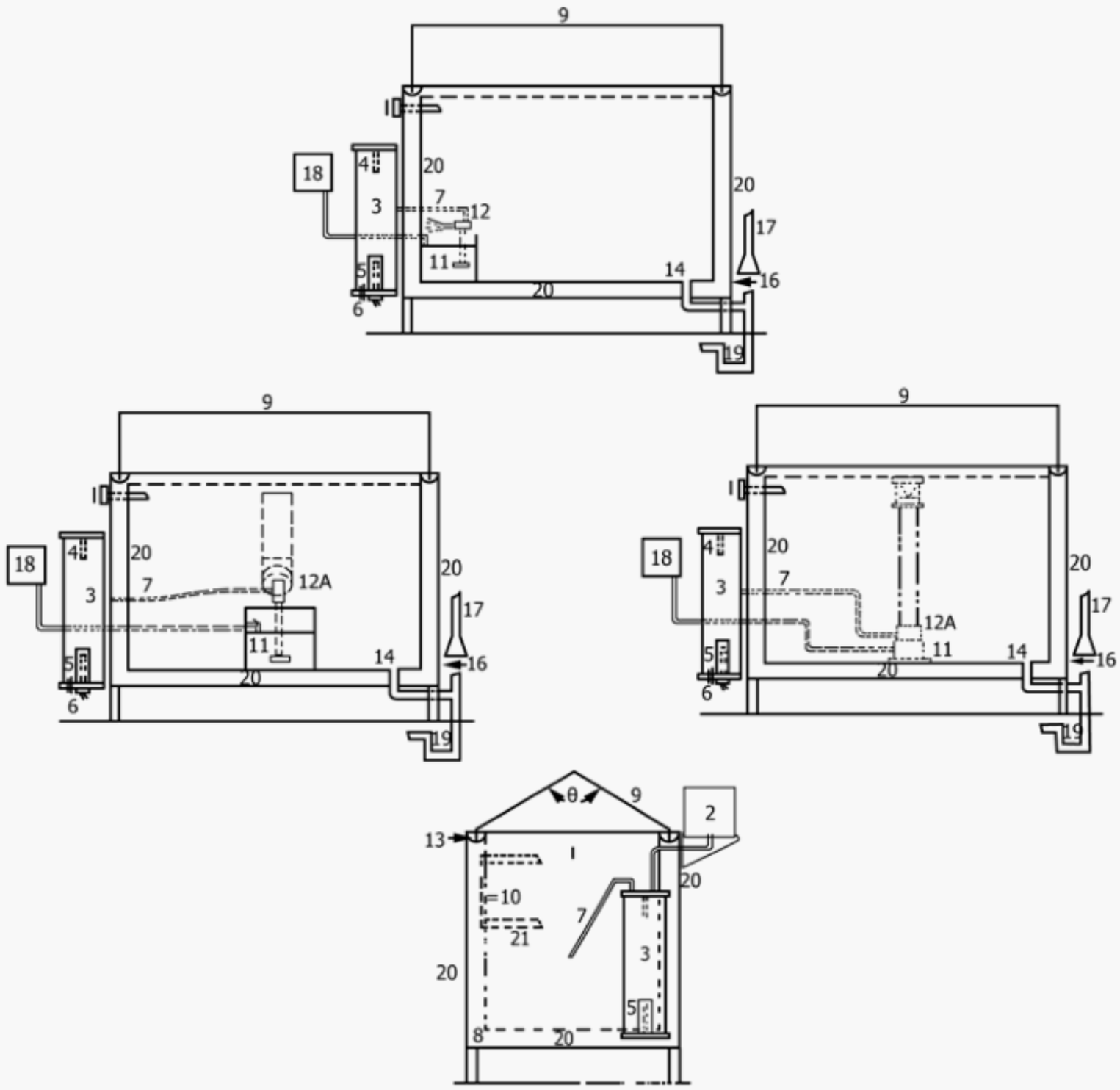

NOTE 1—This figure shows the various components including alternate arrangements of the spray nozzles and solution reservoir.

θ—Angle of lid, 90 to 125°
1—Thermometer and thermostat for controlling heater (Item No. 8) in base
2—Automatic water leveling device
3—Humidifying tower
4—Automatic temperature regulator for controlling heater (Item No. 5)
5—Immersion heater, nonrusting
6—Air inlet, multiple openings
7—Air tube to spray nozzle
8—Heater in base
9—Hinged top, hydraulically operated, or counterbalanced
10—Brackets for rods supporting specimens, or test table
11—Internal reservoir
12—Spray nozzle above reservoir, suitably designed, located, and baffled
12A—Spray nozzle housed in dispersion tower located preferably in center of cabinet (typical examples)
13—Water seal
14—Combination drain and exhaust. Exhaust at opposite side of test space from spray nozzle (Item 12), but preferably in combination with drain, waste trap, and forced draft waste pipe (Items 16, 17, and 19)
15—number not used
16—Complete separation between forced draft waste pipe (Item 17) and combination drain and exhaust (Items 14 and 19) to avoid undesirable suction or back pressure
17—Forced draft waste pipe
18—Automatic leveling device for reservoir
19—Waste trap
20—Air space or water jacket
21—Test table or rack, well below roof area

FIG. X1.1 Typical Salt Spray Cabinet

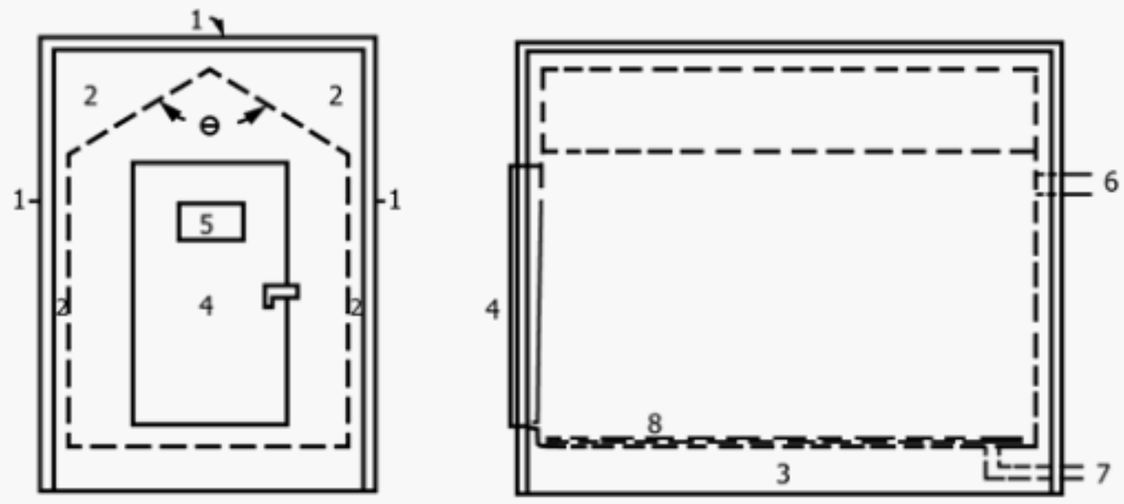

NOTE 1—The controls are the same, in general as for the smaller laboratory type cabinet (Fig. X1.1), but are sized to care for the larger cube. The chamber has the following features:

θ—Angle of ceiling, 90 to 125°
1—Heavy insulated outer panels
2—Air space
3—Low-watt density heaters, or steam coils
4—Single- or double-, full-opening door (refrigeration type), with inward sloping door sill
5—Viewing window/s
6—Inner chamber vent
7—Inner chamber drain
8—Duct boards on floor

FIG. X1.2 Walk-in Chamber, 1.5 m by 2.4 m (5 ft by 8 ft) and Upward in Overall Size

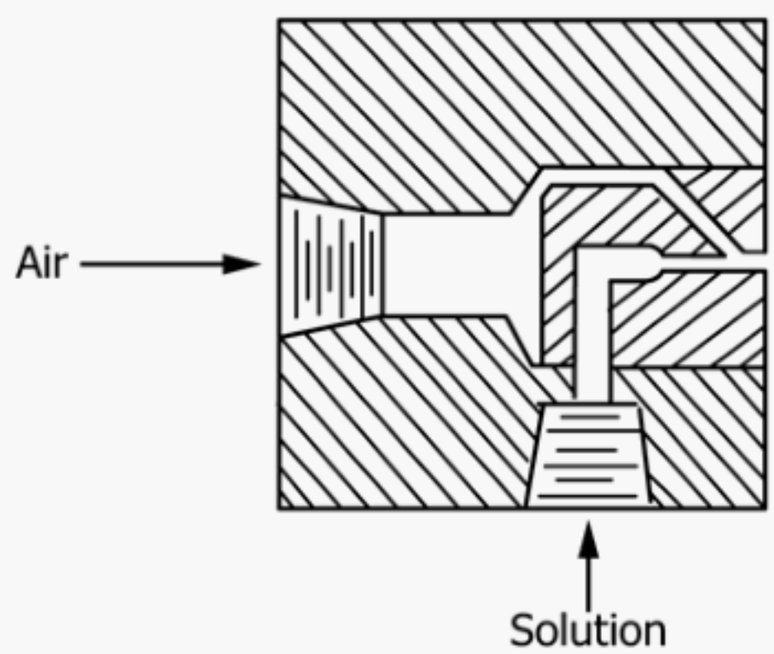

FIG. X1.3 Typical Spray Nozzle

X2. USE OF THE SALT SPRAY (FOG) TEST IN RESEARCH

X2.1 This practice is primarily used for process qualification and quality acceptance. Regarding any new applications, it is essential to correlate the results of this practice with actual field exposure results. (See Fig. X2.1.)

X2.2 The salt spray has been used to a considerable extent for the purpose of comparing different materials or finishes. It should be noted there is usually not a direct relation between salt spray (fog) resistance and resistance to corrosion in other media, because the chemistry of the reactions, including the formation of films and their protective value, frequently varies greatly with the precise conditions encountered. Informed personnel are aware of the erratic composition of basic alloys, the possibility of wide variations in quality and thickness of plated items produced on the same racks at the same time, and the consequent need for a mathematical determination of the number of specimens required to constitute an adequate sample for test purposes. In this connection it is well to point out that Practice B117 is not applicable to the study or testing of decorative chromium plate (nickel-chromium) on steel or on zinc-base die castings or of cadmium plate on steel. For this purpose Test Method B368 and Practice G85 are available, which are also considered by some to be superior for comparison of chemically treated aluminum (chromated, phosphated, or anodized), although final conclusions regarding the validity of test results related to service experience have not been reached. Practice B117 and Practice G85 are considered to be most useful in estimating the relative behavior of closely related materials in marine atmospheres, since it simulates the basic conditions with some acceleration due to either wetness or temperature, or both.

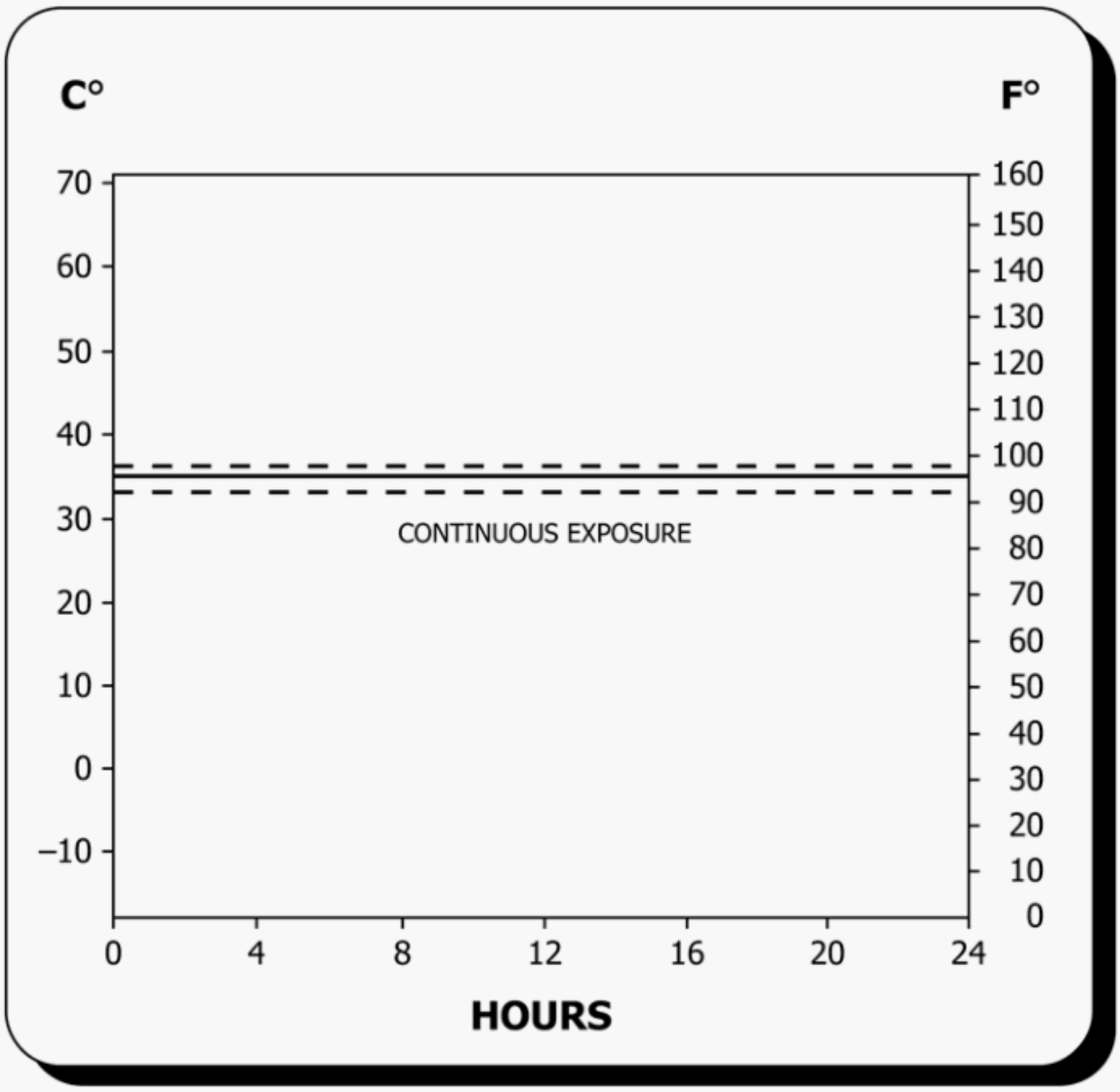

NOTE 1—Dashed chart lines indicate temperature tolerance limits.

NOTE 2—Reprinted with permission.

(1) Salt Solution—5 ± 1 parts by mass of sodium chloride (NaCl) in 95 parts by mass of Specification D1193 Type IV water.
(2) pH 6.5 to 7.2 of collected solution.
(3) The exposure zone of the salt spray chamber shall be maintained at 35 °C ± 2 °C (95 °F ± 3 °F). Each set point and its tolerance represents an operational control point for equilibrium conditions at a single location in the cabinet which may not necessarily represent the uniformity of conditions throughout the cabinet.
(4) Fog at a rate of 1.0 mL/h to 2.0 mL/h per 80 cm^2 of horizontal collection area.

FIG. X2.1 Standard Practice for Operating Salt Spray (Fog) Apparatus

X3. EVALUATION OF CORROSIVE CONDITIONS

X3.1 *General*—This appendix covers test panels and procedures for evaluating the corrosive conditions within a salt spray cabinet. The procedure involves the exposure of steel test panels and the determination of their mass losses in a specified period of time. This may be done monthly or more frequently to ensure consistent operation over time. It is also useful for correlating the corrosive conditions among different cabinets.

X3.2 *Test Panels*—The required test panels, 76 mm by 127 mm by 0.8 mm (3.0 in. by 5.0 in. by 0.0315 in.), are made from SAE 1008 commercial-grade cold-rolled carbon steel (UNS G10080).

X3.3 *Preparation of Panels Before Testing*—Clean panels before testing by degreasing only, so that the surfaces are free of dirt, oil, or other foreign matter that could influence the test results. After cleaning, weigh each panel on an analytical balance to the nearest 1.0 mg and record the mass.

X3.4 *Positioning of Test Panels*—Place a minimum of two weighed panels in the cabinet, with the 127 mm (5.0 in.) length supported 30° from vertical. Place the panels in the proximity of the condensate collectors. (See Section 6.)

X3.5 *Duration of Test*—Expose panels to the salt fog for 48 h to 168 h.

X3.6 *Cleaning of Test Panels After Exposure*—After removal of the panels from the cabinet, rinse each panel immediately with running tap water to remove salt, and rinse in reagent grade water (see Specification D1193, Type IV). Chemically clean each panel for 10 min at 20 °C to 25 °C in a fresh solution prepared as follows:

> Mix 1000 mL of hydrochloric acid (sp gr 1.19) with 1000 mL reagent grade water (D1193, Type IV) and add 10 g of hexamethylene tetramine. After cleaning, rinse each panel with reagent grade water (Type IV) and dry (see 13.2).

X3.7 *Determining Mass Loss*—Immediately after drying, determine the mass loss by reweighing and subtracting panel mass after exposure from its original mass.

X3.7.1 Data generated in the interlaboratory study using this method are available from ASTM as a Research Report.[5]

X3.8 Precision and Bias—Steel Panel Test

X3.8.1 An interlaboratory test program using three different sets of UNS G10080 steel panels, 76 mm by 127 mm by 0.8 mm (3.0 in. by 5.0 in. by 0.0315 in.) has shown that the repeatability of the mass loss of the steel panels, that is, the consistency in mass loss results that may be expected when replicate panels are run simultaneously in a salt spray cabinet, is dependent upon exposure time and the panel lot or source. The interlaboratory program yielded repeatability standard deviations, S_r, from which 95 % repeatability limits, r, were calculated as follows (see Practice E691):

$$r = 2.8\ S_r \tag{X3.1}$$

X3.8.1.1 The values of S_r and r are reported in Table X3.1. Note that the corrosion rate of steel in this environment is approximately constant over the exposure interval and that the ratio of the standard deviation to the average mass loss, the coefficient of variation, Cv, varies between 5 and 10 % with a weighted average of 7.4 % and an r of ±21 % of the average mass loss.

[5] Supporting data have been filed at ASTM International Headquarters and may be obtained by requesting Research Report RR:G01-1003. Contact ASTM Customer Service at service@astm.org.

TABLE X3.1 Repeatability Statistics

NOTE 1—Based on two replicates in every test run. No. = number of different salt spray cabinets in test program; r = 95 % repeatability limits, g; $Cv = S_r$/avg, coefficient of variation, %; and S_r = repeatability standard deviations, g.

Materials	Test Duration, h	Average Mass Loss, g	S_r, g	Cv, %	r, g	No.
QP1	48	0.8170	0.0588	7.20	0.1646	12
QP1	96	1.5347	0.1048	7.28	0.2934	12
QP1	168	2.5996	0.2498	9.61	0.6994	12
AP	48	0.7787	0.0403	5.17	0.1128	10
AP	96	1.4094	0.0923	6.55	0.2584	10
AP	168	2.4309	0.1594	6.56	0.4463	10
QP2	48	0.8566	0.0686	8.01	0.1921	5
QP2	96	1.5720	0.0976	6.21	0.2733	5
QP2	168	2.7600	0.2588	9.38	0.7246	5

TABLE X3.2 Reproducibility Statistics

NOTE 1—No. = number of different salt spray cabinets in test program; R = 95 % reproduciblity limits, g; $Cv = S_R$/avg, coefficient of variation, %; and S_R = reproducibility standard deviation, g.

Materials	Test Duration, h	Average Mass Loss, g	S_R, g	Cv, %	R, g	No.
QP1	48	0.8170	0.0947	11.58	0.2652	12
QP1	96	1.5347	0.2019	14.02	0.5653	12
QP1	168	2.5996	0.3255	12.52	0.9114	12
AP	48	0.7787	0.0805	10.33	0.2254	10
AP	96	1.4094	0.1626	11.54	0.4553	10
AP	168	2.4309	0.3402	14.00	0.9526	10
QP2	48	0.8566	0.1529	17.85	0.4281	5
QP2	96	1.5720	0.1319	8.39	0.3693	5
QP2	168	2.7600	0.3873	14.03	1.0844	5

X3.8.2 This interlaboratory program also produced results on the reproducibility of results, that is, the consistency of mass loss results in tests in different laboratories or in different cabinets in the same facility. This program yielded reproducibility standard deviations, S_R, from which 95 % reproducibility limits, R, were calculated as follows (See Practice E691):

$$R = 2.8\ S_R \tag{X3.2}$$

X3.8.2.1 The values of S_R and R are reported in Table X3.2. Note that the ratio of standard deviation to the average mass loss, the coefficient of variation, Cv, varies between 8 % to 18 % with a weighted average of 12.7 % and an R of ±36 % of the average mass loss.

X3.8.3 The mass loss of steel in this salt spray practice is dependent upon the area of steel exposed, the temperature, time of exposure, salt solution make up and purity, pH, spray conditions, and the metallurgy of the steel. The procedure in Appendix X3 for measuring the corrosivity of neutral salt spray cabinets with steel panels has no bias because the value of corrosivity of the salt spray is defined only in terms of this practice.

ASTM International takes no position respecting the validity of any patent rights asserted in connection with any item mentioned in this standard. Users of this standard are expressly advised that determination of the validity of any such patent rights, and the risk of infringement of such rights, are entirely their own responsibility.

This standard is subject to revision at any time by the responsible technical committee and must be reviewed every five years and if not revised, either reapproved or withdrawn. Your comments are invited either for revision of this standard or for additional standards and should be addressed to ASTM International Headquarters. Your comments will receive careful consideration at a meeting of the responsible technical committee, which you may attend. If you feel that your comments have not received a fair hearing you should make your views known to the ASTM Committee on Standards, at the address shown below.

This standard is copyrighted by ASTM International, 100 Barr Harbor Drive, PO Box C700, West Conshohocken, PA 19428-2959, United States. Individual reprints (single or multiple copies) of this standard may be obtained by contacting ASTM at the above address or at 610-832-9585 (phone), 610-832-9555 (fax), or service@astm.org (e-mail); or through the ASTM website (www.astm.org). Permission rights to photocopy the standard may also be secured from the Copyright Clearance Center, 222 Rosewood Drive, Danvers, MA 01923, Tel: (978) 646-2600; http://www.copyright.com/