This international standard was developed in accordance with internationally recognized principles on standardization established in the Decision on Principles for the Development of International Standards, Guides and Recommendations issued by the World Trade Organization Technical Barriers to Trade (TBT) Committee.

Designation: B790/B790M – 16 (Reapproved 2021)

Standard Practice for Structural Design of Corrugated Aluminum Pipe, Pipe-Arches, and Arches for Culverts, Storm Sewers, and Other Buried Conduits[1]

This standard is issued under the fixed designation B790/B790M; the number immediately following the designation indicates the year of original adoption or, in the case of revision, the year of last revision. A number in parentheses indicates the year of last reapproval. A superscript epsilon (ε) indicates an editorial change since the last revision or reapproval.

1. Scope

1.1 This practice is intended for the structural design of corrugated aluminum pipe and pipe-arches, and aluminum structural plate pipe, pipe-arches, and arches for use as culverts and storm sewers and other buried conduits. This practice is for pipe installed in a trench or embankment and subjected to highway, railroad, and aircraft loadings. It must be recognized that a buried corrugated aluminum pipe is a composite structure made up of the aluminum ring and the soil envelope, and both elements play a vital part in the structural design of this type of structure.

1.2 Corrugated aluminum pipe and pipe-arches shall be of annular fabrication using riveted seams, or of helical fabrication having a continuous lockseam.

1.3 Structural plate pipe, pipe-arches, and arches are fabricated in separate plates that when assembled at the job site by bolting form the required shape.

1.4 This practice is applicable to design in inch-pound units as Specification B790 or in SI units as Specification B790M. Inch-pound units and SI units are not necessarily equivalent. SI units are shown in brackets in the text for clarity, but they are the applicable values when the design is done in accordance with Specification B790M.

1.5 *This standard does not purport to address all of the safety concerns, if any, associated with its use. It is the responsibility of the user of this standard to establish appropriate safety, health, and environmental practices and determine the applicability of regulatory limitations prior to use.*

1.6 *This international standard was developed in accordance with internationally recognized principles on standardization established in the Decision on Principles for the Development of International Standards, Guides and Recommendations issued by the World Trade Organization Technical Barriers to Trade (TBT) Committee.*

2. Referenced Documents

2.1 *ASTM Standards:*[2]

B745/B745M Specification for Corrugated Aluminum Pipe for Sewers and Drains

B746/B746M Specification for Corrugated Aluminum Alloy Structural Plate for Field-Bolted Pipe, Pipe-Arches, and Arches

B788/B788M Practice for Installing Factory-Made Corrugated Aluminum Culverts and Storm Sewer Pipe

B789/B789M Practice for Installing Corrugated Aluminum Structural Plate Pipe for Culverts and Sewers

B864/B864M Specification for Corrugated Aluminum Box Culverts

D698 Test Methods for Laboratory Compaction Characteristics of Soil Using Standard Effort (12,400 ft-lbf/ft^3 (600 kN-m/m^3))

D1556 Test Method for Density and Unit Weight of Soil in Place by Sand-Cone Method

D2167 Test Method for Density and Unit Weight of Soil in Place by the Rubber Balloon Method

D2487 Practice for Classification of Soils for Engineering Purposes (Unified Soil Classification System)

D2937 Test Method for Density of Soil in Place by the Drive-Cylinder Method

D6938 Test Methods for In-Place Density and Water Content of Soil and Soil-Aggregate by Nuclear Methods (Shallow Depth)

2.2 *FAA Standards:*[3]

AC No. 150/5320-5D Advisory Circular, "Airport Drainage Design" Department of Transportation, Federal Aviation Administration

[1] This practice is under the jurisdiction of ASTM Committee B07 on Light Metals and Alloys and is the direct responsibility of Subcommittee B07.08 on Corrugated Aluminum Pipe and Corrugated Aluminum Structural Plate.

Current edition approved Dec. 1, 2021. Published December 2021. Originally approved in 1990. Last previous edition approved in 2016 as B790/B790M – 16. DOI: 10.1520/B0790_B0790M-16R21.

[2] For referenced ASTM standards, visit the ASTM website, www.astm.org, or contact ASTM Customer Service at service@astm.org. For *Annual Book of ASTM Standards* volume information, refer to the standard's Document Summary page on the ASTM website.

[3] Available from Standardization Documents Order Desk, DODSSP, Bldg. 4, Section D, 700 Robbins Ave., Philadelphia, PA 19111-5098. http://www.faa.gov/airports/resources/advisory_circulars/index.cfm/go/document.current/documentNumber/150_5320-5

Copyright © ASTM International, 100 Barr Harbor Drive, PO Box C700, West Conshohocken, PA 19428-2959. United States

2.3 *AASHTO Standards:*[4]
LRFD Bridge Design Specifications
LRFD Bridge Construction Specifications

2.4 *Other Standards:*[5]
American Railway Engineering and Maintenance-Of-Way Association (AREMA) Guidelines

3. Terminology

3.1 *Definitions of Terms Specific to This Standard:*

3.1.1 *arch, n*—a pipe shape that is supported on footings and does not have a full metal invert.

3.1.2 *bedding, n*—the earth or other material on which the pipe is laid consist of a thin layer of important material on top of the in-situ foundation.

3.1.3 *haunch, n*—the portion of the pipe cross section between the maximum horizontal dimension and the top of the bedding.

3.1.4 *invert, n*—the lowest portion of the pipe cross section; also, the bottom portion of the pipe.

3.1.5 *pipe, n*—a conduit having a full circular shape or, in a general contex, all structure shapes covered by this practice.

3.1.6 *pipe-arch, n*—a pipe shape consisting of an approximate semicircular top portion, small radius corners, and large radius invert.

3.1.7 *long span structures, n*—special shapes of any size having a crown or side radius greater than 13.0 ft [4000 mm]. Metal box culverts (rise/span ≤ 0.3) are not considered long-span structures and are discussed in Specification B864/B864M.

4. Symbols

4.1 The symbols used in this practice have the following significance:

A = required wall area, in.^{2}/ft [mm^2/mm],
AL = maximum highway design axle load, lbf [N],
d = depth of corrugation, in. [mm],
E = modulus of elasticity, 10×10^6 lbf/in.^{2} [69×10^3 MPa],
EL = earth load, lbf/ft^2 [kPa],
fc = critical buckling stress, lbf/in.^{2} [MPa],
FF = flexibility factor, in./lbf [mm/N],
Fu = specified minimum tensile strength,
= 31 000 lbf/in.^{2} [215 MPa] for corrugated aluminum pipe in accordance with Specification B745/B745M using Alclad Alloy 3004–H34,
= 27 000 lbf/in.^{2} [185 MPa] for corrugated aluminum pipe in accordance with Specification B745/B745M using Alclad Alloy 3004–H32,
= 35 500 lbf/in.^{2} [245 MPa] for 0.100 through 0.150 in. [2.52 through 3.81 mm] thick aluminum structural plate in accordance with Specification B746/B746M,
= 34 000 lbf/in.^{2} [235 MPa] for 0.175 through 0.250 in. [4.44 through 6.35 mm] thick aluminum structural plate in accordance with Specification B746/B746M,
Fy = specified minimum yield strength,
= 24 000 lbf/in.^{2} [165 MPa] for corrugated aluminum pipe in accordance with Specification B745/B745M using Alclad Alloy 3004–H34,
= 20 000 lbf/in.^{2} [140 MPa] for corrugated aluminum pipe in accordance with Specification B745/B745M using Alclad Alloy 3004–H32,
= 24 000 lbf/in.^{2} [165 MPa] for all other corrugated aluminum pipe and structural plate in accordance with Specification B746/B746M,
H = depth of fill above top of pipe, ft [m],
H_{max} = maximum depth of fill, ft [m],
H_{min} = minimum depth of fill, ft [m],
I = moment of inertia of corrugation, in.^{4}/in. [mm^4/mm], see Tables 2-7),
IL = impact load, lbf/ft^2 [kPa],
k = soil stiffness factor (0.22 for good sidefill material compacted to a minimum of 90 % of standard density based on Test Method D698),
LL = live load, lbf/ft^2 [kPa],
P = total design load or pressure, lbf/ft^2 [kPa],
P_f = factored crown pressure, lbf/ft^2 [kPa],
r = radius of gyration of corrugation, in. [mm], see Tables 1-7,
r_c = corner radius of pipe-arch, ft [mm],
R_f = factored resistance for each limit state, lbf/ft [kN/m],
R_n = nominal resistance for each limit state, lbf/ft [kN/m],
s = pipe diameter or span, in. [mm],
S = pipe diameter or span, ft [m],
SF = safety factor,
SS = required seam strength, lbf/ft [kN/m],
T = thrust in pipe wall, lbf/ft [kN/m], and
T_f = factored thrust in pipe wall, lbf/ft [kN/m],
W = the unit force derived from 1 ft^3 [m^3] of fill material above the pipe, lbf/ft^3 [kN/m^3]. When the actual fill material is not known, use 120 lbf/ft^3 [19 kN/m^3],
φ = resistance factor.

[4] Available from American Association of State Highway and Transportation Officials (AASHTO), 444 N. Capitol St., NW, Suite 249, Washington, DC 20001, http://www.transportation.org.

[5] Available from AREMA Headquarters, 4501 Forbes Blvd., Suite 130, Lanham, MD 20706, Tel: +1.301.459.3200 / Fax: +1.301.459.8077, www.arema.org

NOTE 1—For pipes meeting Specification B745/B745M, both minimum yield and minimum tensile strengths are based on the H-32 temper material.

5. Basis of Design

5.1 The recommendations presented herein, represent generally accepted design practice. The design engineer shall, however, determine that these recommendations meet particular project needs.

5.2 This practice is not applicable for long-span structures. Such structures require additional design considerations for both the pipe and the soil envelope. The design of long-span structures is described in the AASHTO LRFD Bridge Design Specification.

5.3 Structures designed to this standard shall meet the requirements of this standard.

6. Loads

6.1 The design load or pressure on a pipe is comprised of earth load (EL), live load (LL), and impact load (IL). These loads are applied as a fluid pressure acting on the pipe periphery.

6.2 For aluminum pipe buried in a trench or in an embankment on a yielding foundation, loads are defined as follows:

6.2.1 *Earth Load*—The earth load *EL* is the weight of the column of soil directly above the pipe calculated as:

$$EL = HW \tag{1}$$

6.2.2 *Live Loads*—The live load *LL* is that portion of the weight of the vehicle, train, or aircraft moving over the pipe that is distributed through the soil to the pipe.

6.2.2.1 *Live Loads Under Highways*—Live load pressures for H20 highway loadings, including impact effects, are as follows. Note the current AASHTO designation for the design vehicular live load is HL-93. Refer to AASHTO for vehicle information.

Height of Cover, ft [mm]	H20 Live Load, lbf/ft^2 [kPa]
1 [300]	1800 [86.2]
2 [600]	800 [38.3]
3 [900]	600 [28.7]
4 [1200]	400 [19.2]
5 [1500]	250 [12.0]
6 [1800]	200 [9.6]
7 [2100]	175 [8.4]
8 [2400]	100 [4.8]
over 8 [over 2400]	neglect [neglect]

6.2.2.2 *Live Loads Under Railways*—Live load pressures for E80 railway loadings, including impact effects, are as follows. Refer to AREMA Guidelines for the design of E80 vehicles::

Height of Cover, ft [mm]	Live Load, lbf/ft^2 [kPa]
2 [600]	3800 [181.9]
5 [1500]	2400 [114.9]
8 [2400]	1600 [76.6]
10 [3000]	1100 [52.7]
12 [3600]	800 [38.3]
15 [4500]	600 [28.7]
20 [6000]	300 [14.4]
30 [9000]	100 [4.8]
over 30 [over 9000]	neglect [neglect]

Values for intermediate covers may be interpolated.

6.2.2.3 *Live Loads Under Aircraft Runways*—Because of the many different wheel configurations and weights, live load pressures for aircraft vary. Such pressures must be determined for the specific aircraft for which the installation is designed; see the FAA publication "Airport Drainage."

6.2.3 *Impact Loads*—Loads caused by the impact of moving traffic are important only at low heights of cover. Their effects have been included in live load pressures in 6.2.2.

TABLE 2 Sectional Properties of Corrugated Aluminum Sheets for Corrugation: 2 by ½ in. [51 by 13 mm] (Helical)

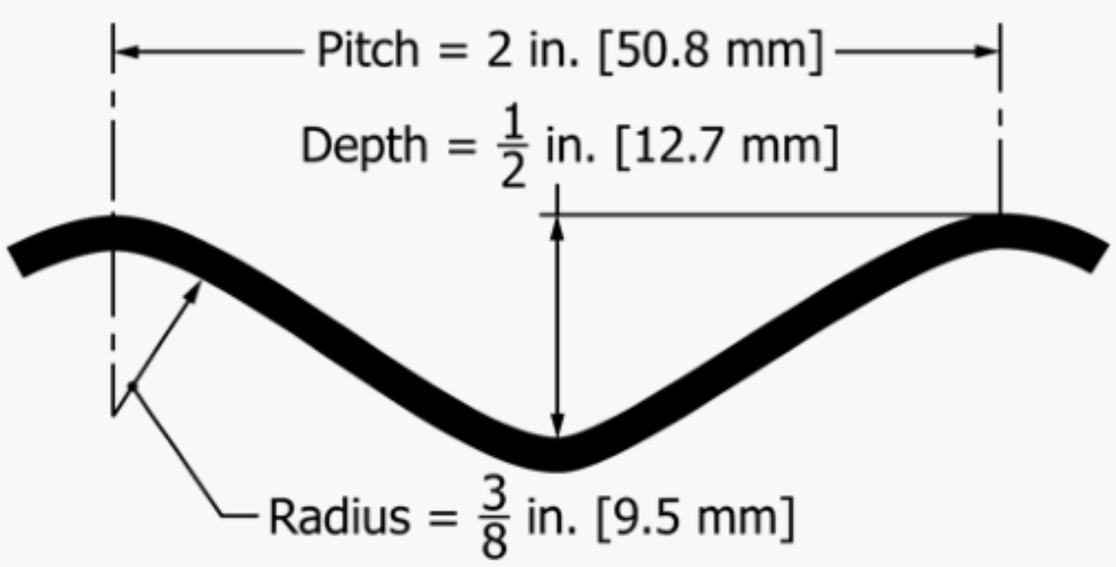

NOTE 1—Inch-pound dimensions shown in this figure are exact values used in calculating the section properties. Nominal values for some of these dimensions are used in other places in this practice.

Specified Thickness, in. [mm]	Area of Section *A*, in.^{2}/ft [mm^2/mm]	Moment of Inertia, $I \times 10^{-3}$ in.^{4}/in. [mm^4/mm]	Radius of Gyration, *r*, in. [mm]
0.048 [1.22]	0.652 [1.380]	1.533 [25.12]	0.1682 [4.272]
0.060 [1.52]	0.815 [1.725]	1.942 [31.82]	0.1690 [4.293]
0.075 [1.91]	1.019 [2.157]	2.458 [40.28]	0.1700 [4.318]
0.105 [2.67]	1.428 [3.023]	3.542 [58.04]	0.1725 [4.382]

7. Design Method

7.1 Strength requirements for wall strength, buckling strength, and seam strength may be determined by either the allowable stress design (ASD) method presented in Section 8, or the load and resistance factor design (LRFD) method presented in Section 9. Additionally, the design considerations in other paragraphs shall be followed for either design method.

8. Design by ASD Method

8.1 The thrust in the pipe wall shall be checked by three criteria. Each considers the joint function of the aluminum pipe and the surrounding soil envelope.

8.1.1 *Required Wall Area:*

8.1.1.1 Determine the design pressure and ring compression thrust in the aluminum pipe wall as follows:

$$P = EL + LL + IL \tag{2}$$

$$T = PS/2 \tag{3}$$

8.1.1.2 Determine the required wall cross-sectional area. The safety factor *SF* on the wall area is 2.

$$A = \frac{T(SF)}{fy} \tag{4}$$

TABLE 3 Sectional Properties of Corrugated Aluminum Sheets for Corrugation: 2⅔ by ½ in. [68 by 13 mm] (Helical or Annular)

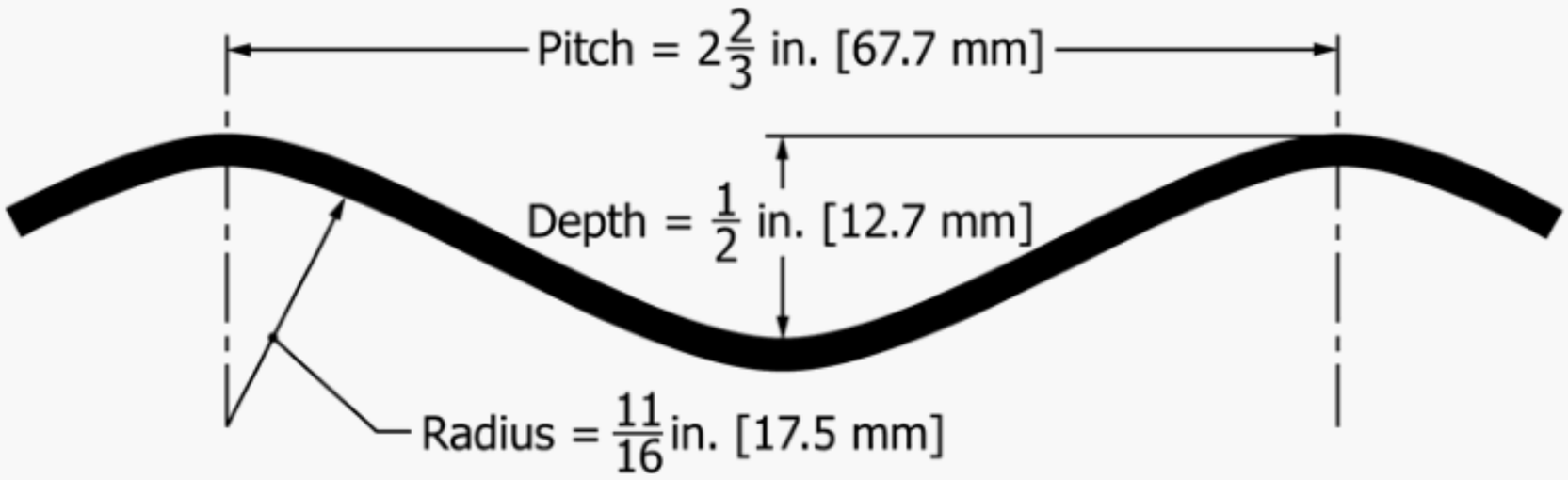

NOTE 1—Inch-pound dimensions shown in this figure are exact values used in calculating the section properties. Nominal values for some of these dimensions are used in other places in this practice.

Specified Thickness, in. [mm]	Area of Section A, in.^{2}/ft [mm^2/mm]	Moment of Inertia, $I \times 10^{-3}$ in.^{4}/in. [mm^4/mm]	Radius of Gyration, r, in. [mm]	Ultimate Longitudinal Seam Strength of Riveted Corrugated Aluminum Pipe, Pounds [kN] per Foot [metre] of Seam			
				5/16-in. [7.94 mm] Rivets		3/8-in. [9.53 mm] Rivets	
				Single[A]	Double[B]	Single[A]	Double[B]
0.060 [1.52]	0.775 [1.640]	1.892 [31.00]	0.1712 [4.348]	9000 [131]	14 000 [204]	...	...
0.075 [1.91]	0.968 [2.049]	2.392 [39.20]	0.1721 [4.371]	9000 [131]	18 000 [263]	...	...
0.105 [2.67]	1.356 [2.870]	3.425 [56.13]	0.1741 [4.422]	...	...	15 600 [228]	31 500 [460]
0.135 [3.43]	1.745 [3.694]	4.533 [74.28]	0.1766 [4.486]	...	...	16 200 [237]	33 000 [482]
0.164 [4.17]	2.130 [4.509]	5.725 [93.82]	0.1795 [4.559]	...	...	16 800 [245]	34 000 [496]

[A] Single means one row of rivets, one rivet per corrugation.
[B] Double means two rows of rivets, one rivet per corrugation per row.

Select from Tables 1-7 a wall thickness equal to or greater than the required wall area A.

8.1.2 *Critical Buckling Stress*—Check corrugations with the required wall area for possible wall buckling. If the critical buckling stress fc is less than the minimum yield stress fy, recalculate the required wall area using fc instead of fy.

$$\text{If } s < \frac{r}{k}\sqrt{\frac{24E}{fu}} \text{ then } fc = fu - \frac{fu^2}{48E}\left(\frac{ks}{r}\right)^2 \tag{5}$$

$$\text{If } s > \frac{r}{k}\sqrt{\frac{24E}{fu}} \text{ then } fc = \frac{12E}{\left(\frac{ks}{r}\right)^2} \tag{6}$$

8.1.3 *Required Seam Strength:*

8.1.3.1 Since a helical lockseam pipe has no longitudinal seams, this criterion is not valid for this type of pipe.

8.1.3.2 For pipe fabricated with longitudinal seams (riveted or bolted) the seam strength shall be sufficient to develop the thrust in the pipe wall. The safety factor SF on seam strength SS is 3. Determine the required seam strength as follows:

$$SS = T(SF) \tag{7}$$

8.1.3.3 Check the ultimate seam strengths shown in Tables 3 and 4, or Table 5. If the required seam strength exceeds that shown for the aluminum thickness already chosen, use a heavier pipe whose seam strength exceeds the required seam strength.

9. Design by LRFD Method

9.1 *Factored Loads*—The pipe shall be designed to resist the following combination of factored earth load (EL) and live load plus impact ($LL + IL$):

$$P_f = 1.95EL + 1.75(LL + IL) \tag{8}$$

9.2 *Factored Thrust*—The factored thrust, T_f, per unit length of wall shall be determined from the factored crown pressure P_f as follows:

$$T_f = P_f S/2 \tag{9}$$

9.3 *Factored Resistance*—The factored resistance (R_f) shall equal or exceed the factored thrust. R_f shall be calculated for the limit states of (*1*) wall resistance, (*2*) resistance to buckling, and (*3*) seam resistance (where applicable) as follows:

$$R_f = \varphi R_n \tag{10}$$

The resistance factor (φ) shall be as specified in Table 8. The nominal resistance (R_n) shall be calculated as specified in 9.4, 9.5, and 9.6.

9.4 *Wall Resistance*—The nominal axial resistance per unit length of wall without consideration of buckling, shall be taken as follows:

$$R_n = f_y A \tag{11}$$

9.5 *Resistance to Buckling*—The nominal resistance calculated using Eq 11 shall be investigated for buckling. If $f_c < f_y$, R_n shall be recalculated using f_c instead of f_y. The value of f_c shall be determined from Eq 5 or Eq 6 as applicable.

TABLE 4 Sectional Properties of Corrugated Aluminum Sheets for Corrugation: 3 by 1 in. [75 by 25 mm] (Helical or Annular)

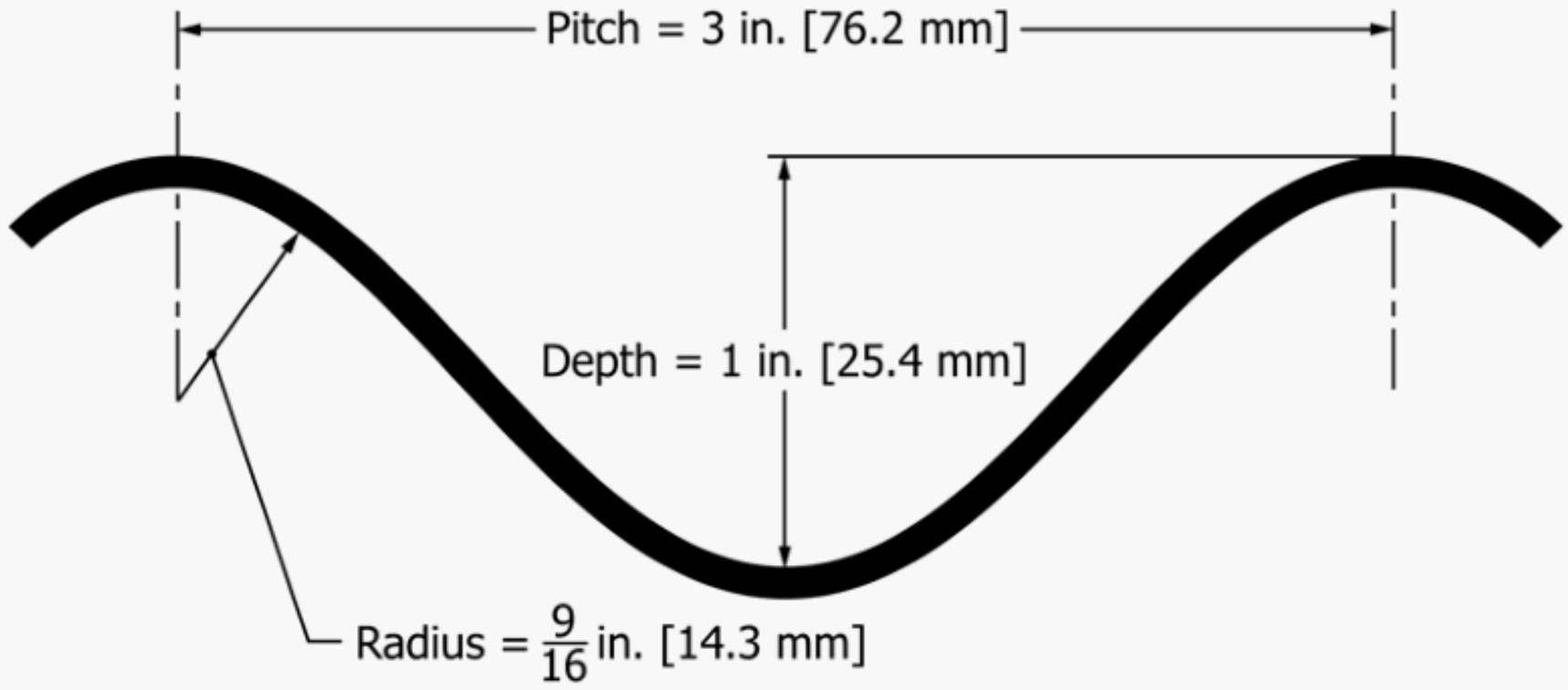

NOTE 1—Inch-pound dimensions shown in this figure are exact values used in calculating the section properties. Nominal values for some of these dimensions are used for other places in this practice.

Specified Thickness, in. [mm]	Area of Section *A*, in.^{2}/ft [mm^2/mm]	Moment of Inertia, $I \times 10^{-3}$, in.^{4}/in. [mm^4/mm]	Radius of Gyration, *r*, in. [mm]	Ultimate Longitudinal Seam Strength of Riveted Corrugated Aluminum Pipe, Pounds [kN] per Foot [metre] of Seam	
				⅜-in. [9.53 mm] Rivets	½-in. [12.70 mm] Rivets
				Double[A]	Double[A]
0.060 [1.52]	0.890 [1.884]	8.659 [141.90]	0.3417 [8.679]	16 500 [241]	...
0.075 [1.91]	1.118 [2.366]	10.883 [178.34]	0.3427 [8.705]	20 500 [299]	...
0.105 [2.67]	1.560 [3.302]	15.459 [253.33]	0.3448 [8.758]	...	28 000 [409]
0.135 [3.43]	2.008 [4.250]	20.183 [331.74]	0.3472 [8.819]	...	42 000 [613]
0.164 [4.17]	2.458 [5.203]	25.091 [411.17]	0.3499 [8.887]	...	54 500 [795]

[A] Double means two rows of rivets, one rivet per corrugation per row.

9.6 *Seam Resistance*—For pipe fabricated with longitudinal seams, the nominal resistance of the seam per unit length of wall, shall be taken as the ultimate seam strength shown in Tables 3 and 4, or Table 5.

10. Handling and Installation

10.1 The pipe shall have enough rigidity to withstand the forces that are normally applied during shipment and placing. Both shop- and field-assembled pipe shall have strength adequate to withstand compaction of the sidefill without interior bracing to maintain pipe shape. Handling and installation rigidity is measured by the following flexibility requirement:

$$FF = \frac{s^2}{EI} \tag{12}$$

10.2 For curve and tangent corrugated pipe, the flexibility factor shall not exceed the following:

Depth of Corrugation, in. [mm]	Flexibility Factor, *FF*, in./lbf [mm/N]	
	Material Thickness, in. [mm]	*FF*
¼ [6.5] and ½ [13]	0.060 [1.52]	0.031 [0.18]
	0.075 [1.91]	0.061 [0.35]
	all others	0.092 [0.53]
1 [25]	all	0.060 [0.34]
2½ [64] round pipe	all	0.025 [0.14]
2½ [64] arch and pipe arch	all	0.036 [0.21]

10.3 For ribbed pipes installed in a trench cut in undisturbed soil and provided with a soil envelope meeting the requirements of 17.2.3 to minimize compactive effort, the flexibility factor shall not exceed the following:

Depth of Rib, in. [mm]	Flexibility Factor, *FF*, in./lbf [mm/N]
¾ [19]	$0.600\ I^{1/3}$ [$0.135\ I^{1/3}$]
1 [25]	$0.310\ I^{1/3}$ [$0.070\ I^{1/3}$]

10.4 For ribbed pipes installed in a trench cut in undisturbed soil where the soil envelope does not meet the requirements of 17.2.3, the flexibility factor shall not exceed the following:

Depth of Rib, in. [mm]	Flexibility Factor, *FF*, in./lbf [mm/N]
¾ [19]	$0.420\ I^{1/3}$ [$0.0944\ I^{1/3}$]
1 [25]	$0.215\ I^{1/3}$ [$0.048\ I^{1/3}$]

10.5 For ribbed pipes installed in an embankment or fill section, the flexibility factor shall not exceed the following:

Depth of Rib, in. [mm]	Flexibility Factor, *FF*, in./lbf [mm/N]
¾ [19]	$0.340\ I^{1/3}$ [$0.0764\ I^{1/3}$]
1 [25]	$0.175\ I^{1/3}$ [$0.039\ I^{1/3}$]

11. Minimum Cover Requirements

11.1 *Minimum Cover Design*—Where pipes are to be placed under roads, streets, or freeways, the minimum cover requirement shall be determined. Minimum cover H_{min} is defined as the distance from the top of the pipe to the top of the rigid

TABLE 5 Sectional Properties of Corrugated Aluminum Plates for Corrugation: 9 by 2½ in. [230 by 64 mm]

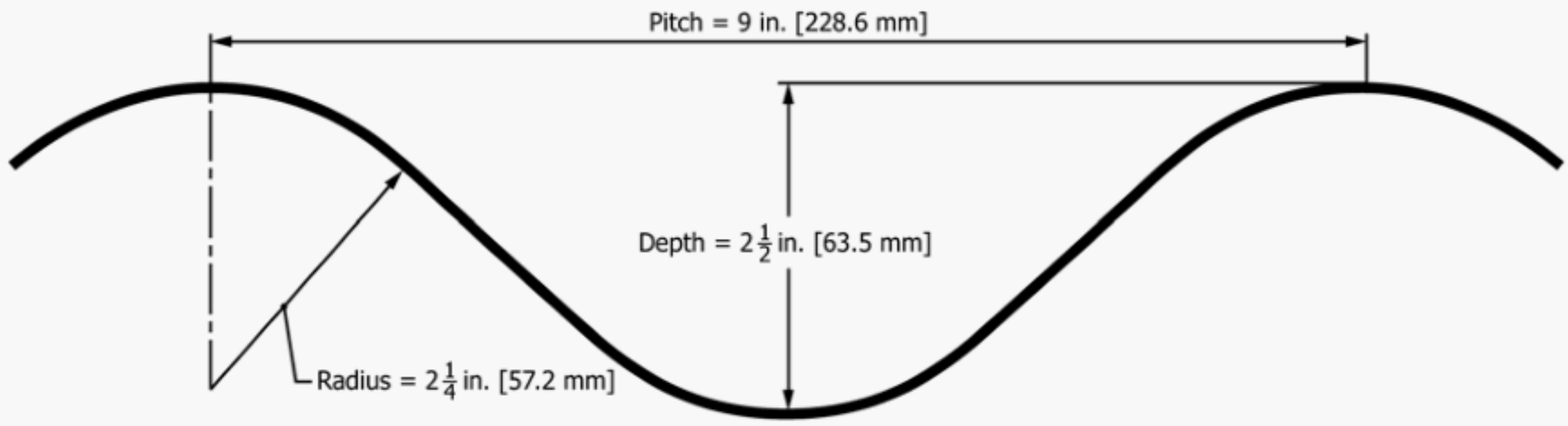

NOTE 1—Inch-pound dimensions shown in this figure are exact values used in calculating the section properties. Nominal values for some of these dimensions are used in other places in this practice.

NOTE 2—Refer to Specification B864/B864M for rib properties and capacities.

Specified Thickness, in. [mm]	Area of Section *A*, in.^{2}/ft [mm^2/mm]	Moment of Inertia, $I \times 10^{-3}$ in.^{4}/in. [mm^4/mm]	Radius of Gyration, *r*, in. [mm]	Ultimate Strength of Bolted Structural Plate Longitudinal Seams, Pounds [kN] per Foot [metre] of Seam (¾-in. [19 mm] Bolts)	
				Steel Bolts, 4 Bolts Per Corrugation[A]	Aluminum Bolts, 4 Bolts Per Corrugation
0.100 [2.54]	1.404 [2.972]	83.065 [1361.19]	0.844 [21.438]	28 000 [409]	26 400 [385]
0.125 [3.18]	1.750 [3.704]	103.901 [1702.63]	0.844 [21.438]	41 000 [598]	34 800 [508]
0.150 [3.81]	2.100 [4.445]	124.883 [2046.47]	0.845 [21.463]	54 100 [789]	44 400 [648]
0.175 [4.44]	2.449 [5.184]	145.845 [2389.97]	0.845 [21.463]	63 700 [930]	52 800 [771]
0.200 [5.08]	2.799 [5.925]	166.959 [2735.97]	0.846 [21.488]	73 400 [1071]	52 800 [771]
0.225 [5.72]	3.149 [6.665]	188.179 [3083.70]	0.847 [21.514]	83 200 [1214]	52 800 [771]
0.250 [6.35]	3.501 [7.410]	209.434 [3432.01]	0.847 [21.514]	93 100 [1359]	52 800 [771]

[A] Design values applicable to steel bolts and nut materials permitted by Specification B746/B746M, Table 2, or Table 3.

TABLE 6 Sectional Properties of Aluminum Spiral Rib Pipe for Rib ¾ in. [19 mm] Wide by ¾ in. [19 mm] Deep With a Spacing of 7½ in. [190 mm] Center to Center (Helical)

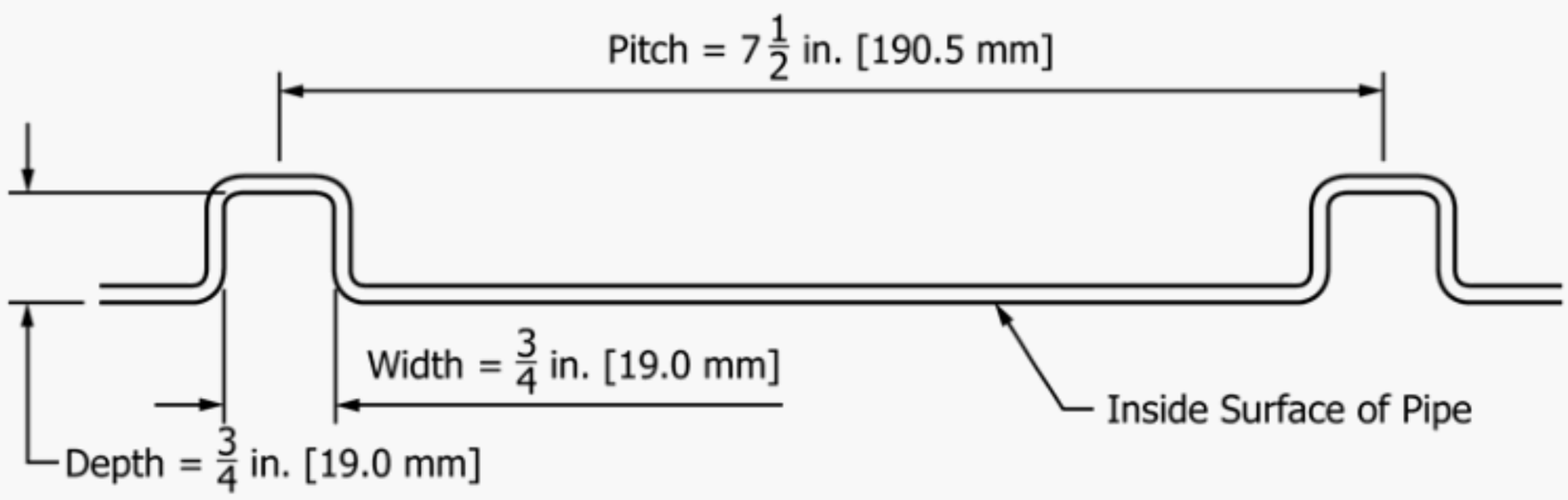

NOTE 1—Inch-pound dimensions shown in this figure are exact values used in calculating the section properties. Nominal values for some of these dimensions are used in other places in this practice.

NOTE 2—Net effective properties at full yield stress.

Effective Properties			
Specified Thickness, in. [mm]	Area of Section *A*, in.^{2}/ft. [mm^2/mm]	Moment of Inertia, $I \times 10^{-3}$ in.^{4}/in. [mm^4/mm]	Radius of Gyration, *r*, in. [mm]
0.060 [1.52]	0.415 [0.878]	2.558 [41.92]	0.272 [6.91]
0.075 [1.91]	0.569 [1.204]	3.372 [55.26]	0.267 [6.78]
0.105 [2.67]	0.914 [1.935]	5.073 [83.13]	0.258 [6.55]
0.135 [3.43]	1.290 [2.730]	6.826 [111.86]	0.252 [6.40]

pavement or to the top of the subgrade for flexible pavement. Maximum axle loads shall be consistent with the design vehicular live load.

11.1.1 When:

$$\sqrt{\frac{(AL)d}{EI}} > 0.23 \quad \text{or} < 0.45, \tag{13}$$

the minimum cover requirement is:

TABLE 7 Sectional Properties of Aluminum Spiral Rib Pipe for Rib ¾ in. [19 mm] Wide by 1 in. [25 mm] Deep With a Spacing of 11½ in. [292 mm] Center to Center (Helical)

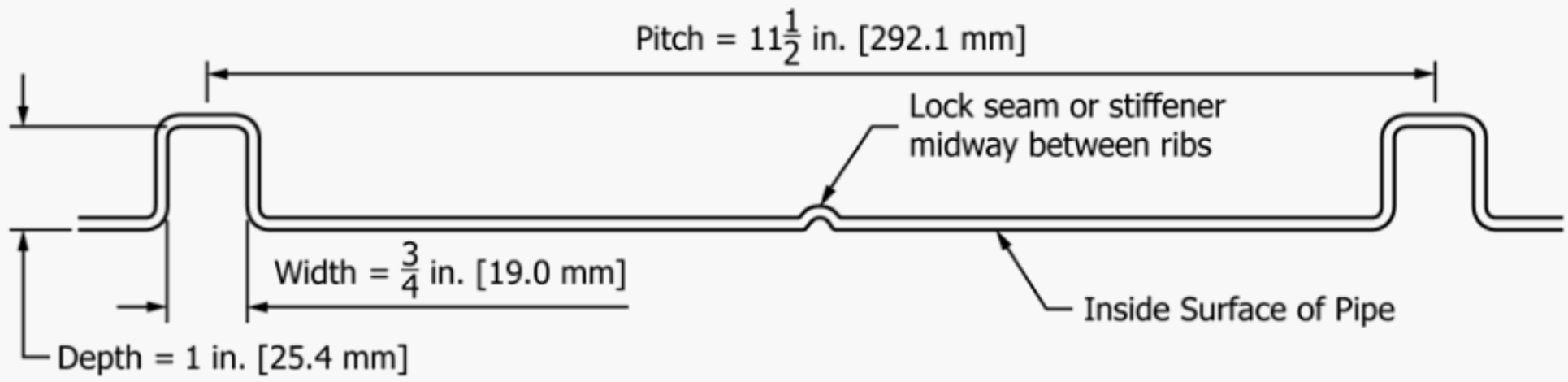

NOTE 1—Inch-pound dimensions shown in this figure are exact values used in calculating the section properties. Nominal values for some of these dimensions are used in other places in this practice.

NOTE 2—Net effective properties at full yield stress.

Effective Properties			
Specified Thickness, in. [mm]	Area of Section *A*, in.^{2}/ft. [mm^2/mm]	Moment of Inertia, $I \times 10^{-3}$ in.^{4}/in. [mm^4/mm]	Radius of Gyration, *r*, in. [mm]
0.060 [1.52]	0.312 [0.660]	4.080 [66.86]	0.396 [10.058]
0.075 [1.91]	0.427 [0.904]	5.450 [84.31]	0.391 [9.931]
0.105 [2.67]	0.697 [1.475]	8.390 [137.49]	0.380 [9.652]
0.135 [3.43]	1.009 [2.136]	11.480 [188.12]	0.369 [9.874]

TABLE 1 Sectional Properties of Corrugated Aluminum Sheets for Corrugation: 1½ by ¼ in. [38 by 6.5 mm] (Helical)

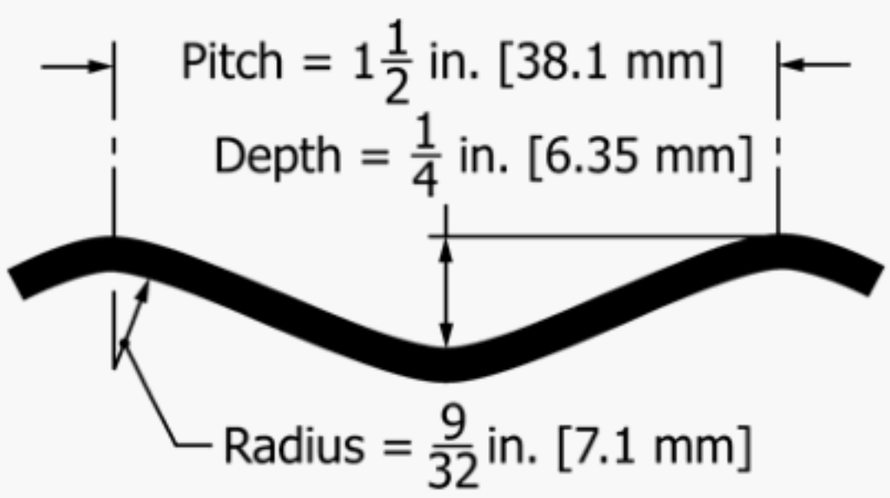

NOTE 1—Inch-pound dimensions shown in this figure are exact values used in calculating the section properties. Nominal values for some of these dimensions are used in other places in this practice.

Specified Thickness, in. [mm]	Area of Section *A*, in.^{2}/ft [mm^2/mm]	Moment of Inertia, $I \times 10^{-3}$ in.^{4}/in. [mm^4/mm]	Radius of Gyration, *r*, in. [mm]
0.048 [1.22]	0.608 [1.287]	0.344 [5.64]	0.0824 [2.093]
0.060 [1.52]	0.761 [1.611]	0.439 [7.19]	0.0832 [2.113]

$$H_{min} = 0.55S \sqrt{\frac{(AL)d}{EI}} \quad (14)$$

11.1.2 When:

$$\sqrt{\frac{(AL)d}{EI}} < 0.23 \quad \text{then} \quad H_{min} = \frac{S}{8} \quad (15)$$

11.1.3 When:

$$\sqrt{\frac{(AL)d}{EI}} > 0.45 \quad \text{then} \quad H_{min} = \frac{S}{4} \quad (16)$$

In all cases, H_{min} is never less than 1 ft [300 mm].

TABLE 8 Resistance Factors for LRFD Design

Type of Pipe	Limit State	Resistance Factor, φ
Helical pipe with lock seam or fully welded seam	Minimum wall area and buckling	1.00
Annular pipe with spot-welded, riveted, or bolted seam	Minimum wall area and buckling	1.00
	Minimum seam strength	0.67
Structural plate pipe	Minimum wall area and buckling	1.00
	Minimum seam strength	0.67

11.2 *Minimum Cover Under Railways*—Where pipes are to be placed under railways, the minimum cover (measured from the top of the pipe to the bottom of the crossties) shall not be less than one fourth of the span for factory-made pipe, or one fifth of the span for field-bolted pipe. In all cases, the minimum cover is never less than 1 ft [300 mm] for roundpipe, or 2 ft [600 mm] for arches and pipe-arches.

11.3 *Minimum Cover Under Aircraft Runways*—Where pipes are to be placed under rigid-pavement runways, the minimum cover is 1.5 ft [450 mm] from the top of the pipe to the bottom of the slab, regardless of the type of pipe or the loading. For pipes under flexible-pavement runways, the minimum cover must be determined for the specific pipe and loadings that are to be considered; see the FAA, "Airport Drainage."

11.4 *Construction Loads*—It is important to protect drainage structures during construction. Heavy construction equipment shall not be allowed close to or on buried pipe unless provisions are made to accommodate the loads imposed by such equipment. A minimum cover of 4 ft [1200 mm] is suggested; however, this may be modified depending on field conditions and by experience.

12. Deflection

12.1 The application of a deflection design criteria is optional. Long-term field experience and test results have demonstrated that corrugated aluminum pipe, properly installed using suitable fill material, will experience no significant deflection. Some designers, however, continue to apply a deflection limit.

13. Smooth-Line Pipe

13.1 Corrugated aluminum pipe composed of a smooth interior aluminum liner and a corrugated exterior shell that are attached integrally at the continuous helical lockseam, shall be designed in accordance with this practice on the same basis as a standard corrugated aluminum pipe having the same corrugation as the shell and a weight per foot [metre] equal to the sum of the weights of the liner and the shell. The corrugated shell shall be limited to corrugations having a maximum pitch of 3 in. [75 mm], and a thickness of not less than 60 % of the total thickness of the equivalent standard pipe. The distance between parallel helical seams, when measured along the longitudinal axis of the pipe, shall be no greater than 30 in. [750 mm].

14. Spiral-Rib Pipe

14.1 Pipe composed of a single thickness of smooth sheet with helical ribs projecting outwardly shall be designed on the same basis as a standard corrugated aluminum pipe.

15. Pipe-Arch Design

15.1 Pipe-arch and underpass design shall be similar to round pipe using twice the top radius as the span *S*.

16. Materials

16.1 Acceptable pipe materials, methods of manufacture, and quality of finished pipe are described in Specifications B745/B745M and B746/B746M. If required, acceptable reinforcing ribs are described in Specification B864/B864M.

17. Soil Design

17.1 The performance of a flexible corrugated aluminum pipe is dependent on soil-structure interaction and soil stiffness.

17.2 *Soil Parameters to be Considered:*

17.2.1 The type and anticipated behavior of the foundation soil under the design load must be considered.

17.2.2 The type, compacted density, and strength properties of the soil envelope immediately adjacent to the pipe shall be established. Good sidefill material is considered to be a granular material with little or no plasticity and free of organic material. Soils meeting the requirements of Groups GM and GC as described in Classification D2487 are generally acceptable, when compacted to 90 % of maximum density as determined by Test Method D698. Soils meeting the requirements of Groups GW, GP, SW, and SP as described in Classification D2487 are generally acceptable, when compacted to 95 % of maximum density as determined by Test Method D698. Test Methods D1556, D2167, D6938, and D2937 may be used to determine the in-place density of the soil. Soil Groups SM and SC are acceptable but may require closer control to obtain the specified density.

17.2.3 Ribbed pipe covered by 10.3 shall have soil envelope of clean, nonplastic materials meeting the requirements of Groups GP and SP in accordance with the classification of Classification D2487, or well-graded granular materials meeting the requirements of Groups GW, SW, GM, SM, GC, or SC, in accordance with the classification of Classification D2487, with a maximum plasticity index (PI) of 10. All envelope materials shall be compacted to a minimum 90 % of standard density in accordance with Test Method D698. Maximum loose lift thickness shall be 8 in. [200 mm].

NOTE 2—Soil cement or cement slurries may be used instead of the select granular materials.

17.2.4 The size of the structural soil envelope shall be 2 ft [600 mm] minimum each side for trench installations and one diameter minimum each side for embankment installations. This structural soil envelope shall extend at least 1 ft [300 mm] above the top of the pipe.

17.3 *Pipe-Arch Soil-Bearing Design*—The pipe-arch shape causes the soil pressure at the corner to be very high compared to the soil pressure across the top of the pipe-arch. The bearing capacity of the soil at the pipe-arch corner usually limits the maximum depth of fill over a pipe-arch. Determine the maximum height of fill as follows:

$$H_{max} = \frac{66.7 r_c}{S} \quad (\text{for 2 tons/ft}^2 \text{ of soil bearing pressure}) \qquad (17)$$

$$H_{max} = \frac{20.3 r_c}{S} \quad (\text{for 190 kPa of soil bearing pressure}) \qquad (18)$$

Bedding and backfill material at the corner of pipe-arches placed on a stable foundation shall have an allowable bearing pressure of 2 tons/ft^2 [190 kPa]. Corner pressures in excess of 2 tons/ft^2 [190 kPa] require a special design.

18. Minimum Spacing

18.1 When multiple lines of pipes or pipe-arches greater than 48 in. [1200 mm] in diameter or span are used, they shall be spaced so that the sides of the pipe shall be no closer than one half of a diameter or 3 ft [900 mm], whichever is less, so that sufficient space for adequate compaction of the fill material is available. For diameters up to 48 in. [1200 mm], the minimum distance between the sides of the pipes shall be no less than 2 ft [600 mm].

18.2 Materials such as various foamed or cementitious materials that set up without mechanical compaction, may be placed between structures with as little as 6 in. [150 mm] of clearance.

19. End Treatment

19.1 Protection of end slopes shall require special consideration where backwater conditions may occur or where erosion and uplift could be a problem.

19.2 End walls designed on a skewed alignment require special design.

20. Abrasive or Corrosive Conditions

20.1 Extra aluminum thickness or coatings may be required for resistance to corrosion or abrasion, or both. For highly abrasive conditions, special designs may be required.

21. Construction and Installation

21.1 The construction and installation of corrugated aluminum pipe and pipe-arches and aluminum structural plate pipe, pipe-arches, and arches shall conform to Practices B788/B788M and B789/B789M.

22. Structural Plate Arches

22.1 Structural design calculations for structural plate arches shall be the same as those for structural plate pipe, except when the rise to span ratio is less than 0.3. If the rise to span ratio is less than 0.3 a special design is required.

22.2 *Footing Design:*

22.2.1 The load transmitted to the footing is considered to act tangential to the aluminum plate at its point of connection to the footing. The load is equal to the thrust in the aluminum arch plate.

22.2.2 The footing shall be designed to provide for settlement of an acceptable magnitude uniformly along the longitudinal axis. Providing for the arch to settle will protect it from possible overload forces induced by the settling of adjacent embankment fill.

22.2.3 Where poor materials are encountered that might settle excessively, some of this poor material shall be removed and replaced with acceptable material.

22.2.4 It is undesirable to make the aluminum arch relatively unyielding or fixed compared to the adjacent sidefill. The use of massive footings or piles to prevent settlement of the arch is generally not required, or is it desired.

22.2.5 Invert slabs or other appropriate methods should be provided when scour is anticipated.

23. Keywords

23.1 aluminum culvert; aluminum storm drains; structural design; culvert pipe; structural plate; storm drains

ASTM International takes no position respecting the validity of any patent rights asserted in connection with any item mentioned in this standard. Users of this standard are expressly advised that determination of the validity of any such patent rights, and the risk of infringement of such rights, are entirely their own responsibility.

This standard is subject to revision at any time by the responsible technical committee and must be reviewed every five years and if not revised, either reapproved or withdrawn. Your comments are invited either for revision of this standard or for additional standards and should be addressed to ASTM International Headquarters. Your comments will receive careful consideration at a meeting of the responsible technical committee, which you may attend. If you feel that your comments have not received a fair hearing you should make your views known to the ASTM Committee on Standards, at the address shown below.

This standard is copyrighted by ASTM International, 100 Barr Harbor Drive, PO Box C700, West Conshohocken, PA 19428-2959, United States. Individual reprints (single or multiple copies) of this standard may be obtained by contacting ASTM at the above address or at 610-832-9585 (phone), 610-832-9555 (fax), or service@astm.org (e-mail); or through the ASTM website (www.astm.org). Permission rights to photocopy the standard may also be secured from the Copyright Clearance Center, 222 Rosewood Drive, Danvers, MA 01923, Tel: (978) 646-2600; http://www.copyright.com/