This international standard was developed in accordance with internationally recognized principles on standardization established in the Decision on Principles for the Development of International Standards, Guides and Recommendations issued by the World Trade Organization Technical Barriers to Trade (TBT) Committee.

Designation: C1471/C1471M – 05 (Reapproved 2021)

Standard Guide for the Use of High Solids Content Cold Liquid-Applied Elastomeric Waterproofing Membrane on Vertical Surfaces[1]

This standard is issued under the fixed designation C1471/C1471M; the number immediately following the designation indicates the year of original adoption or, in the case of revision, the year of last revision. A number in parentheses indicates the year of last reapproval. A superscript epsilon (ε) indicates an editorial change since the last revision or reapproval.

1. Scope

1.1 This guide describes the use of a high solids content, cold liquid-applied elastomeric waterproofing membrane that meets the performance criteria specified in Specification C836/C836M, subject to intermittent hydrostatic pressure in a waterproofing system intended for installation on vertical cast-in-place concrete surfaces.

1.2 The committee with jurisdiction over this standard is not aware of any comparable standards published by other organizations.

1.3 The values stated in either SI units or inch-pound units are to be regarded separately as standard. The values stated in each system may not be exact equivalents; therefore, each system shall be used independently of the other. Combining values from the two systems may result in nonconformance with the standard.

1.4 *This standard does not purport to address all of the safety concerns, if any, associated with its use. It is the responsibility of the user of this standard to establish appropriate safety, health, and environmental practices and determine the applicability of regulatory limitations prior to use.*

1.5 *This international standard was developed in accordance with internationally recognized principles on standardization established in the Decision on Principles for the Development of International Standards, Guides and Recommendations issued by the World Trade Organization Technical Barriers to Trade (TBT) Committee.*

2. Referenced Documents

2.1 *ASTM Standards:*[2]

C117 Test Method for Materials Finer than 75-µm (No. 200) Sieve in Mineral Aggregates by Washing

C717 Terminology of Building Seals and Sealants

C836/C836M Specification for High Solids Content, Cold Liquid-Applied Elastomeric Waterproofing Membrane for Use with Separate Wearing Course

C898/C898M Guide for Use of High Solids Content, Cold Liquid-Applied Elastomeric Waterproofing Membrane with Separate Wearing Course

D4263 Test Method for Indicating Moisture in Concrete by the Plastic Sheet Method

3. Terminology

3.1 *Definitions*—Refer to Terminology C717 for definitions of terms used in this standard.

3.2 *Definitions of Terms Specific to This Standard:*

3.2.1 *drainage composite*—geocomposite consisting of a geotextile filter fabric and a drainage core of various thicknesses and shapes.

4. Significance and Use

4.1 This grade provides considerations for the design and installation of liquid-applied waterproofing systems. The intent is to provide information and guidelines for consideration by designers. Typical uses for these systems include, among others, planters and foundation walls with drainage systems.

4.2 This guide is intended to be considered in conjunction with Guide C898/C898M to provide total system guidelines.

5. Comparison to Other Standards

5.1 The committee with jurisdiction over this standard is not aware of any comparable standards published by other organizations.

6. General

6.1 *General*—The major components to be considered for a below-grade building wall waterproofing system are the structural wall or substrate to be waterproofed, waterproofing membrane, membrane protection, drainage, and backfill. Additional components to be considered are membrane terminations, penetrations, joints, and thermal insulation.

6.2 *Compatibility*—It is essential that all components and contiguous elements be compatible, and that they be coordinated to form an integrated waterproofing system.

[1] This guide is under the jurisdiction of ASTM Committee D08 on Roofing and Waterproofing and is the direct responsibility of Subcommittee D08.22 on Waterproofing and Dampproofing Systems.

Current edition approved Dec. 1, 2021. Published December 2021. Originally approved in 2000. Last previous edition approved in 2014 as C1471/C1471M – 05 (2014)$^{\varepsilon 1}$. DOI: 10.1520/C1471_C1471M-05R21.

[2] For referenced ASTM standards, visit the ASTM website, www.astm.org, or contact ASTM Customer Service at service@astm.org. For *Annual Book of ASTM Standards* volume information, refer to the standard's Document Summary page on the ASTM website.

Copyright © ASTM International, 100 Barr Harbor Drive, PO Box C700, West Conshohocken, PA 19428-2959. United States

6.3 *Continuity*—It is essential that the waterproofing membrane, including all joints and transitions, is continuous. Special attention must be paid to changes in plane, transitions from one substrate to another, terminations, and abutting waterproofing systems. Expansion and control joints in abutting vertical and horizontal surfaces must maintain the continuity of the system. It is recommended that, during system development and documentation, isometric drawings be made of three-dimensional connections and transitions.

7. Substrate

7.1 *General*—The building wall substrate referred to in this guide is reinforced, cast-in-place concrete.

7.2 *Strength*—The strength of concrete is a factor to be considered with respect to liquid-applied membranes so far as it relates to surface finish, bond strength, and continuing integrity (absence of cracks and other concrete defects that could affect the integrity of the membrane).

7.3 *Density and Moisture Content*—The density and moisture content of concrete when cured are interrelated. Excessively high moisture content can affect adhesion of the membrane to a substrate, as moisture may condense at the membrane-to-concrete interface and cause membrane delamination. Lower moisture contents are achieved with the use of hard, dense stone aggregate. This type of coarse aggregate will generally provide structural concrete with moisture content from 3 to 5 % when cured. The concrete substrate should have a minimum density of 2100 kg/m^3 [130 lb/ft^3] and a maximum moisture content of 8 % when cured.

7.4 *Admixtures*—Polymeric, latex, or other organic chemical based admixtures or modifiers can coat the concrete particles and reduce the adhesion of the membrane to the substrate. If the concrete substrate will contain any admixtures, the membrane manufacturer should be consulted and should approve the use of the membrane with the specific proposed admixtures.

7.5 *Release and Curing Agents*—Form release agents and form oils are often used to facilitate the removal of the concrete form work, and curing agents are sometimes applied to the green (uncured) concrete surface. These chemicals can reduce the adhesion of the membrane to the concrete, and their use should be coordinated with and be accepted by the membrane manufacturer. Form oils should not be used on areas to receive waterproofing. If form oils were used, sandblasting or other approved methods must be used to remove the form oils prior to waterproofing application.

7.6 *Finish*—The structural wall should have a smooth form finish. The surface should provide a mechanical bond for the membrane but not be so rough as to preclude achieving continuity of the membrane and the specified membrane thickness across its surface. All fins, projections, tie rod holes, and honeycomb must be repaired. The removal of fins and similar projections is especially critical, because they cause thin spots in the membrane that are easily punctured. The concrete surface at the top of the wall and at the footing should be of the same quality as the face of the wall. The footing should be troweled smooth and be free of fins, burrs, and large irregularities. A minimum width of 200 mm, with 300 mm preferred, should be available on the footing to effectively terminate the waterproofing membrane. The top of the footing should be sloped away from the wall.

7.7 *Dryness*—Membrane manufacturers' requirements for substrate dryness vary and can include being visibly dry, passing a 4-h glass test, passing Test Method D4263 with no condensate, or having a specific maximum moisture content as measured by a moisture meter. Refer to and meet the manufacturer's requirements for the particular membrane being applied. It is recommended that the membrane not be applied sooner than 28 days after concrete placement.

7.8 *Joints*—Joints in structural concrete walls are referred to in this guide as reinforced joints, unreinforced joints, and expansion joints.

7.8.1 *Reinforced Joints*—Reinforced joints consist of hairline cracks, cold joints, construction joints, or control joints held together with steel reinforcing bars or wire fabric. These are considered static joints with little or no anticipated movement because the reinforcement is continuous across the joint.

7.8.2 *Unreinforced Joints*—Unreinforced joints consist of butted construction joints and isolation joints not held together with steel reinforcing bars or wire fabric. These joints are generally considered as non-moving or static joints. However, they should be considered as capable of some movement, the magnitude of which is difficult to predict.

7.8.3 *Expansion Joints*—Expansion joints are designed to accommodate a predetermined amount of movement. Such movement can be due to thermal change, shrinkage, creep, deflection, or other factors. In detailing watertight expansion joints, the amount of movement must be determined using a reasonable factor of safety since accurate prediction of the magnitude of movement is difficult. The size and configuration of the joint should then be related to the capability of the membrane and joint seal materials to accommodate the anticipated movement.

8. Waterproofing Membrane

8.1 *General*—Application of the membrane may be by brush, trowel, roller, or spray equipment, or combinations thereof, depending on the manufacturer's recommended or required procedures and the job site conditions. A two-coat application is preferable to a single-coat application, because it provides some redundancy and it is easier to meet or exceed the minimum required membrane thickness. It also reduces the tendency for membrane material to slide or sag, and pinholes in the first coat can be covered by the second coat.

8.1.1 One-part membrane materials should be stirred thoroughly prior to application With two-part materials, stir each component separately before combining. Thoroughly mix the two components together so the curing agent is uniformly dispersed in the base component, ensuring even curing of the membrane. Mixing should be at a slow speed, 80 to 150 rpm, to avoid entrapping air in the material. The bottom and sides of the container should be scraped with a square-edged spatula during mixing.

8.1.2 Some materials require the use of a primer on some substrates. Review the manufacturer's requirements and use the recommended primer where necessary.

8.1.3 A coverage rate of 1.5 L/m^2 [4 gal/100 ft^2] of surface area on a smooth substrate yields a dry-film thickness of 1.5 ± 0.1 mm [60 ± 5 mils] using materials that are 100 % solids. The products described by this guide are marketed by a number of manufacturers and may have different minimum required membrane thicknesses. This guide is predicated upon a minimum dry-film thickness of 1.5 ± 0.1 mm. When the solids content of the waterproofing membrane is less than 100 %, the coverage rate required to achieve a 1.5 mm dry-film thickness is calculated by the following formula:

$$\frac{1.5\ L/m^2}{\%\ solids\ by\ volume\ (expressed\ as\ a\ decimal)} = L/m^2 \qquad (1)$$

The manufacturer's data sheets should be consulted for the yield of the proposed product.

8.1.4 The application thickness should be monitored closely to ensure that the membrane is applied at the specified wet-film thickness. The application thickness should be checked while the film is still liquid with a wet-film thickness gauge or other appropriate means. Two to three checks per 10 m^2 [100 ft^2] should be performed. Irregular substrates should be monitored more closely and require heavier average application to maintain the specified minimum membrane thickness. Damage to the membrane caused by the depth gauge must be repaired before the membrane cures.

8.1.5 The cured membrane should be carefully inspected for voids and thin spots. The membrane thickness should be specified as the minimum allowable thickness at any point, not as an average thickness. All defects should be repaired according to the manufacturer's recommendations prior to placement of the protection course.

8.2 *Adhesion to Substrate*—A liquid-applied waterproofing membrane must adhere to the substrate in order to stay in place prior to backfilling and to prevent water accumulation and movement between the membrane and the substrate. Water penetrating an unbonded membrane could migrate laterally under the membrane until reaching a crack or defect in the structural wall and then leak through to the interior. Leakage through the wall would not necessarily indicate the location of water entry through the membrane. That point could be a considerable distance away, and removal of large areas of backfill might be required before it is located.

8.2.1 The substrate must be dry and frost-free on the surface and throughout the depth of the concrete when the membrane is applied. Excessive moisture in the substrate or moisture on the surface from frost, rain, or condensation may cause an improper cure, formation of gas pockets, or little or no adhesion to the substrate. Should rain or snow interrupt the application after at least one coat of material has been applied, the manufacturer's instructions should be followed pertaining to treatment of the cured material prior to continuing application.

8.3 *Terminations*—The waterproofing system should terminate a minimum of 150 mm [6 in.] above the finish grade or brick ledge. Where a concrete wall is to be exposed above grade, the waterproofing may be terminated no more than 50 mm [2 in.] below grade. It should be recognized that the area above the termination is vulnerable to water penetration through cracks or joints and these areas must be addressed.

8.3.1 The waterproofing system should terminate a minimum of 300 mm [12 in.] below the lower floor line or on top of the footing a minimum of 150 mm [6 in.] out from the wall face. The system should never be terminated above the drainage collection level. See Fig. 1.

8.3.2 The waterproofing system should terminate a minimum of 600 mm [24 in.] onto intersecting walls, columns, or counterforts. Under certain conditions, such as the intersection of a retaining wall with the main foundation wall, it is desirable to provide continuous wall waterproofing prior to the placement of the intersecting wall.

8.3.3 The waterproofing system on vertical walls should connect with below-slab waterproofing when used. When the two membranes are the same material or compatible materials, they may lap each other. This may be accomplished by applying the membrane to the top of the footing prior to pouring the concrete wall (Fig. 1). When the two membranes do not connect but are separated by the wall, care must be taken to ensure that the footing and wall are watertight. Concrete additives are sometimes used for this purpose.

8.3.4 Where the membrane connects with a horizontal plaza, the transition should be carefully evaluated and designed. Compatibility between membrane systems will be ensured if the same material is used for both the vertical and horizontal surfaces. If different systems are used, it is important that they be compatible. The manufacturers of both systems should accept the specific membrane materials and details that will be used. Expansion joints should be continuous from horizontal to vertical surfaces and have similar treatments.

8.3.5 Interior corners, both horizontal and vertical, should receive a fillet bead of compatible sealant or other material or

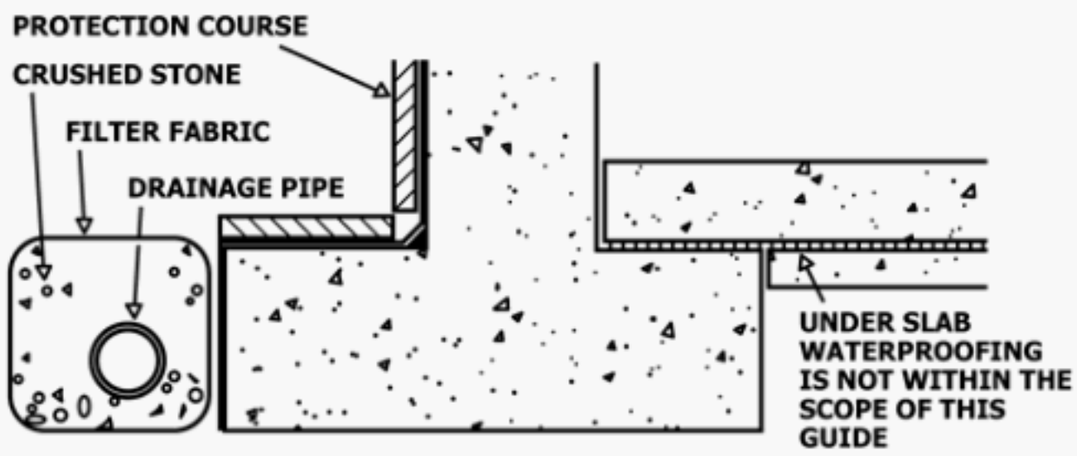

FIG. 1 Footing

a double layer of membrane material extending approximately 150 mm [6 in.] on both sides of the corner. Exterior corners should receive a double layer of membrane material. Exterior corners should have a 20 to 25 mm [¾ to 1 in.] chamfer. See Fig. 2.

8.4 *Penetrations*—Utility lines such as sewer, water, gas, or electric pipes and conduits penetrate foundation walls and interrupt the continuity of the waterproofing membrane. This is an area of potential water leakage that requires careful design and detailing. The penetration should be sized to allow for differential horizontal and vertical movement between the utility and the wall and for longitudinal movement of the utility. The preferred detail includes a sleeve cast in the concrete wall. The sleeve should have an inside diameter at least 40 mm [1½ in.] larger than the outside diameter of the utility to allow for proper sealing of the utility to the inside of the sleeve, usually performed by the utility installer. The sleeve should extend at least 150 mm [6 in.] from the wall to allow for a watertight termination of the membrane to the sleeve. Protection board wrapped around the sleeve should be secured with a clamping band. See Fig. 3. This detail allows the utility to be replaced and resealed to the inside of the sleeve without disturbing the waterproofing membrane. It is not uncommon for some utilities to be replaced several times during the service life of the waterproofing membrane. It is advisable to test the adhesion of the membrane to the pipe prior to installation. Contact the membrane manufacturer for advice if adhesion is not acceptable.

8.5 *Joints:*

8.5.1 *Reinforced Joints*—Fig. 4 depicts two treatments of a reinforced concrete joint in a structural wall. The designer should realize that the elongation capacity of this type of detail is quite limited and relies on the membrane's crack-bridging ability to withstand the strains imposed by the opening of cracks and reinforced joints. An alternative approach is to prevent the membrane from adhering to the substrate for a finite width centered on the joint or crack by using a bond breaker tape. The width of the bond breaker depends on the crack-bridging ability of the membrane, but a minimum of a 15 mm [⅝ in.] lap on both sides of the crack or joint is recommended.

8.5.2 *Unreinforced Joints*—Unreinforced joints that are in reality non-moving may be treated in the same manner as reinforced joints. However, since the joints are not held together with reinforcing steel, some movement, however slight, should be anticipated and provided for, since the liquid-applied membrane has limited ability to accommodate movement. Unreinforced joints could open due to shrinkage, creep, or thermal movement. Fig. 5 shows an unreinforced butt joint that is capable of expanding 3 mm [⅛ in.], the minimum that should be provided for when using a sealant capable of ±25 % movement. The minimum sealant width should be correspondingly wider with a sealant having less movement capability. If the designer of the structural system feels that movement greater than 3 mm is expected, the joint should be treated as an expansion joint.

8.5.3 *Expansion Joints*—Two basic design concepts should be considered in the detailing of expansion joints in membrane waterproofing systems. The designer may choose to use either a prefabricated compatible sheet of elastomeric material or a wet-applied joint sealant. The membrane manufacturer's data sheets should be consulted for the recommended type, size, shape, and material.

9. Protection Course

9.1 The protection course is applied to the waterproofing membrane after placement of the membrane. It protects the membrane from damage due to construction operations such as backfilling and from the compressive and shear forces imposed by backfill. Proper timing of the application of the protection course after placement of the membrane is important and varies with the type of membrane. The release of volatiles from the membrane is inhibited by some protection course materials and thus prevents or slows proper membrane cure. Some protection course materials are adversely affected by the volatiles in some membranes. The manufacturer's instructions should be followed.

9.2 Certain physical characteristics of the protection course should be considered in the choice of products for use with membrane waterproofing.

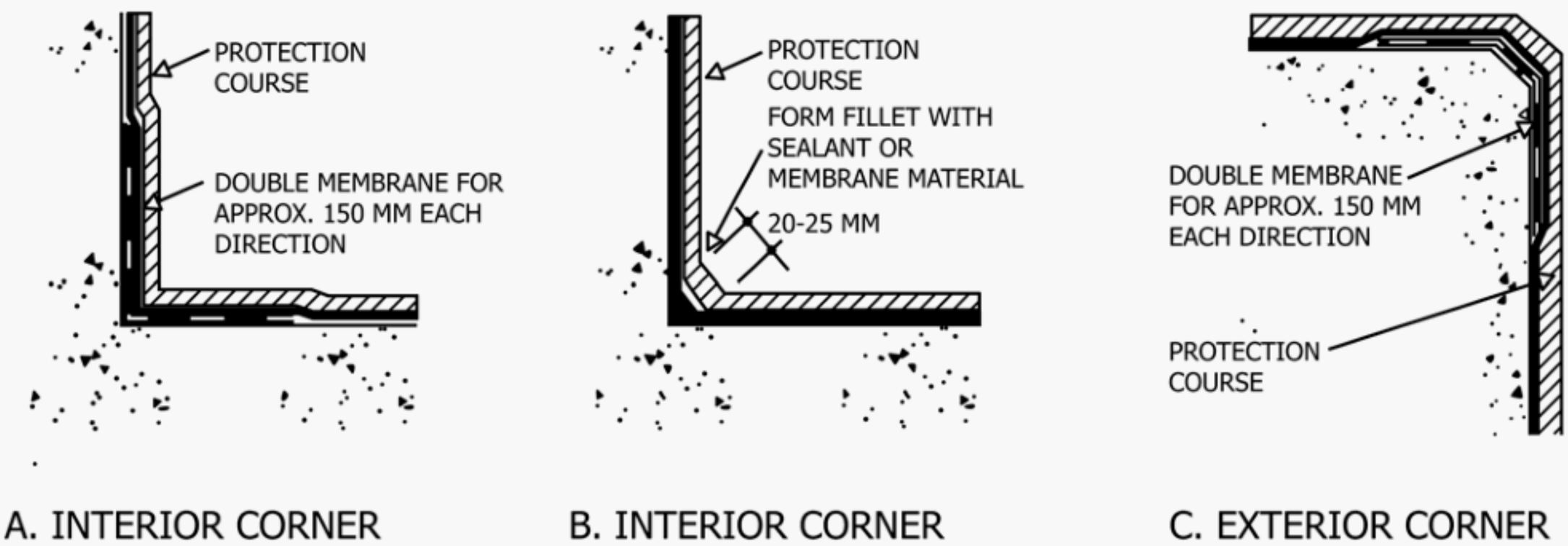

FIG. 2 Treatment at Vertical Corners

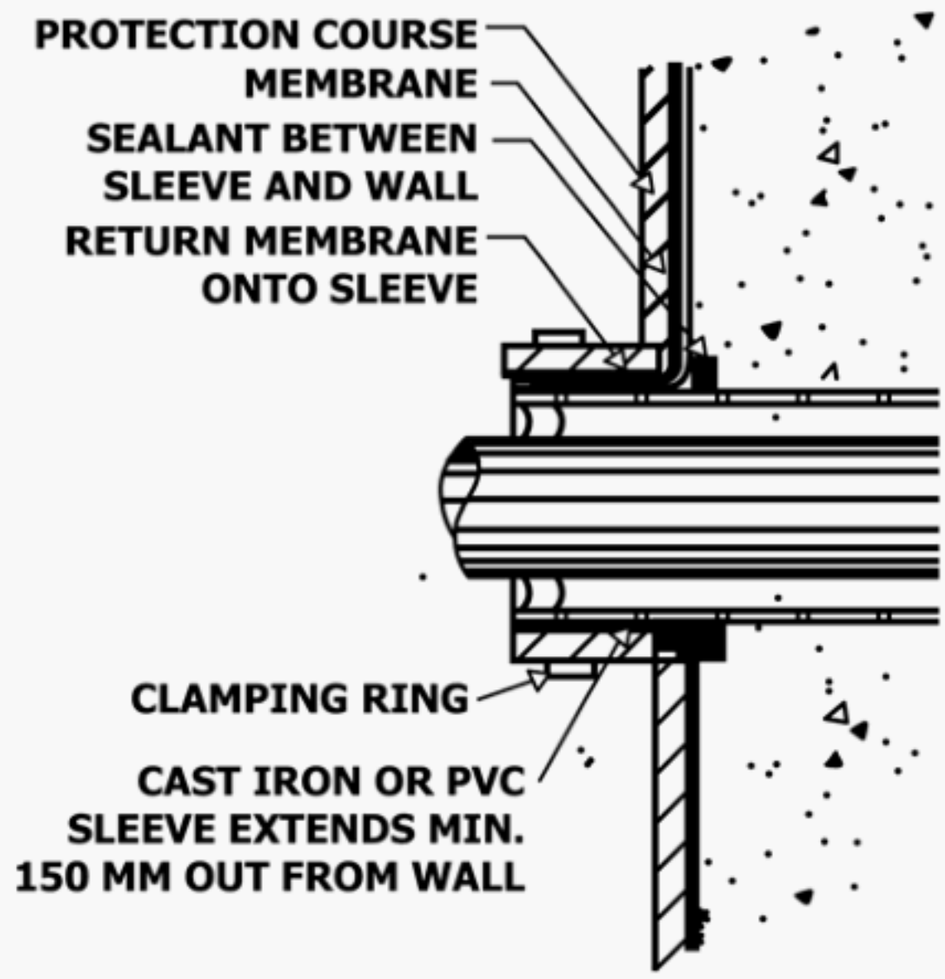

FIG. 3 Pipe Penetration

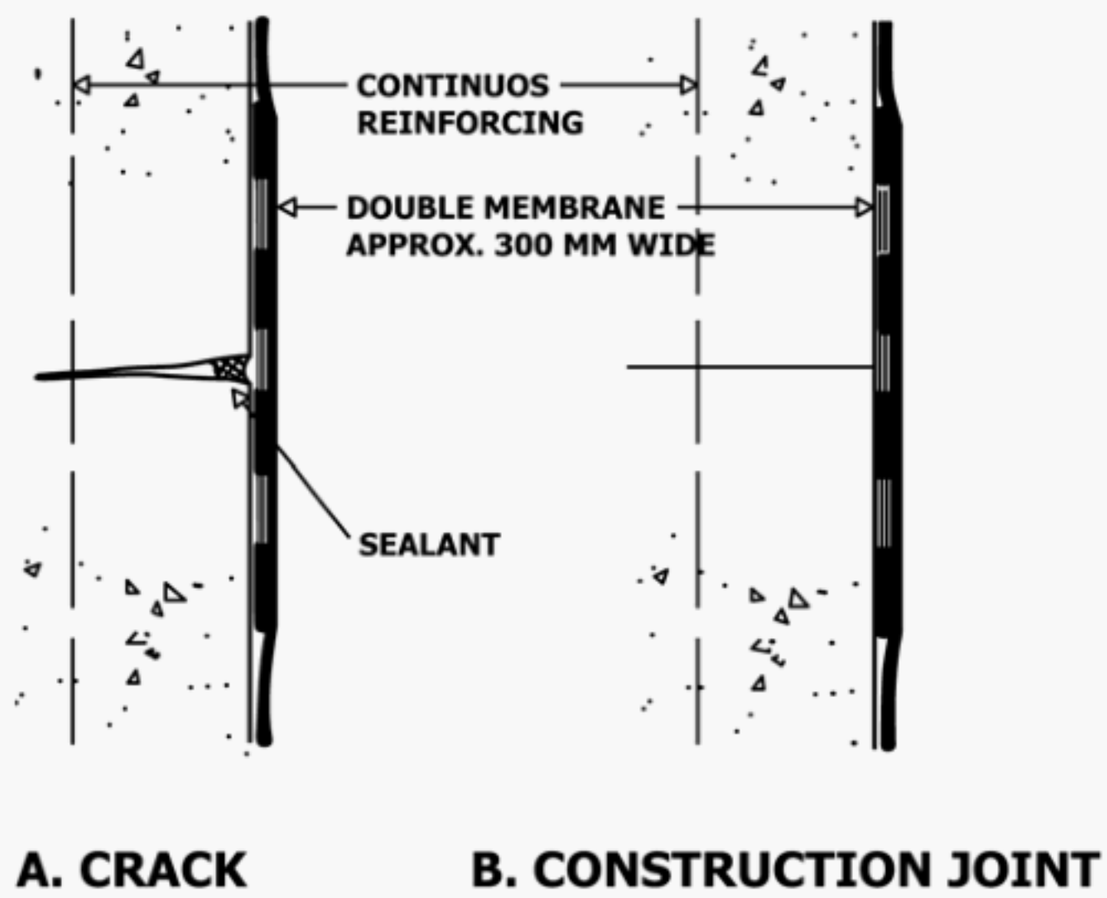

FIG. 4 Reinforced Joints

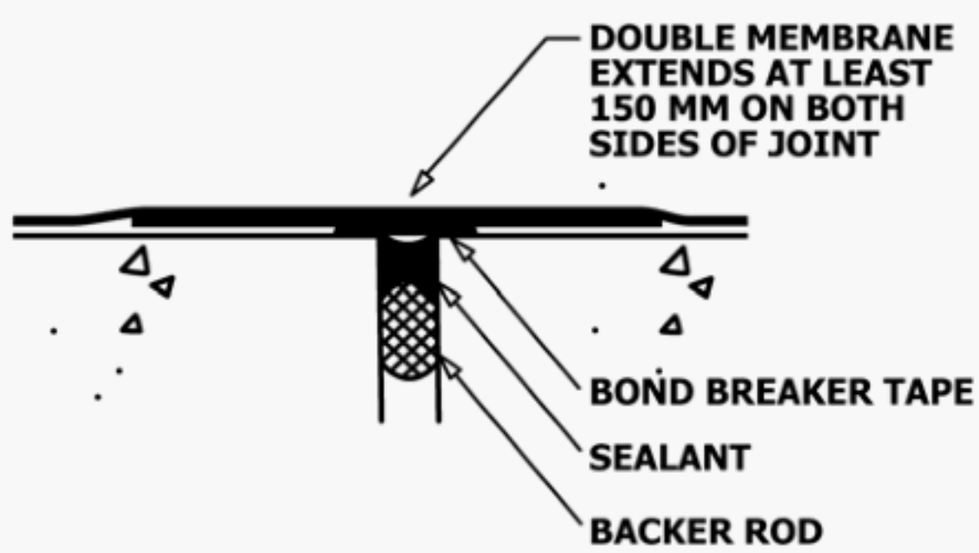

FIG. 5 Unreinforced Joint

9.2.1 *Impact Resistance*—The protection course must withstand the impact and abrasion of the backfill materials during placement and compaction and from movement due to settlement and frost.

9.2.2 *Compatibility*—The protection course must be compatible with the membrane and contain nothing that can degrade the membrane or interrupt the membrane cure. The protection course must also not be degraded by the membrane.

The membrane manufacturer should specifically approve the protection course for use.

9.3 *Ancillary Provisions*—While the primary purpose of the protection course is to protect the waterproofing membrane during construction, many products are marketed which can combine added design features to the primary protection purpose. Some products may afford longer service or provide insulation or drainage. Evaluate the cost of each product versus its overall benefit.

9.3.1 *Insulation*—Certain insulation products can be used as protection boards in membrane systems on foundation walls, including molded polystyrene, extruded polystyrene, glass fiber boards, and other types of conventional insulation. The thermal value of all insulation is degraded by absorbed moisture. Some types are affected much more than others. The water absorption of thermal insulation that is listed in most manufacturer's literature is a 24-h ASTM test, and with a few exceptions, the long-term absorption of below-grade insulation is significantly higher than the 24-h absorption. Only insulation products which can function under the impact, abrasion, and immersion conditions to which they will be exposed should be used.

9.3.2 *Drainage Composites*—Geocomposites provide both protection and drainage, and some also provide thermal insulation. The suitability of these products should be carefully evaluated for the intended application. These products have a relatively short history of use with waterproofing, and their long-term performance is not known. Proper installation is critical to prevent clogging with silt and to allow free passage of water to the drainage system.

10. Drainage System

10.1 Drainage should be installed as a part of the total waterproofing system from a point near the top of the membrane down to the top of the footing or lateral drains. Since it is undesirable to permit water to build up against the wall, a drainage system should be used. Particular emphasis must be placed on rate of flow to the drain along the membrane. The drainage system should be analyzed as to how it functions at the membrane plane and at the collection and transport level.

10.2 *Drainage Course*—Water should be removed from the membrane whenever possible in order to avoid building up hydrostatic pressure against the membrane and particularly against the more vulnerable penetrations, terminations, and joints.

10.2.1 Backfill placed against waterproofed foundation walls should be a clean, porous drainage material. Backfill should be hand placed and hand tamped in layers not exceeding 300 mm [12 in.] in depth. Under no circumstance should backfill placed against the wall contain large or broken rocks, frozen clumps of earth, concrete, wood, or other construction debris, or any large, jagged, or irregular material which could damage the membrane during backfilling, compacting, or settling.

10.2.2 Backfill should contain no more than 8 % fines passing a No. 200 mesh when tested in accordance with Test Method C117.

10.3 When the protection course also provides drainage, the drainage capability of the backfill is less critical. It is recommended, however, not to rely solely on the protection course for adequate long-term drainage. Follow the drainage course manufacturer's requirements for connecting the course to the perimeter footing drain tile.

10.4 Drainage pipes should be placed below the top of the footing to collect water and drain it away, thus minimizing the buildup of a hydrostatic head against the foundation. When it is not possible to provide positive drainage, the quality of the waterproofing membrane and its long-term durability are of the utmost importance.

10.4.1 The selection of the filter fabric shall be in accordance with accepted geotechnical engineering practice. Filter fabric should completely enclose coarse drainage material placed around the drainage pipe to prevent silt from clogging the pipe or slowing drainage to the pipe. See Fig. 1.

11. Keywords

11.1 membrane; vertical surfaces; waterproofing

ASTM International takes no position respecting the validity of any patent rights asserted in connection with any item mentioned in this standard. Users of this standard are expressly advised that determination of the validity of any such patent rights, and the risk of infringement of such rights, are entirely their own responsibility.

This standard is subject to revision at any time by the responsible technical committee and must be reviewed every five years and if not revised, either reapproved or withdrawn. Your comments are invited either for revision of this standard or for additional standards and should be addressed to ASTM International Headquarters. Your comments will receive careful consideration at a meeting of the responsible technical committee, which you may attend. If you feel that your comments have not received a fair hearing you should make your views known to the ASTM Committee on Standards, at the address shown below.

This standard is copyrighted by ASTM International, 100 Barr Harbor Drive, PO Box C700, West Conshohocken, PA 19428-2959, United States. Individual reprints (single or multiple copies) of this standard may be obtained by contacting ASTM at the above address or at 610-832-9585 (phone), 610-832-9555 (fax), or service@astm.org (e-mail); or through the ASTM website (www.astm.org). Permission rights to photocopy the standard may also be secured from the Copyright Clearance Center, 222 Rosewood Drive, Danvers, MA 01923, Tel: (978) 646-2600; http://www.copyright.com/