This international standard was developed in accordance with internationally recognized principles on standardization established in the Decision on Principles for the Development of International Standards, Guides and Recommendations issued by the World Trade Organization Technical Barriers to Trade (TBT) Committee.

Designation: D1212 – 91 (Reapproved 2020)

Standard Test Methods for Measurement of Wet Film Thickness of Organic Coatings[1]

This standard is issued under the fixed designation D1212; the number immediately following the designation indicates the year of original adoption or, in the case of revision, the year of last revision. A number in parentheses indicates the year of last reapproval. A superscript epsilon (ε) indicates an editorial change since the last revision or reapproval.

1. Scope

1.1 These test methods cover the determination of wet film thickness of organic coatings such as paint, varnish, and lacquer. Two methods are described as follows:

1.1.1 In *Test Method A*, the Wet Film Thickness Gage (English or Metric graduation (see 5.1)) is used to measure wet film thicknesses up to 60 mils on the English scale series, and up to 700 µm on the metric scale series (Sections 5 – 8).

1.1.2 In *Test Method B*, the Pfund Gage is used to measure wet film thicknesses up to 14.2 mils (360 µm) (Sections 9 – 13).

1.2 The values stated in SI units are to be regarded as the standard. The values given in parentheses are for information only.

1.3 *This standard does not purport to address all of the safety concerns, if any, associated with its use. It is the responsibility of the user of this standard to establish appropriate safety, health, and environmental practices and determine the applicability of regulatory limitations prior to use.*

1.4 *This international standard was developed in accordance with internationally recognized principles on standardization established in the Decision on Principles for the Development of International Standards, Guides and Recommendations issued by the World Trade Organization Technical Barriers to Trade (TBT) Committee.*

2. Referenced Documents

2.1 *ASTM Standards:*[2]

D823 Practices for Producing Films of Uniform Thickness of Paint, Coatings and Related Products on Test Panels

3. Summary of Test Methods

3.1 The material is applied in the laboratory to plane, rigid test panels or in the field to the surface being coated. The wet film thickness is determined as quickly as possible to reduce shrinkage due to solvent loss.

3.2 In Test Method A, a gage with one eccentric and two concentric wheels is rolled over the surface and the point where the eccentric wheel first touches the wet film is determined.

3.3 In Test Method B, a gage with a convex lower surface is pushed into the wet film until the center touches the substrate. The diameter of the spot of wet coating left on the convex surface is measured and the film thickness calculated from the diameter of the spot and the radius of curvature.

4. Significance and Use

4.1 Wet film thickness measurements aid in the prediction of dry film thickness. In instances where dry film thickness cannot be measured nondestructively, wet film thickness is frequently specified. Also, the ability to determine wet film thickness during application can provide the opportunity to correct the application procedures.

TEST METHOD A

5. Apparatus

5.1 *Wet Film Thickness Gage*—Two versions of the gage are now in use:[3] The original design as shown in Fig. 1 and a later design as shown in Fig. 2. Both designs consists of an eccentric center wheel supported by two concentric wheels so as to provide two scales that are bilaterally symmetrical. As the gage is rolled on the film, there is a change in clearance between the wet film and the eccentric wheel. The point at which the film first touches the center wheel measures the thickness of the film.

5.2 The later design shown in Fig. 2, moves the eccentric wheel from between the concentric wheels, as shown in Fig. 1, to the outside of the gage and closer to one of the concentric wheels. Gage reading errors of parallax across the gage are eliminated as the two scales are placed directly on the eccentric

[1] These test methods are under the jurisdiction of ASTM Committee D01 on Paint and Related Coatings, Materials, and Applications and are the direct responsibility of Subcommittee D01.23 on Physical Properties of Applied Paint Films.

Current edition approved June 1, 2020. Published June 2020. Originally approved in 1952. Last previous edition approved in 2013 as D1212 – 91 (2013). DOI: 10.1520/D1212-91R20.

[2] For referenced ASTM standards, visit the ASTM website, www.astm.org, or contact ASTM Customer Service at service@astm.org. For *Annual Book of ASTM Standards* volume information, refer to the standard's Document Summary page on the ASTM website.

[3] Both versions of this gage (Interchemical (INMONT) and Model "C") are covered by U.S. Patents 2 507 592 and 3 128 558 and are issued to Maynard R. Euverard. Interested parties are invited to submit information regarding the identification of acceptable alternatives to this patented item to the Committee on Standards, ASTM Headquarters. Your comments will receive careful consideration at a meeting of the responsible technical committee, which you may attend.

Copyright © ASTM International, 100 Barr Harbor Drive, PO Box C700, West Conshohocken, PA 19428-2959. United States

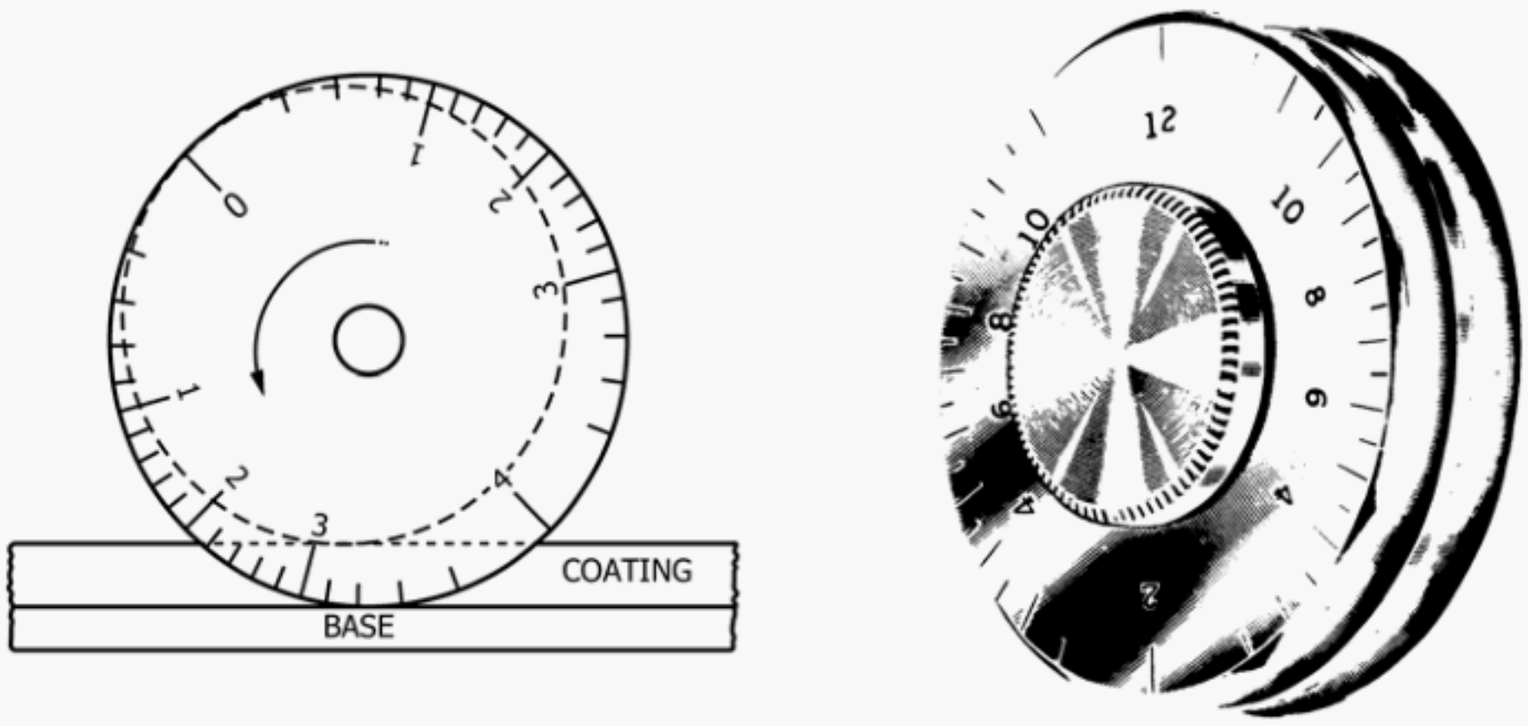

FIG. 1 Interchemical Wet Film Thickness Gages

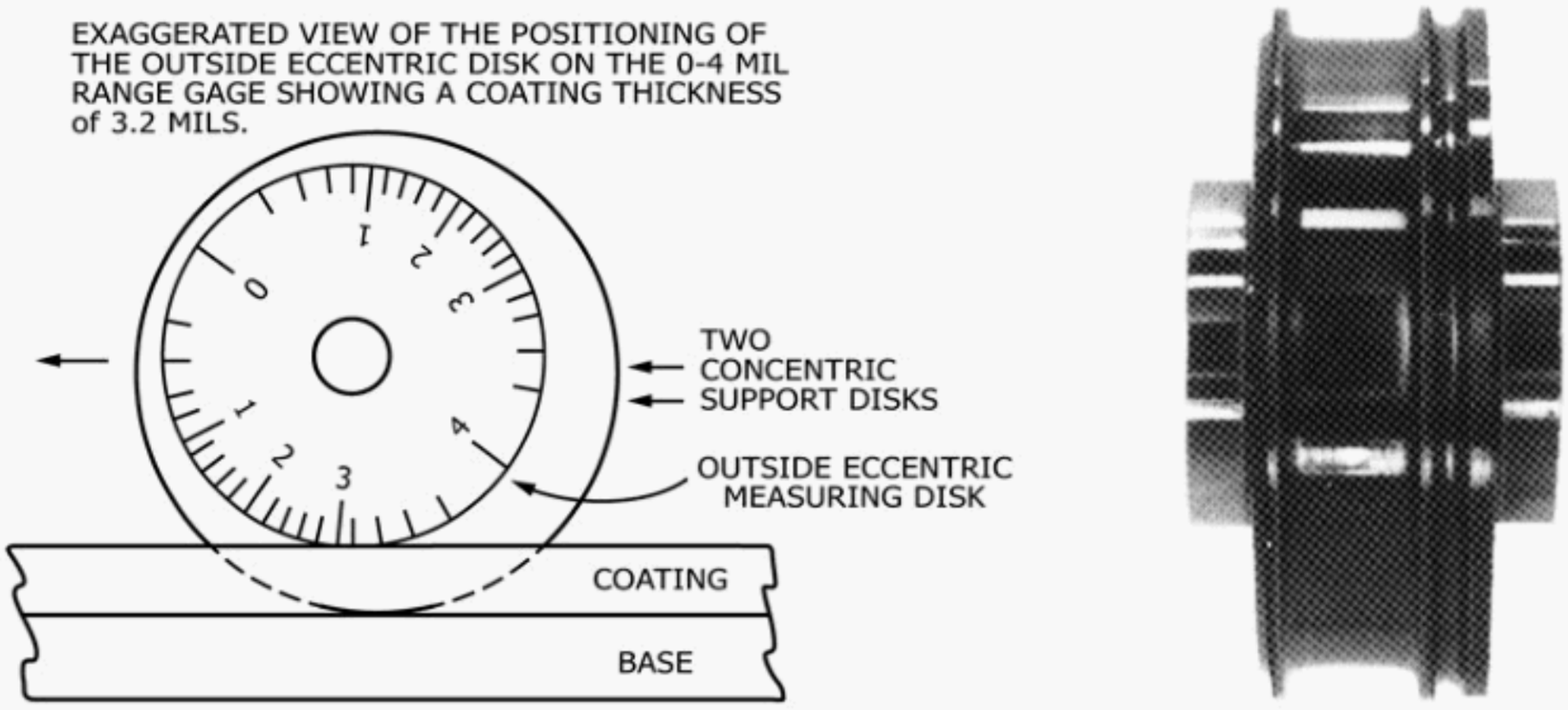

FIG. 2 Model "C" Wet Film Thickness Gages

wheel and errors when measuring on uneven support surfaces are reduced by placing the eccentric wheel closer to one of the supporting concentric wheels.

5.3 Best precision is obtained when using the near linear central portion of each scale, constituting about 80 % of its total range as shown in the diagram in Fig. 1 and Fig. 2. Therefore, the range of the particular gage selected for use should be such that the measured film thickness falls within, and preferably toward the center of the middle 80 % of each scale. Gages are available covering the following ranges in mils and microns:

Range, mils	Smallest Graduation, mils
0 to 2	0.1
0 to 4	0.2
2 to 12	0.5
10 to 30	1.0
20 to 60	2.0

Range, µm	Smallest Graduation, µm
0 to 40	2.0
0 to 100	5.00
50 to 250	10.00
200 to 700	25.00

6. Procedure

6.1 Apply the material in accordance with Practices D823 to suitable plane rigid panels of area sufficiently large to permit film thickness measurements at least 25 mm (1 in.) from any edge. Determine the film thickness immediately after application.

6.2 Support the test panels on a suitable level base in such a way that there will be no movement or spring of the panels during the film thickness measurements. Place the gage on the wet film so that the minimum marking is at the top and the greatest clearance between the eccentric wheel and the film is directly over the wet film. Roll the gage over the film one-half revolution in one direction toward the minimum marking on the gage and repeat in the opposite direction. Read the points at which the coating first makes contact with the eccentric wheel and determine the mean which is considered as one reading.

6.3 If the coating contains a solvent that evaporates rapidly or if the solids content is low, make at least a second separate reading on a freshly applied film and calculate the mean of the separate readings.

7. Report

7.1 Report the mean of the separate readings and the range and smallest graduation of the gage used.

8. Precision [4]

8.1 In an interlaboratory study of this test method, in which two operators in at least six laboratories made measurements with the 0- to 2- and 0- to 4-mil gages on three materials, applied at two film thicknesses, the pooled within-laboratory standard deviation was found to be 0.12 mils with 34 df and the between-laboratories standard deviation 0.18 for two determinations and 0.17 for four determinations with 25 df. Based on these standard deviations, the following criteria should be used for judging the acceptability of results at the 95 % confidence level:

8.1.1 *Repeatability*—Results, each the mean of opposite rolls of the 0- to 2- or 0- to 4-mil gage, obtained by the same operator should be considered suspect if they differ by more than 0.4 mil for two determinations and 0.5 mil for four determinations.

8.1.2 *Reproducibility*—Two results, each the mean of two separate determinations, obtained by operators in different laboratories, should be considered suspect if they differ by more than 0.55 mil.

8.2 The precision of higher range gages is expected to be proportional to film thickness.

TEST METHOD B

9. Apparatus

9.1 *Pfund Gage*—The gage[5] shown in Fig. 3 consists of a convex lens *L*with lower surface having a radius of curvature of 250 mm mounted in a short tube T_1, that slides freely in an outer tube T_2. The compression springs *S*keep the convex surface out of contact with the wet film until pressure is applied to the top of T_1, forcing the lens *L*down through the film. The displaced material forms an oversized circular spot of diameter *D*, on the convex lens (larger than the diameter *D* corresponding to the thickness *T* of the film) because of the meniscus effect due to wetting and surface tension effects on the glass lens.

9.2 *Steel Scale* (furnished with Pfund Gage), calibrated in millimetres.

10. Procedure

10.1 Apply the material to suitable plane, rigid panels of area sufficiently large to permit film thickness measurements at least 25 mm (1 in.) from any edge. Determine the film thickness immediately after application.

10.2 Support the test panels on a suitable flat level base in such a way that there will be no movement or spring of the panels during the film thickness measurements. As shown in the second diagram in Fig. 3, place the gage on the coated surface and slowly force the inner tube down as far as it will go (point *F* on surface *AB* of the base) allowing displaced material to escape through the notches in the outer tube but preventing lateral motion of the gage. Upon releasing the pressure, an oversized circular spot is retained on the lens. Its diameter *D* is the length of the line *EG* and corresponds to the sum of two thicknesses: *AK* = *BC* = thickness of underlying undisturbed coating: and *KE* = *CG* = thickness of overlying displaced coating.

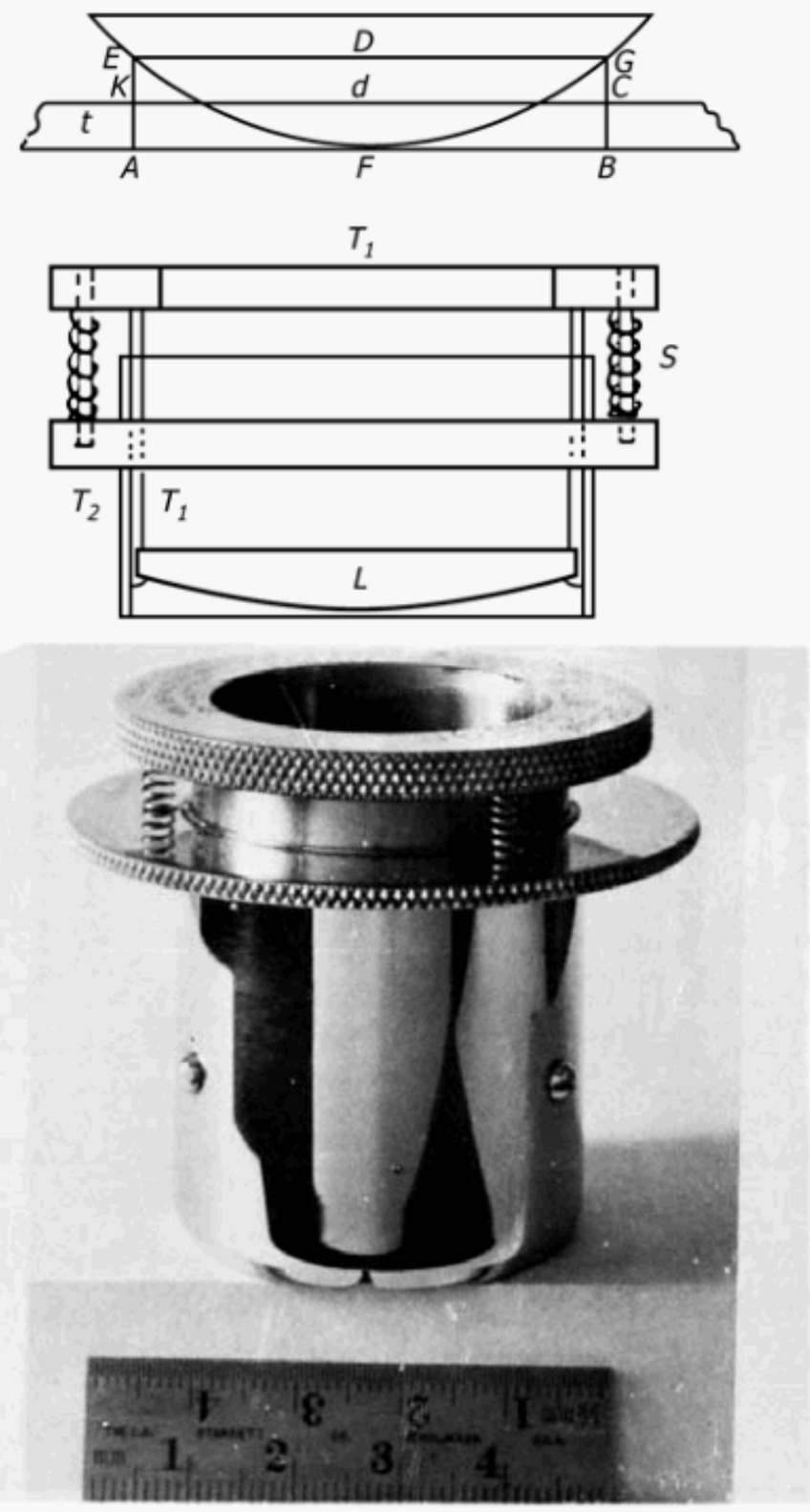

FIG. 3 Pfund Gage

10.3 Remove the gage from the surface, measure to the nearest 0.5 mm in two directions at approximate right angles the diameter of the oversize spot on the lens using the steel scale, and determine the mean of the two measurements that is considered as one reading. Make at least two separate tests to obtain the grand mean film thickness.

10.4 Although this procedure refers to measurements on flat test panels, the same technique may be used in the field or shop on commercial articles, provided the substrate is not distorted at the point of contact to an extent that would affect the measurements.

[4] Supporting data have been filed at ASTM International Headquarters and may be obtained by requesting Research Report RR:D01-1023. Contact ASTM Customer Service at service@astm.org.

[5] Keinrath, G., "Sphere Penetration Gage," *National Institute of Standards and Technology Circular*, NIST, Nat No. 585, Section 1.06, p. 4.

10.5 If coarse particles in the wet film prevent the lens from making contact with the base at the point F, the results will not be valid.

11. Calculation

11.1 The relations between the diameter of the oversized spot on the lens in millimetres, the approximate thickness of the undisturbed wet film, and the coverage in square feet per gallon are given in a printed table supplied with the Pfund gage. It has been found that empirical equations give approximate values for the wet film thickness, t, as follows:

$$t\ (\text{in mils}) = (D^2 \times 1000)/16R \times 25.4 = 0.0943\ D^2$$
$$t\ (\text{in micrometres}) = (D^2 \times 1000)/16R = 0.25\ D^2$$

where:

D = diameter of spot, mm, and
R = radius of curvature of convex lens (250 mm).

based on the fundamental assumption that t is exactly one half of the total thickness of the film at the diameter D, as shown in the second diagram in Fig. 3.

11.2 The Pfund gage cannot be calibrated by the manufacturer prior to delivery. For the best results, a correction factor must be established for each type and thickness of material, based on freshly prepared films of known wet film thickness, as measured by Test Method A (Interchemical Wet Film Thickness Gage).

12. Report

12.1 Report the mean of at least two separate readings as the wet film thickness.

13. Precision [4]

13.1 In an interlaboratory study of this method, in which two operators in five laboratories made measurements on three materials applied at two film thicknesses, the pooled within-laboratory standard deviation was found to be 0.21 mil with 30 df and the between-laboratories standard deviation with 24 df 0.285 mil for two measurements and 0.265 mil for four measurements. Based on these standard deviations, the following criteria should be used for judging the acceptability of results at the 95 % confidence level:

13.1.1 *Repeatability*—Results, which are the mean of the two measurements at right angles, obtained by the same operator should be considered suspect if they differ by more than 0.6 mil for two determinations and 0.8 mil for four determinations.

13.1.2 *Reproducibility*—Two results, each the mean of two separate determinations, obtained by operators in different laboratories, should be considered suspect if they differ by more than 0.85 mil.

14. Keywords

14.1 eccentric center wheel; glass panel reading surface; metals and metallic materials; paint coated panels; wet film thickness gage; wet film thickness measurement

ASTM International takes no position respecting the validity of any patent rights asserted in connection with any item mentioned in this standard. Users of this standard are expressly advised that determination of the validity of any such patent rights, and the risk of infringement of such rights, are entirely their own responsibility.

This standard is subject to revision at any time by the responsible technical committee and must be reviewed every five years and if not revised, either reapproved or withdrawn. Your comments are invited either for revision of this standard or for additional standards and should be addressed to ASTM International Headquarters. Your comments will receive careful consideration at a meeting of the responsible technical committee, which you may attend. If you feel that your comments have not received a fair hearing you should make your views known to the ASTM Committee on Standards, at the address shown below.

This standard is copyrighted by ASTM International, 100 Barr Harbor Drive, PO Box C700, West Conshohocken, PA 19428-2959, United States. Individual reprints (single or multiple copies) of this standard may be obtained by contacting ASTM at the above address or at 610-832-9585 (phone), 610-832-9555 (fax), or service@astm.org (e-mail); or through the ASTM website (www.astm.org). Permission rights to photocopy the standard may also be secured from the Copyright Clearance Center, 222 Rosewood Drive, Danvers, MA 01923, Tel: (978) 646-2600; http://www.copyright.com/