This international standard was developed in accordance with internationally recognized principles on standardization established in the Decision on Principles for the Development of International Standards, Guides and Recommendations issued by the World Trade Organization Technical Barriers to Trade (TBT) Committee.

Designation: D1310 – 14 (Reapproved 2021)

Standard Test Method for Flash Point and Fire Point of Liquids by Tag Open-Cup Apparatus[1]

This standard is issued under the fixed designation D1310; the number immediately following the designation indicates the year of original adoption or, in the case of revision, the year of last revision. A number in parentheses indicates the year of last reapproval. A superscript epsilon (ε) indicates an editorial change since the last revision or reapproval.

This standard has been approved for use by agencies of the U.S. Department of Defense.

1. Scope

1.1 This test method covers the determination by Tag Open-Cup Apparatus of the flash point and fire point of liquids having flash points between −18 and 165°C (0 and 325°F) and fire points up to 325°F.

1.2 This test method, when applied to paints and resin solutions that tend to skin over or that are very viscous, gives less reproducible results than when applied to solvents.

NOTE 1—In order to conserve time and sample, the fire point of a material may be determined by the Tag Open-Cup Method by continuing the heating of the specimen to its fire point. Fire points may also be determined by Test Method D92, which should be used for fire points beyond the scope of this test method.

1.3 The values stated in SI units are to be regarded as the standard. The values given in parentheses are for information only.

1.4 *This standard should be used to measure and describe the properties of materials, products, or assemblies in response to heat and flame under controlled laboratory conditions and should not be used to describe or appraise the fire hazard or fire risk of materials, products, or assemblies under actual fire conditions. However, results of this test may be used as elements of a fire risk assessment which takes into account all of the factors pertinent to an assessment of the fire hazard of a particular end use.*

1.5 **Warning—***Mercury has been designated by many regulatory agencies as a hazardous material that can cause central nervous system, kidney and liver damage. Mercury, or its vapor, may be hazardous to health and corrosive to materials. Caution should be taken when handling mercury and mercury containing products. See the applicable product Safety Data Sheet (SDS) for details and EPA's website, http://www.epa.gov/mercury/faq.htm, for additional information. Users should be aware that selling mercury and/or mercury containing products into your state or country may be prohibited by law.*

1.6 *This standard does not purport to address all of the safety concerns, if any, associated with its use. It is the responsibility of the user of this standard to establish appropriate safety, health, and environmental practices and determine the applicability of regulatory limitations prior to use.*

1.7 *This international standard was developed in accordance with internationally recognized principles on standardization established in the Decision on Principles for the Development of International Standards, Guides and Recommendations issued by the World Trade Organization Technical Barriers to Trade (TBT) Committee.*

2. Referenced Documents

2.1 *ASTM Standards:*[2]

D92 Test Method for Flash and Fire Points by Cleveland Open Cup Tester

D850 Test Method for Distillation of Industrial Aromatic Hydrocarbons and Related Materials

D1015 Test Method for Freezing Points of High-Purity Hydrocarbons (Withdrawn 2019)[3]

D1016 Test Method for Purity of Hydrocarbons from Freezing Points (Withdrawn 2019)[3]

D1078 Test Method for Distillation Range of Volatile Organic Liquids

D1364 Test Method for Water in Volatile Solvents (Karl Fischer Reagent Titration Method) (Withdrawn 2021)[3]

D2268 Test Method for Analysis of High-Purity *n*-Heptane and *Iso*octane by Capillary Gas Chromatography

D2699 Test Method for Research Octane Number of Spark-Ignition Engine Fuel

D2700 Test Method for Motor Octane Number of Spark-Ignition Engine Fuel

E1 Specification for ASTM Liquid-in-Glass Thermometers

[1] This test method is under the jurisdiction of ASTM Committee D01 on Paint and Related Coatings, Materials, and Applications and is the direct responsibility of Subcommittee D01.21 on Chemical Analysis of Paints and Paint Materials.

Current edition approved Feb. 1, 2021. Published February 2021. Originally approved in 1952. Last previous edition approved in 2014 as D1310 – 14. DOI: 10.1520/D1310-14R21.

[2] For referenced ASTM standards, visit the ASTM website, www.astm.org, or contact ASTM Customer Service at service@astm.org. For *Annual Book of ASTM Standards* volume information, refer to the standard's Document Summary page on the ASTM website.

[3] The last approved version of this historical standard is referenced on www.astm.org.

Copyright © ASTM International, 100 Barr Harbor Drive, PO Box C700, West Conshohocken, PA 19428-2959. United States

E1137 Specification for Industrial Platinum Resistance Thermometers
E2251 Specification for Liquid-in-Glass ASTM Thermometers with Low-Hazard Precision Liquids
E2877 Guide for Digital Contact Thermometers

3. Terminology

3.1 *Definitions:*

3.1.1 *flash point, n*—the lowest temperature, corrected to a pressure of 760 mm Hg (101.3 kPa, 1013 mbar), at which application of an ignition source causes the vapor of the specimen to ignite by the procedure described.

3.2 *Definitions of Terms Specific to This Standard:*

3.2.1 *fire point, n*—the lowest temperature at which a specimen sustains burning for a minimum of 5 s by the procedure described.

4. Summary of Method

4.1 The specimen is placed in the cup of a Tag Open-Cup Apparatus and heated at a slow, but constant rate. A small test flame is passed at a uniform rate across the cup at specified intervals until a flash occurs. To determine the fire point, the test is continued until the application of the test flame causes the specimen to ignite and burn for at least 5 s.

5. Significance and Use

5.1 Flash point and fire point of a liquid are physical properties that may be used to define their flammability hazards. The flash point may be used to classify materials in government regulations.

6. Apparatus

6.1 *Flash Tester*—Tag Open-Cup Apparatus (Fig. 1), as described in detail in Annex A1.

6.2 *Shield,* as described in detail in Annex A1.

6.3 *Thermometers,* conforming to Specification E1, as listed in Table 1 Alternative temperature measuring devices are permitted providing they have a similar response time and meet the respective performance and immersion depth specifications of thermometers listed in Specification E1. See Specifications E1137 and E2251, and Guide E2877 when selecting alternative temperature measuring devices.

6.4 *Flasks,* 500-mL, two, with rubber stoppers.

7. Materials

7.1 *Water-Glycol Solution* (1 + 1), for flash points from −18 to 93°C (0 to 200°F).

7.2 *Solid Carbon Dioxide-Acetone or other Coolant.*

7.3 *Silicone Fluid,* inert, high boiling, having a flash point exceeding the test temperatures by at least 60°C (110°F) for flash and fire points from 93 to 165°C (200 to 325°F).

7.4 *n-Heptane,*[4] for determination of flash points from − 18 to 16°C (0 to 60°F). See Annex A2 for specifications.

7.5 *p-Xylene,*[4] for determination of flash points from 16 to 93°C (60 to 200°F). See Annex A2 for specifications.

7.6 *Isopropanol (isopropyl alcohol),*[5] for determination of flash points from 16 to 93°C (60 to 200°F). See Annex A2 for specifications.

7.7 *Diethylene Glycol,*[6] for determination of flash points from 93 to 165°C (200 to 325°F). See Annex A2 for specifications.

8. Assembly and Preparation of Apparatus

8.1 Place the tester in a level position on a solid table free of vibration, in a location free of perceptible draft, and in a dim light. Maintain a room temperature of 24 ± 3°C (75 ± 5°F) throughout the test. Other room temperatures may be specified on agreement between buyer and seller.

NOTE 2—For materials with vapors or products of pyrolysis that are objectionable, it is permissible to place the apparatus with shield in a fume hood with the ventilation turned off. The ventilation can then be turned on at completion of the test, or when and if fumes become objectionable.

8.2 Adjust the horizontal and vertical positions of the taper so that the jet passes on the circumference of a circle having a radius of at least 6 in. (150 mm). The jet should pass across the center of the cup at right angles to a diameter passing through the thermometer and in a plane ⅛ in. (3.2 mm) above the upper edge of the cup as measured from the center of the orifice.

8.3 Using the leveling device as a gage, adjust the height of the taper so that the center of the orifice is exactly ⅛ in. (3.2 mm) above the top edge of the glass cup when it is in place. It is imperative that this adjustment be made as accurately as possible. Raising or lowering the taper can be achieved by bending it slightly or preferably by adding and removing thin metal shims as required from between the taper and the vertical supporting member of the swivel holder.

8.4 With the glass cup in place in the bath, adjust the thermometer holder so that the thermometer is supported firmly in a vertical position halfway between the center and edge of the cup and on a line passing through the center of the cup and the pivot of the taper. Place the thermometer so that the bottom of the bulb is ¼ in. (6.4 mm) from the inner bottom of the cup.

8.5 Set the draft shield around the tester so that the sides form right angles with each other and the tester is well toward the back of the shield.

9. Procedure

9.1 *Flash Points from −18 to 16°C (0 to 60°F)* (**Warning—** Meticulous attention to all details relating to the taper, size of taper flame, rate of temperature increase, and rate of passing the taper over the sample is necessary for good results.)

9.1.1 Equip two 500-mL flasks with rubber stoppers through which are inserted ASTM 33C (33F) thermometers. Cool a quantity of 1 + 1 water-glycol solution in one stoppered

[4] Satisfactory *n*-heptane and *p*-xylene can be obtained from Special Products Division, Chemical Department, Phillips Petroleum Company, Drawer O, Borger, TX 79607.

[5] Satisfactory isopropanol may be obtained from Exxon Chemical, Americus P. O. Box 3272, Houston, TX 77001, Shell Chemical Co., One Shell Plaza, Houston, TX 77002, or Union Carbide Co., P. O. Box 8361, South Charleston, WV 25303.

[6] Satisfactory diethylene glycol may be obtained from Union Carbide Co., S. Charleston, WV.

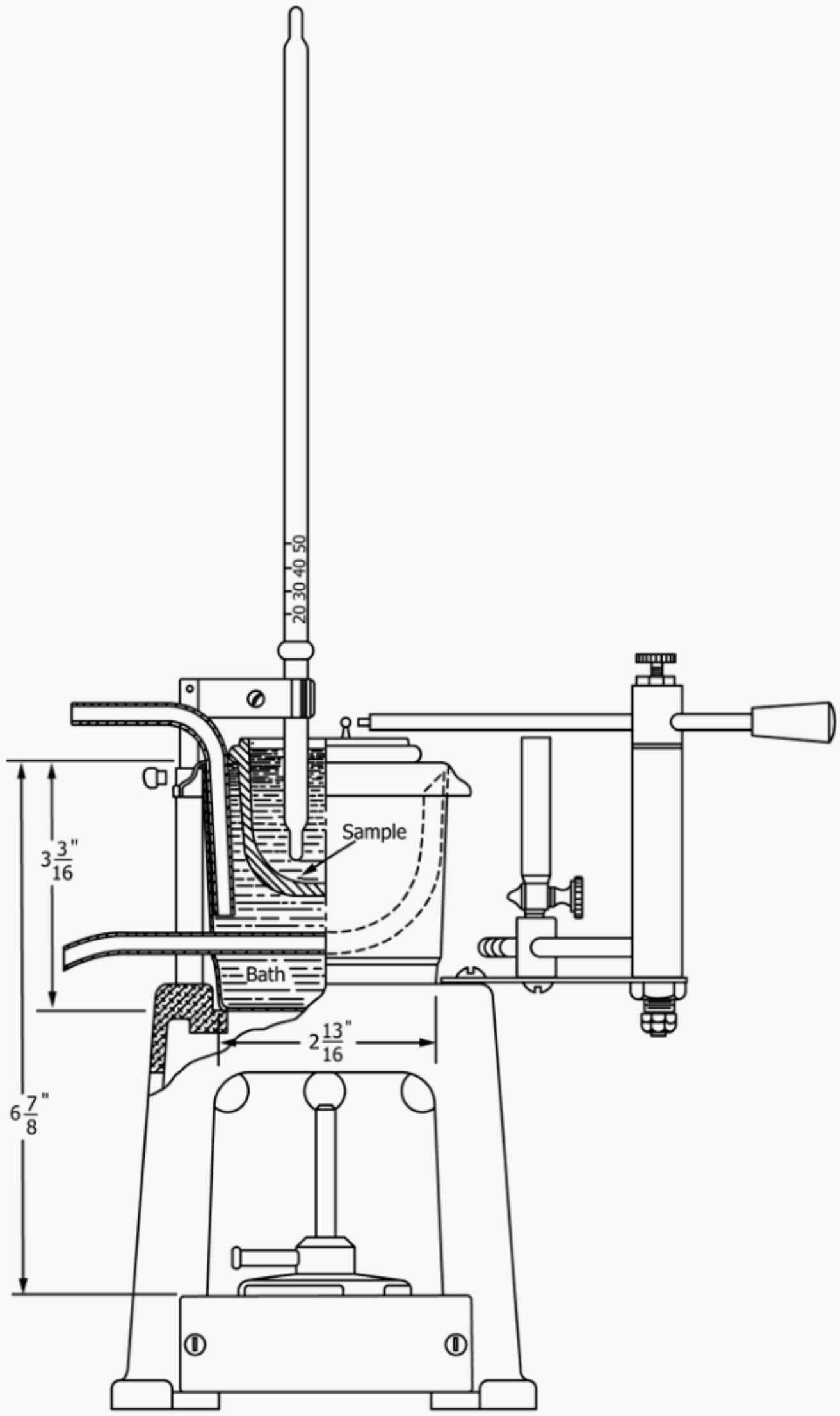

Metric Equivalents

in.	mm
2 13/16	71.4
3 3/16	81
6 7/8	174.5

FIG. 1 Tag Open-Cup Apparatus

TABLE 1 Thermometers

	ASTM Thermometer Number	Thermometer Range	Thermometer Subdivisions
Flash Point/ Fire Point:			
0 to 60°F	33F-75	−36.5 to + 107.5°F	0.5°F
−18 to 15°C	33C-75	−38 to + 42°C	0.2°C
60 to 200°F	9F-75	20 to 230°F	1°F
15 to 93°C	9C-75	−5 to 110°C	0.5°C
200 to 325°F	35F-79	194 to 338°F	0.5°F
93 to 165°C	35C-79	90 to 170°C	0.2°C

500-mL flask to approximately −30°C (−20°F) by immersing the flask in a solid carbon dioxide-acetone bath or other coolant. Use extreme care not to contaminate the water-glycol solution with either acetone or carbon dioxide.

9.1.2 Pour the cooled water-glycol solution into the tester bath to a predetermined level 3.2 mm (⅛ in.) below the top when the cup is in place. An overflow is desirable for controlling the liquid level in the bath.

9.1.3 At the same time the water-glycol coolant is being chilled, cool a portion of the sample to approximately −25°C (−10°F) in the second stoppered 500-mL flask. If solid carbon dioxide and acetone or other volatile solvents are used as a coolant, extreme care must be exercised to avoid contamination of the sample. Cool the glass cup and place it in the bath. Position the appropriate thermometer (Table 1) as described in 8.4 and fill the cup with cooled sample to a depth approximately 3.2 mm (⅛ in.) below the edge as determined by the leveling device.

NOTE 3—Remove all bubbles from the surface of the liquid before starting a determination.

9.1.4 Light the ignition flame and adjust it to form a flame of spherical shape matching in size the 5⁄32-in. (4.0-mm) sphere on the apparatus or the 5⁄32-in. hole in the leveling device.

9.1.5 Make the final adjustment of the specimen level in the cup when the temperature is 20°F (10°C) below the anticipated flash point. Two trial determinations may be necessary to select the proper temperature at which to adjust the liquid level. A hypodermic syringe or medicine dropper provides a convenient means of adding or removing sample from the cup.

9.1.6 Allow the temperature of the specimen to increase spontaneously—without applying any heat—until the rate of temperature rise decreases to 2°F (1°C)/min. At this point, apply heat to maintain an increase in temperature at a rate of 2 ± 0.5°F (1 ± 0.25°C)/min.

NOTE 4—With viscous materials, this rate of heating cannot always be maintained.

9.1.7 Determine the approximate flash point by passing the taper flame across the specimen at intervals of 2°F (1°C). Make the first pass of the taper flame immediately after the final adjustment of the specimen level, as in 9.1.5. The time required to pass the ignition flame across the surface of the liquid should be 1 s. Each pass must be in one direction only, and the taper should be kept in the "off" position at one or the other end of the swing except when the flame is applied to the specimen. In case the material tends to "creep" over the edge of the cup, carefully wipe the edge with absorbant tissue to remove frost and liquid, just prior to passage of the taper over the cup.

NOTE 5—When determining the flash point or fire point, or both, of viscous liquids and those liquids that tend to form a surface film, the following procedure is suggested: About 15 s before the taper is passed over the surface, insert the end of a stirring rod to a depth of about ½ in. (15 mm) in approximately a vertical position. Move the rod from side-to-side of the cup for three or four complete passes following approximately the path of the taper, remove, and make the test.

NOTE 6—Discontinue heating and checking flash point if the specimen boils before flashing. Record that the material has no flash point prior to boiling.

9.1.8 Continue with procedure in 9.4.

9.2 *Flash Points from 60 to 200°F (16 to 93°C)* (See 9.1 and Notes 3-5):

9.2.1 Fill the bath with cold water or water-glycol solution to a predetermined level ⅛ in. (3.2 mm) below the top when the cup is in place. The bath liquid should be at least 30°F (17°C) below the anticipated flash point.

9.2.2 If necessary, cool a portion of the sample to at least 20°F (10°C) below the anticipated flash point. Exercise adequate care to avoid contamination of the sample with coolant liquid or vapors. Fill the glass cup with the cooled sample to a depth approximately ⅛ in. (3.2 mm) below the edge as determined by the leveling device, with the proper thermometer (see Table 1) positioned as described in 8.4.

9.2.3 For final adjustment of the specimen level, see 9.1.5.

9.2.4 Light the ignition flame and adjust it as described in 9.1.4.

9.2.5 Apply heat to the liquid bath and adjust so that the temperature of the specimen increases at a rate of 2 ± 0.5°F (1 ± 0.25°C)/min.

9.2.6 Determine the approximate flash point by passing the taper flame across the specimen at intervals of 2°F (1°C) as described in 9.1.7.

9.2.7 Continue with procedure in 9.4.

9.3 *Procedure for Flash Points from 200 to 325°F* (93 to 165°C) (See 9.1 and Notes 3-5):

9.3.1 Fill the bath with a high-boiling inert silicone fluid to a predetermined level ⅛ in. (3.2 mm) below the top when the cup is in place.

9.3.2 With the appropriate thermometer (see Table 1) properly positioned (8.4), fill the glass cup with sample at room temperature to a depth slightly more than ⅛ in. (3.2 mm) below the edge as determined by the leveling device.

9.3.3 For final adjustment of the specimen level, see 9.1.5.

9.3.4 Light the ignition flame and adjust it as described in 9.1.4.

9.3.5 Apply full heat to the liquid bath; when the temperature of the specimen reaches approximately 190°F (90°C), adjust the heat input so that the temperature of the specimen increases at a rate of 2 ± 0.5°F (1 ± 0.25°C)/min.

NOTE 7—The heaters on some testers do not have sufficient capacity to maintain the proper rate of heating when the temperature approaches 250°F (120°C) or above. The heat input to the liquid bath may be increased if necessary by using a variable transformer to increase the voltage to the heater or by wrapping the bath with electrical heating tape. The application of suitable insulation to the outside of the bath to prevent heat loss is also permissible. The important factor is to maintain the rate

of temperature increase of the specimen at 2 ± 0.5°F (1 ± 0.25°C)/min.

9.3.6 Determine the approximate flash point by passing the taper flame across the specimen at intervals of 2°F (1°C) as described in 9.1.7.

9.4 Determine and record not less than three test values, as follows:

9.4.1 After the initial test to determine the approximate flash point of the materials, repeat the procedure by cooling a fresh portion of the sample, the glass cup, the bath solution, and the thermometer to more than 20°F (10°C) below the approximate flash point. When the temperature of the specimen is exactly 20°F below the approximate flash point, adjust the center of the liquid level to ⅛ in. (3.2 mm) below the upper edge of the cup as determined with the leveling device placed across the diameter of the cup.

9.4.2 Resume heating, or allow the temperature to rise spontaneously in the case of materials flashing below 60°F (16°C). Following the instructions given in 9.1.7, pass the taper flame across the specimen at two intervals of 5°F (3°C) and then at intervals of 2°F (1°C) until the flash point is reached.

9.5 *Fire Point (Sustained Burning):*

9.5.1 Except for the initial test, after determining the flash point, continue heating the apparatus so that the temperature of the specimen increases at the rate of 2 ± 0.5°F (1 ± 0.25°C)/min. At intervals of 2°F (1°C), pass the taper across the surface of the specimen as described in 9.1.7 and in Note 6 and determine the temperature at which burning is sustained for 5 s after ignition (fire point). Time the duration of burning from the time the taper (ignition source) has completed its passage across the surface of the liquid.

9.5.2 Determine and record the results obtained from the continuation of three or more flash point tests (9.4).

10. Instrument Verification

NOTE 8—The height of the taper is very important. Raising the taper 0.01 in. (0.25 mm) increases the flash point about 2°F (1°C). Each apparatus should be verified about once a week, if in constant use; or on each occasion of use, when used only occasionally.

10.1 *Flash Points from 0 to 60°F (−18 to 16°C)* (see Note 8).

10.1.1 Make a determination of the flash point of *n*-heptane that meets the specifications set forth in Annex A2, corrected for barometric pressure (see Section 11). If the flash point differs from 23 ± 3°F (−5 ± 1.5°C), adjust the height of the taper and rerun *n*-heptane until the flash point is within the stated tolerance.

10.2 *Flash Points from 60 to 200°F (16 to 93°C)* (see Note 8).

10.2.1 Make a determination of the flash point of *p*-xylene that meets the specifications set forth in Annex A2, corrected for barometric pressure (see Section 11). If the flash point differs from 92 ± 3°F (33 ± 1.5°C), adjust the height of the taper and rerun *p*-xylene until the flash point is within the stated tolerance.

10.3 *Flash Points from 200 to 325°F (93 to 165°C)* (see Note 8).

10.3.1 Make a determination of the flash point diethylene glycol that meets the specifications set forth in Annex A2, corrected for barometric pressure (see Section 11). If the flash point from 295 ± 10°F (146 ± 5°C), adjust the height of the taper and rerun diethylene glycol until the flash point is within the stated tolerance.

11. Correction for Barometric Pressure

11.1 Observe and record the ambient barometric pressure at the time of the test. When the barometric pressure differs from 101.3 kPa (760 mm Hg), correct the observed flash point or fire point, or both, as follows:

$$\textit{Corrected flash point} = C + 0.25\,(101.3 - p) \quad (1)$$

$$\textit{Corrected flash point} = F + 0.06\,(760 - P) \quad (2)$$

$$\textit{Corrected flash point} = C + 0.033\,(760 - P) \quad (3)$$

where:

C = observed flash point in °C
F = observed flash point in °F
p = ambient barometric pressure in kPa
P = ambient barometric pressure in mm Hg.

NOTE 9—The barometric pressure used in this calculation is the ambient pressure for the laboratory at the time of the test. Many aneroid barometers, such as those used at weather stations and airports are precorrected to give sea level readings and would not give the correct reading for this test.

11.2 Round off the corrected flash point to the nearest 1°F (0.5°C).

12. Report

12.1 Report the mean of not less than three corrected recorded tests, other than the initial test, to the nearest 1°F (0.5°C). Three multiple runs are acceptable for averaging if the difference between the extreme values does not exceed 7°F (4°C) (95 % confidence level).

13. Precision[7]

13.1 The following criteria should be used for judging the acceptability of results between 0 and 200°F (−18 and 93°C) at the 95 % confidence level).

13.1.1 *Repeatability*—Two results, each the mean of three determinations, obtained by the same operator should be considered suspect if they differ by more than 4°F (2°C).

13.1.2 *Reproducibility*—Two results, each the mean of three determinations, obtained by operators in different laboratories should be considered suspect if they differ by more than 7°F (4°C).

13.2 The following criteria should be used for judging flash points between 200 and 325°F (93 and 165°C) at the 95 % confidence level.

13.2.1 *Repeatability*—Two results, each the mean of three determinations, obtained by the same operator should be considered suspect if they differ by more than 9°F (5°C).

13.2.2 *Reproducibility*—Two results, each the mean of three determinations, obtained by operators in different laboratories should be considered suspect if they differ by more than 12°F (7°C).

[7] Supporting data have been filed at ASTM International Headquarters and may be obtained by requesting Research Report RR:D01-1002. Contact ASTM Customer Service at service@astm.org.

13.3 On the basis of an interlaboratory test of the method, using viscous, heavily-pigmented materials that tended to form a surface film, the within-laboratory standard deviation was found to be 3°F (2°C) and the between-laboratories standard deviation was found to be 7°F (4°C). Based on these standard deviations, the following criteria should be used for judging the acceptability of results at the 95 % confidence level:

13.3.1 *Repeatability*—Two results, each the mean of three determinations, obtained by the same operator on different days should be considered suspect if they differ by more than 5°C (9°F).

13.3.2 *Reproducibility*—Two results, each the mean of three determinations, obtained by operators in different laboratories should be considered suspect if they differ by more than 13°C (24°F).

13.4 The precision of fire points will be determined. See Test Method D92 for precision using the Cleveland Open Cup.

13.5 *Bias*—No estimate of bias of flash point and fire point tests can be determined, as no absolute values are available. The tests are equipment and method dependent.

14. Keywords

14.1 fire point; flash point; liquids; paints; resin solutions; Tag tester

ANNEXES

(Mandatory Information)

A1. APPARATUS

A1.1 *Tag Open-Cup Apparatus*, shown in Fig. 1. It consists of the following parts, which must conform to the dimensions shown, and have the additional characteristics as noted:

A1.1.1 *Copper Bath,* preferably equipped with a constant-level overflow so placed as to maintain the bath liquid level ⅛ in. (3.2 mm) below the rim of the glass cup.

A1.1.2 *Thermometer Holder,* supplied with the tester as shown in Fig. 1 to support the thermometer firmly in a vertical position.

NOTE A1.1—The spring clamp holding the thermometer part may be replaced by a set-screw facing out away from the bath as shown in Fig. 1. This may make it easier and safer to extinguish the fire after the fire point has been reached.

A1.1.3 *Glass Test Cup* (Fig. A1.1), of molded clear glass, annealed, heat-resistant, and free from surface defects.

A1.1.4 *Leveling Device,* or gage, for proper adjustment of the liquid in the cup (Fig. A1.2) made of polished aluminum or stainless steel ⅛ in. (3.2 mm) thick, with two projections for adjusting the liquid level in the glass cup to 0.125 in. ± 0.003 in. (3.18 ± 0.08 mm) below the top edge or rim of the cup. This leveling device may also be used to adjust the size of the test flame and for gaging the height of the taper above the edge of the cup.

A1.1.5 *"Micro" or Small Gas Burner,* of suitable dimensions for heating the bath. A screw clamp may be used to help regulate the gas. A small electric heater controlled by a variable power transformer may be used.

A1.1.6 *Ignition Taper,* a small, straight blow-pipe type gas burner with the tip approximately 1⁄16 in. (1.5 mm) in diameter and the orifice 1⁄32 in. (0.8 mm) in diameter. The ignition taper should be maintained in a fixed horizontal plane above the test cup by means of a swivel device so that the test flame passes on the circumference of a circle having a radius of at least 6 in. (150 mm).

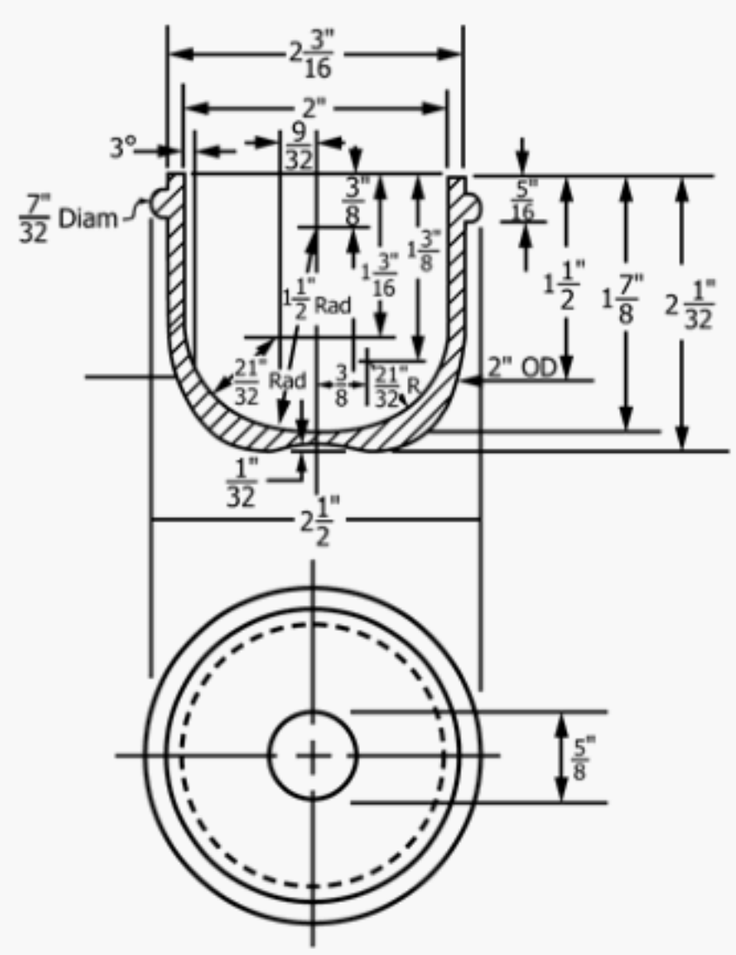

Metric Equivalents

in.	mm	in.	mm
1⁄32	0.8	1 3⁄16	30.1
7⁄32	5.5	1 3⁄8	34.9
9⁄32	7.0	1 1⁄2	38.1
5⁄16	7.5	1 7⁄8	47.6
3⁄8	9.5	2	50.8
5⁄8	15.9	2 1⁄32	51.6
21⁄32	16.6	2 3⁄16	55.5
		2 1⁄2	63.5

FIG. A1.1 Glass Test Cup

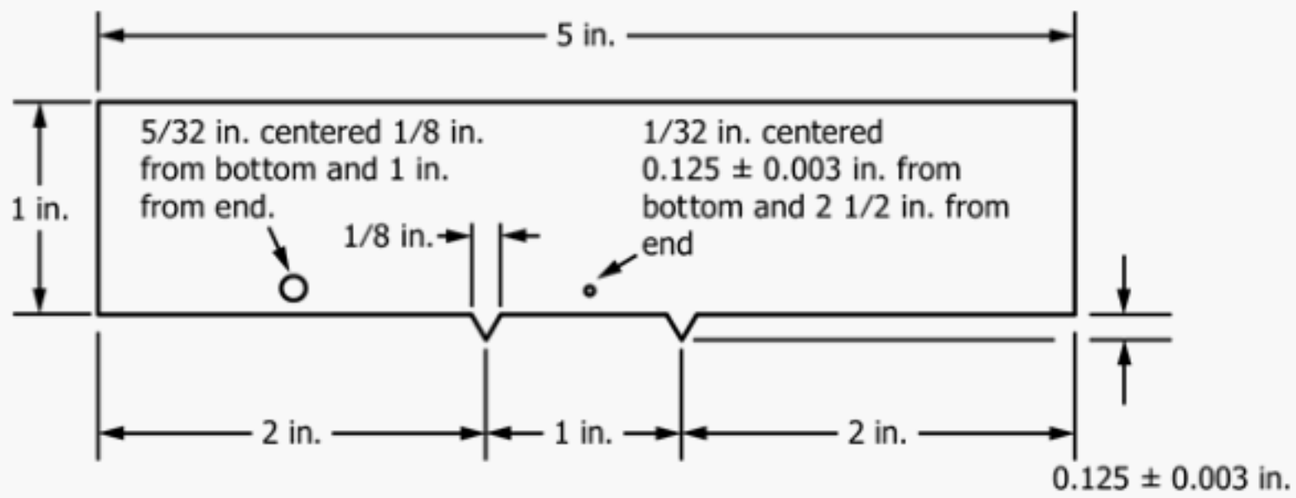

Metric Equivalents

in.	mm
1/32	0.8
1/8	3.2
0.125 ± 0.003	3.18 ± 0.08
5/32	4.0
1	25.4
2	50.8
2½	63.5
5	127

FIG. A1.2 Leveling Device for Adjusting Liquid Level in Test Cup, Height of Taper above Cup, and Size of Test Flame

A1.1.7 *Draft Shield,* consisting of two rectangular sheets of noncombustible material, 24 by 28 in. (610 by 710 mm), fastened together along the 28-in (710-mm) side, preferably by hinges. A triangular sheet, 24 by 24 by 34 in. (610 by 610 by 860 mm), is fastened by hinges to one of the lateral sheets (to form a top when shield is open). The interior of the draft shield shall be painted a flat black. A draft-free fume hood may be used.

A2. SPECIFICATIONS FOR *n*-HEPTANE, *p*-XYLENE, ISOPROPANOL, AND DIETHYLENE GLYCOL

A2.1 *Specifications for n-Heptane*[6] *(ASTM Knock Test Reference Fuel)*—*n*-Heptane shall conform to the following requirement:

A2.1.1 *Purity*—99.75 % when determined by Test Method D2268.

NOTE A2.1—This is the same grade of *n*-heptane specified in Test Methods D2699 and D2700.

A2.2 *Specifications for p-Xylene (Flash Point Check Grade)*[6]—*p*-Xylene shall conform to the following requirements:

A2.2.1 *Specific Gravity*—15.56/15.56°C—0.863 ± 0.003 max.

A2.2.2 *Boiling Range*—2°C max from start to dry point, when tested in accordance with Test Method D850 or Test Method D1078. The range shall include the boiling point of pure *p*-xylene, which is 138.35°C (281.03°F).

A2.2.3 Freezing point 11.23°C, min calculated in accordance with Test Method D1016, from the experimentally determined freezing point, measured by Test Method D1015.

A2.3 *Specifications for Isopropanol (Isopropyl Alcohol)* 91 % (Volume)[7]—Isopropanol shall conform to the following requirements:

A2.3.1 *Specific Gravity*—0.8180 ± 0.0005 at 20/20°C as determined by means of a calibrated pycnometer.

A2.3.2 *Distillation Range*—Shall entirely distill within a 1.0°C range that shall include the temperature 80.4°C as determined by Test Method D1078.

A2.4 *Specifications for Diethylene Glycol*[11]—Diethylene glycol shall conform to the following requirements:

A2.4.1 *Specific Gravity*—1.1185 ± 0.0015 at 20/20°C as determined by means of a calibrated pycnometer.

A2.4.2 *Distillation Range*—Shall entirely distill within a 5.0 range which shall include the temperature 245.8°C as determined by Test Method D1078.

A2.4.3 *Water*—Not more than 0.2 % as determined by Test Method D1364.

ASTM International takes no position respecting the validity of any patent rights asserted in connection with any item mentioned in this standard. Users of this standard are expressly advised that determination of the validity of any such patent rights, and the risk of infringement of such rights, are entirely their own responsibility.

This standard is subject to revision at any time by the responsible technical committee and must be reviewed every five years and if not revised, either reapproved or withdrawn. Your comments are invited either for revision of this standard or for additional standards and should be addressed to ASTM International Headquarters. Your comments will receive careful consideration at a meeting of the responsible technical committee, which you may attend. If you feel that your comments have not received a fair hearing you should make your views known to the ASTM Committee on Standards, at the address shown below.

This standard is copyrighted by ASTM International, 100 Barr Harbor Drive, PO Box C700, West Conshohocken, PA 19428-2959, United States. Individual reprints (single or multiple copies) of this standard may be obtained by contacting ASTM at the above address or at 610-832-9585 (phone), 610-832-9555 (fax), or service@astm.org (e-mail); or through the ASTM website (www.astm.org). Permission rights to photocopy the standard may also be secured from the Copyright Clearance Center, 222 Rosewood Drive, Danvers, MA 01923, Tel: (978) 646-2600; http://www.copyright.com/