This international standard was developed in accordance with internationally recognized principles on standardization established in the Decision on Principles for the Development of International Standards, Guides and Recommendations issued by the World Trade Organization Technical Barriers to Trade (TBT) Committee.

Designation: D2062 – 03 (Reapproved 2021)

Standard Test Methods for Operability of Zippers[1]

This standard is issued under the fixed designation D2062; the number immediately following the designation indicates the year of original adoption or, in the case of revision, the year of last revision. A number in parentheses indicates the year of last reapproval. A superscript epsilon (ε) indicates an editorial change since the last revision or reapproval.

1. Scope

1.1 These test methods cover procedures for determining the following characteristics of zippers:

	Sections
Opening and Closing of Zippers	14 – 17
Separator Functioning of Zippers	18 – 22
Sticking of Zippers at Stops	10 – 13

1.2 *This standard does not purport to address all of the safety concerns, if any, associated with its use. It is the responsibility of the user of this standard to establish appropriate safety, health, and environmental practices and determine the applicability of regulatory limitations prior to use.*

1.3 *This international standard was developed in accordance with internationally recognized principles on standardization established in the Decision on Principles for the Development of International Standards, Guides and Recommendations issued by the World Trade Organization Technical Barriers to Trade (TBT) Committee.*

2. Referenced Documents

2.1 *ASTM Standards:*[2]

D123 Terminology Relating to Textiles
D2050 Terminology Relating to Subassemblies Used in the Manufacture of Textiles
D2051 Test Method for Durability of Finish of Zippers to Laundering
D2052 Test Method for Colorfastness of Zippers to Drycleaning
D2053 Test Method for Colorfastness of Zippers to Light
D2054 Test Method for Colorfastness of Zipper Tapes to Crocking
D2057 Test Method for Colorfastness of Zippers to Laundering
D2058 Test Method for Durability of Finish of Zippers to Drycleaning
D2059/D2059M Test Method for Resistance of Zippers to Salt Spray (Fog)
D2060 Test Methods for Measuring Zipper Dimensions
D2061 Test Methods for Strength Tests for Zippers

3. Terminology

3.1 *Definitions:*

3.1.1 For definitions of zipper terms used in these test methods, refer to Terminology D2050. For definitions of other textile terminology used in these test methods, refer to Terminology D123.

4. Significance and Use

4.1 The significance of specific tests is discussed in the appropriate sections.

4.2 These test methods are considered satisfactory for acceptance testing of commercial shipments of zippers because the methods have been used extensively in the trade for this purpose, even though current estimates of between-laboratory precision are quite large in some cases.

4.2.1 If there are differences of practical significance between reported test results for two laboratories (or more), comparative test should be performed to determine if there is a statistical bias between them, using competent statistical assistance. As a minimum, the test samples should be used that are as homogeneous as possible, that are drawn from the material from which the disparate test results were obtained, and that are randomly assigned in equal numbers to each laboratory for testing. Other materials with established test values may be used for this purpose. The test results from the two laboratories should be compared using a statistical test for unpaired data, at a probability level chosen prior to the testing series. If a bias is found, either its cause must be found and corrected, or future test results must be adjusted in consideration of the known bias.

4.3 The method(s) in the standard along with those in Test Methods D2051, D2052, D2053, D2054, D2057, D2058, D2059/D2059M, D2060, and D2061 are a collection of proven test methods. They can be used as aids in the evaluation of zippers without the need for a thorough knowledge of zippers. The enumerated test methods do not provide for the evaluation

[1] These test methods are under the jurisdiction of ASTM Committee D13 on Textiles and are the direct responsibility of Subcommittee D13.54 on Subassemblies. The methods were developed in cooperation with the Slide Fastener Assn., Inc.

Current edition approved July 1, 2021. Published July 2021. Originally approved in 1961. Last previous edition approved in 2014 as D2062 – 03(2014). DOI: 10.1520/D2062-03R21.

[2] For referenced ASTM standards, visit the ASTM website, www.astm.org, or contact ASTM Customer Service at service@astm.org. For *Annual Book of ASTM Standards* volume information, refer to the standard's Document Summary page on the ASTM website.

Copyright © ASTM International, 100 Barr Harbor Drive, PO Box C700, West Conshohocken, PA 19428-2959. United States

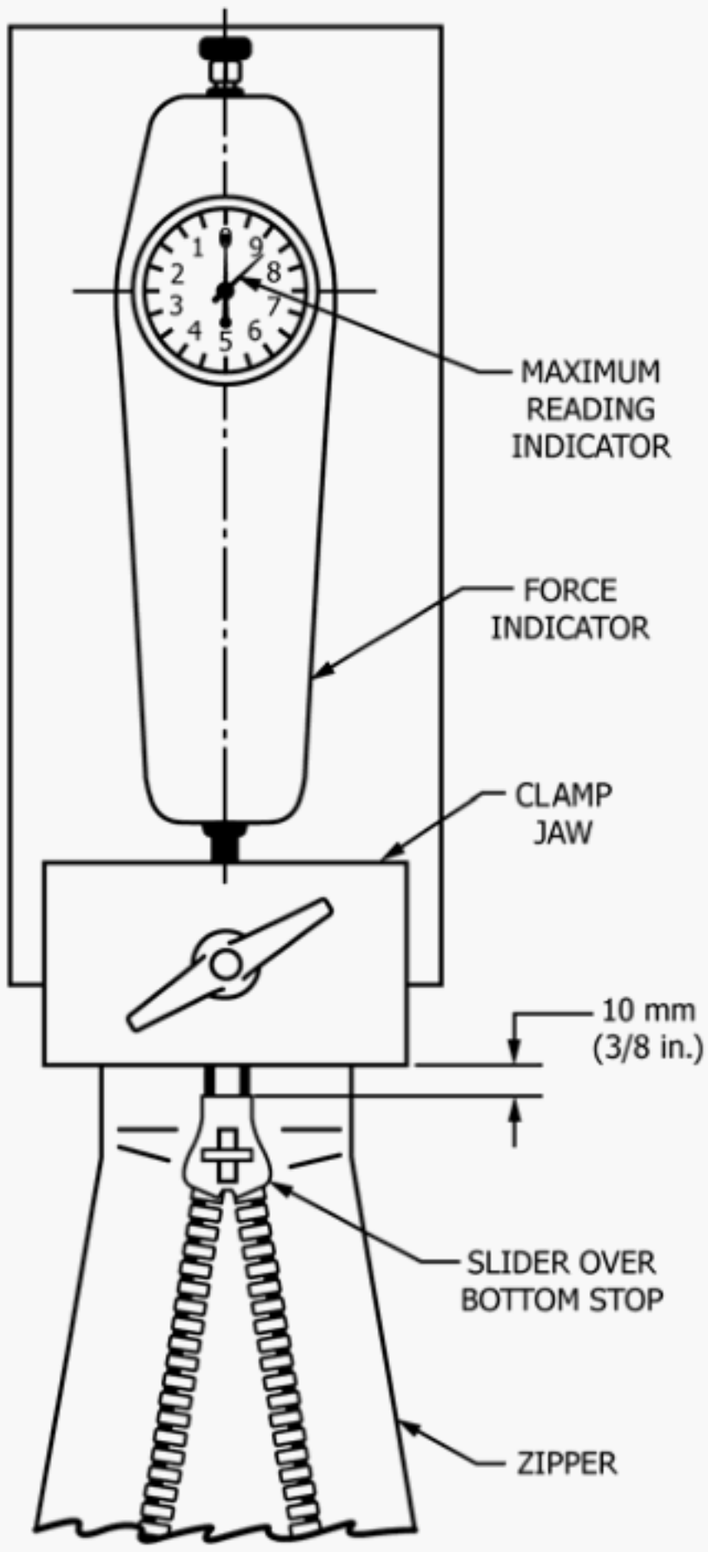

FIG. 1 Slider Sticking on Bottom Stop

of all zipper properties. Besides those properties measured by means of the enumerated test methods there are other properties that may be important for the satisfactory performance of a zipper. Test methods for measuring those properties have not been published either because no practical methods have yet been developed or because a valid evaluation of the information resulting from existing unpublished methods requires an intimate and thorough knowledge of zippers.

5. Apparatus

5.1 *Force Indicator*[3] (Fig. 1)—A 50 N or 10 lbf capacity force indicator equipped with a direct-reading dial graduated in 0.5 N or 0.1 lbf divisions, a maximum-reading indicator, and a clamp suitable for attaching the zipper tape ends to the indicator.

5.2 *Spacer*—A piece of metal designed to fit in the pin cavity of the fixed retainer of the specimen and having a length equal to the element pitch of the specimen.

5.3 *Hooks,* suitable for attaching the force indicator to the slider pull of a specimen.

[3] Drawings for the force indicator fixture shown is available from the various zipper manufacturers upon request.

6. Sampling

6.1 *Lot Sample*—As a lot sample for acceptance testing, take at random the number of individual containers from each shipping carton as directed in an applicable material specification or other agreement between the purchaser and the supplier. Consider individual containers from each shipping carton to be the primary sampling units.

NOTE 1—An adequate specification or other agreement between the purchaser and supplier requires taking into account the variability between shipping cartons and between zippers in a container to provide a sampling plan with a meaningful producer's risk, consumer's risk, acceptable quality level, and limiting quality level.

6.2 *Laboratory Sample and Test Specimens*—As a laboratory sample for acceptance testing, take a number of zippers specified in Section 6 at random from each container in the lot sample. Consider the zippers as both the laboratory sample and the test specimens.

7. Number of Specimens

7.1 *Variables*—Take a number of zippers per individual container from each shipping carton such that the user may expect at the 90 % probability level that the test result for an individual container is no more than 10 % of the average above or below the true average for the individual container. Determine the number of zippers per individual container as follows:

7.1.1 *Reliable Estimate of v*—When there is a reliable estimate of v based upon extensive past records for similar materials tested in the users laboratory as directed in the method, calculate the number of specimens using Eq 1:

$$n = (t^2 \times v^2)/A^2 = 0.0270 \times v^2 \quad (1)$$

where:

n = number of specimens (rounded upward to a whole number),
v = reliable estimate of the coefficient of variation of individual observations on similar materials in the users laboratory under conditions of single-operator precision,
t = 1.645, the value of student's t for infinite degrees of freedom, for two-sided limits, and a 90 % probability level ($t^2 = 2.706$),
A = 10.0 % of the average, the value of the allowable variation, and
0.0270 = value calculated from t^2/A^2.

7.1.2 *No Reliable Estimate of v*—When there is no reliable estimate of v for the users laboratory, Eq 1 should not be used directly. Instead, specify the fixed numbers of specimens shown in Table 1. These numbers of specimens are calculated using values of v which are listed in Table 1 and which are somewhat larger values of v than are usually found in practice. When a reliable estimate of v for the users laboratory becomes available, Eq 1 will usually require fewer specimens than are listed in Table 1.

7.2 *Attribute Properties*—Unless otherwise agreed upon, as when specified in an applicable material specification, take the fixed number of 20 specimens for detecting slider movement with the pin partially seated or not seated.

TABLE 1 Specimens Required Under Conditions of Unknown Variability in User's Laboratory, Percent of the Average

Names of the Properties	Number of Specimens	Basis[A]
Sticking at top stops	47	ν = 41.3
Sticking at bottom stops	32	ν = 34.4
Opening zipper	15	ν = 23.4
Closing zipper	27	ν = 31.1
Force to move slider, pin fully seated	43	ν = 39.5

[A] The values of ν in Table 1 are somewhat larger than will usually be found in practice (see 7.1.2).

8. Test Specimen

8.1 Each test specimen shall consist of a completely assembled zipper, except that for the opening and closing method, a length of chain with an appropriate slider may be used. Use a zipper or chain not less than 150 mm (6 in.) long.

9. Conditioning

9.1 Specimens to be tested by the use of these methods need no special conditioning. Testing may be conducted under prevailing room conditions.

STICKING OF ZIPPERS AT STOPS

10. Summary of Test Method

10.1 The slider is pulled against the stops with a prescribed force after which the force required to move the slider away from the stops is determined.

11. Significance and Use

11.1 The slider should move away from the stops readily. The force required to move the slider is, therefore, a measurement of the serviceability of the zipper in end use applications.

12. Procedure

12.1 *Top Stop:*

12.1.1 Disengage any interfering slider-locking elements. Secure the bottom tape ends of the completely assembled and open zipper in the clamp of the force indicator as shown in 1. Locate the clamp edge approximately 10 mm (⅜ in.) from the outermost edge of the bottom stop. With the force indicator set at zero, hold the pull of the slider in a horizontal plane and move the slider manually downward in a vertical plane against or over the top stops until a force of 18 N (4 lbf) is registered on the force indicator. Remove the specimen from the indicator clamps.

12.1.2 Secure the top tape ends of the completely assembled and closed zipper in the clamp of the force indicator. Locate the clamp jaws 10 mm (⅜ in.) from the outermost component. The tape ends must touch each other at the point of clamping.

12.1.3 Set the force indicator hand at zero. Hold the pull of the slider in a horizontal plane and move the slider manually downward in a vertical plane until it is clear of the top stops. Record the maximum reading on the force indicator to the nearest 0.5 N or 0.1 lbf.

12.2 *Bottom Stop:*

12.2.1 With the tape ends clamped as shown in Fig. 2, set the force indicator at zero. Move the slider downward in a vertical plane until it is against or over the bottom stop and until a force of 18 N (4 lbf) is registered on the force indicator.

12.2.2 Without disturbing the slider, secure the bottom tape ends of the specimen in the clamp of the force indicator (see Fig. 1) approximately 10 mm (⅜ in.) from the outermost edge of the bottom stop. Hold the pull of the slider in a horizontal plane and move the slider manually downward in a vertical plane until it is clear of the bottom stop. Note and record the maximum reading on the force indicator to the nearest 0.5 N or 0.1 lbf.

13. Report

13.1 State that the specimens were tested as directed in Sections 10 – 13 of ASTM Test Methods D2062. Describe the material(s) or product(s) sampled and the method of sampling used.

13.2 Report the following information:

13.2.1 Specific property measured, that is, "sticking at top stops", or "sticking at bottom stops,"

13.2.2 Observed maximum force required to move the slider from the top stops or from the bottom stops for each specimen tested, and

13.2.3 Number of specimens tested.

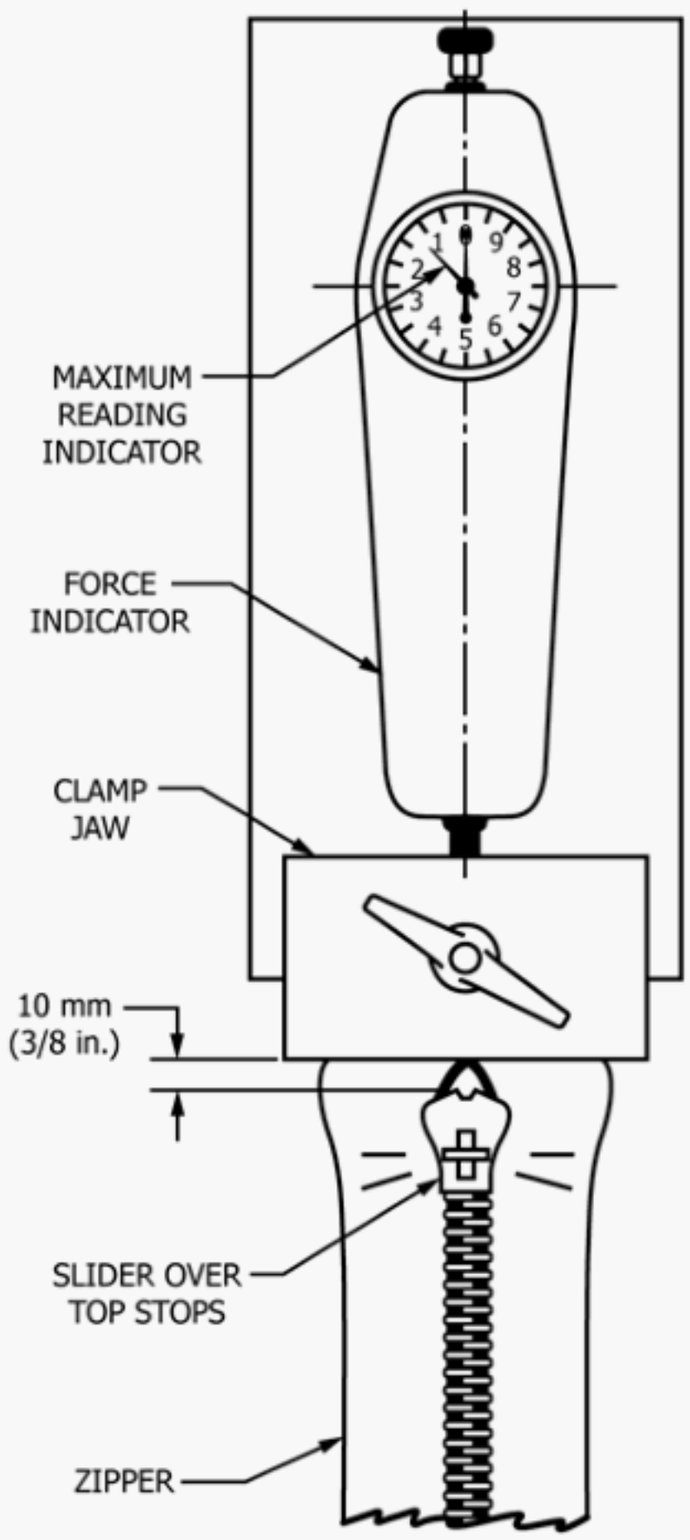

FIG. 2 Slider Sticking on Top Stops

OPENING AND CLOSING OF ZIPPERS

14. Summary of Test Method

14.1 Using a force indicator, the slider is pulled along the zipper chain alternately in the opening and closing directions and the force required to maintain each movement is recorded.

15. Significance and Use

15.1 The force required to move the slider on the chain is a measure of the ease with which the zipper will operate in end use applications.

16. Procedure

16.1 *Opening:*

16.1.1 Disengage all slider locks from the chain, except on automatic locking sliders. Secure the top end of the completely assembled and closed zipper or chain in the clamp of the force indicator (see Fig. 3) so that the outermost edge of the outermost top stop is approximately 10 mm (⅜ in.) from the edge of the clamp. Hold the pull of the slider in a horizontal plane and move the slider downward manually to a position approximately 12 mm (0.5 in.) away from the top stops as shown in Fig. 3.

16.1.2 In the case of a chain specimen, separate a portion of the chain above the slider and secure it in the force indicator clamp with the elements touching. Position the slider so that its top is approximately 25 mm (1 in.) below the bottom edges of the clamp.

16.1.3 Set the force indicator at zero. Holding the pull of the slider in a horizontal position, manually move the slider downward in a vertical plane at a uniform rate for a distance of about 125 mm (5 in.) in approximately 3 s. Take care that the slider does not strike the bottom stop. Record the maximum force registered by the force indicator to the nearest 0.5 N or 0.1 lbf.

16.2 *Closing*—Proceed as directed in 16.1, except secure the bottom tape ends in the force indicator clamps (see Fig. 4). In the case of a chain specimen, it is not necessary to separate the chain below the slider before clamping.

17. Report

17.1 State that the specimens were tested as directed in Sections 14 – 17 of ASTM Test Methods D2062. Describe the material(s) or product(s) sampled and the method of sampling used.

17.2 Report the following information:

17.2.1 Specific property measured, that is, to open and to close the zipper,

17.2.2 Maximum forces required for opening zipper and for closing zipper for each specimen tested, and

17.2.3 Number of specimens tested.

SEPARATOR FUNCTIONING OF ZIPPERS

18. Summary of Test Method

18.1 The slider, chain, and separable unit are placed in various relationships to each other and the force required to move the slider is determined with the aid of a force indicator.

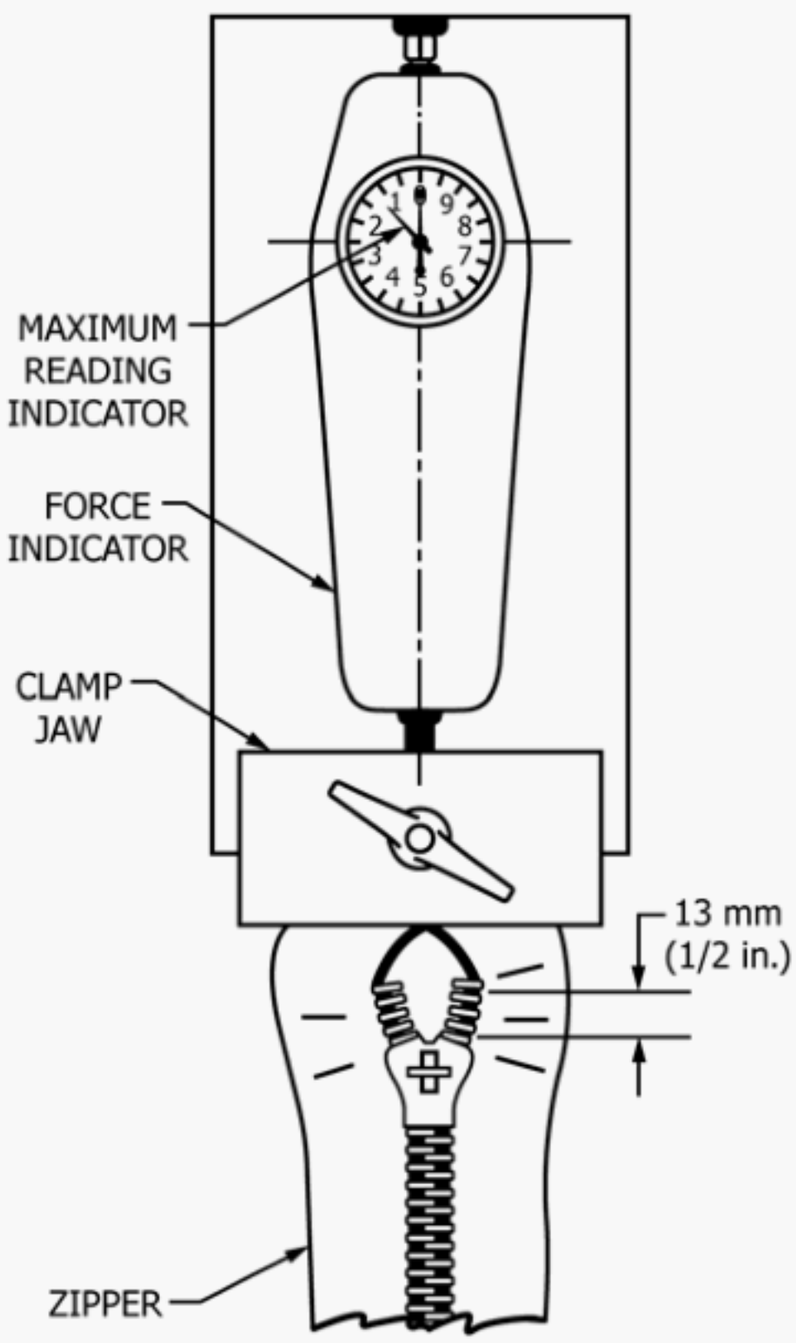

FIG. 3 Chain Opening

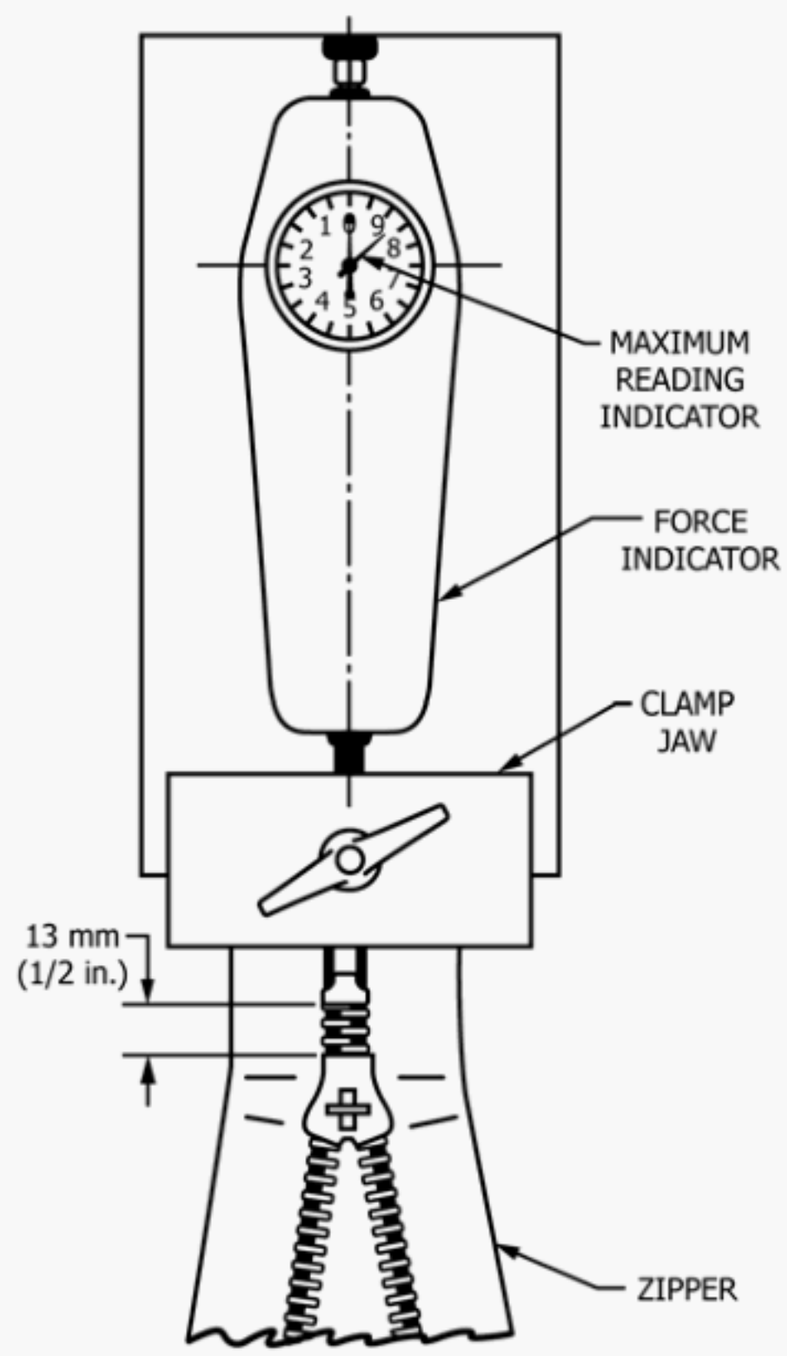

FIG. 4 Chain Closing

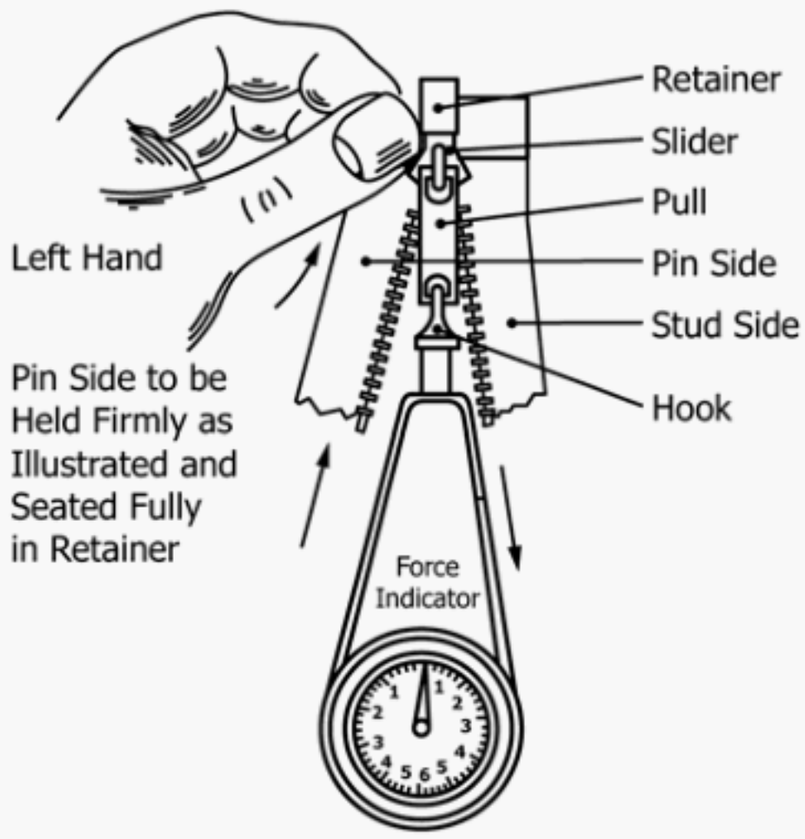

FIG. 5 Pin Fully Seated in Retainer

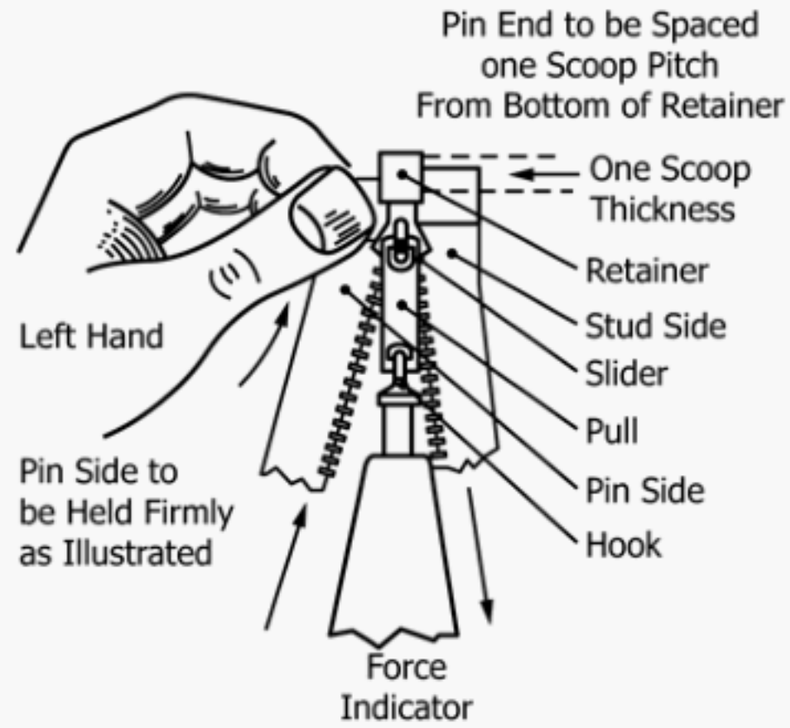

FIG. 6 Pin Not Fully Inserted in Retainer

19. Significance and Use

19.1 The slider should be capable of starting to close the zipper at the separator unit only when the pin is properly seated in the retainer. If the slider can close the zipper when the pin is not properly seated, the zipper is poorly designed or assembled and is subject to failure in the end product.

20. Procedure

20.1 *Force to Move Slider, Pin Fully Seated*—Separate the two stringers of the zipper specimen. Hold the stringer to which the retainer is attached in a vertical position (with the right hand). Place the slider in the normal position abutting the retainer (with the left hand) as shown in Fig. 5. Insert the pin through the slider throat and hold it in the fully-seated position. Attach the force indicator to the pull of the slider as shown in Fig. 5. Apply force to the slider in the closing direction until the slider clears the separable unit. Record the maximum reading on the force indicator to the nearest 0.5 N or 0.1 lbf.

20.2 *Slider Movement, Pin Partially Seated*—Separate the specimen into its two stringers. Hold the stringer to which the retainer is attached in a vertical position with the right hand. Place the slider in the normal position abutting the retainer. Place a spacer having a thickness equivalent to the element pitch of the zipper being tested in the bottom of the pin cavity of the retainer. Insert the pin through the throat of the slider and hold it with the left hand in the fully-seated position against the spacer as shown in Fig. 6. Attach the force indicator to the slider pull as shown in Fig. 6. Apply a force not to exceed the amount agreed upon by the purchaser and the seller to the slider in the closing direction. If closing occurs, note and record the maximum force required to the nearest 0.5 N or 0.1 lbf.

20.3 *Slider Movement, Pin Not Seated*—Separate the two stringers of the specimen. Hold the stringer to which the retainer is attached in a vertical position with the right hand. Place the slider approximately 50 mm (2 in.) below the retainer as shown in Fig. 7. Insert the pin into the throat of the slider until the pin is abutted against the element pitch in the slider. Hold the pin end firmly with the left hand as shown in Fig. 7 and, using the force indicator, apply a force not to exceed the amount agreed upon by the purchaser and the seller to the slider in the closing direction. If closing occurs, record the maximum force required to the nearest 0.5 N or 0.1 lbf.

21. Report

21.1 State that the specimens were tested as directed in Sections 18 – 22 of ASTM Test Methods D2062. Describe the material(s) or product(s) sampled and the method of sampling used.

21.2 Report the following information:

21.2.1 Specify property measured, that is, force to move slider, pin fully seated, slider movement, pin partially seated or slider movement, pin not seated,

21.2.2 Force applied on each specimen and whether or not slider movement occurred, and

21.2.3 Number of specimens tested.

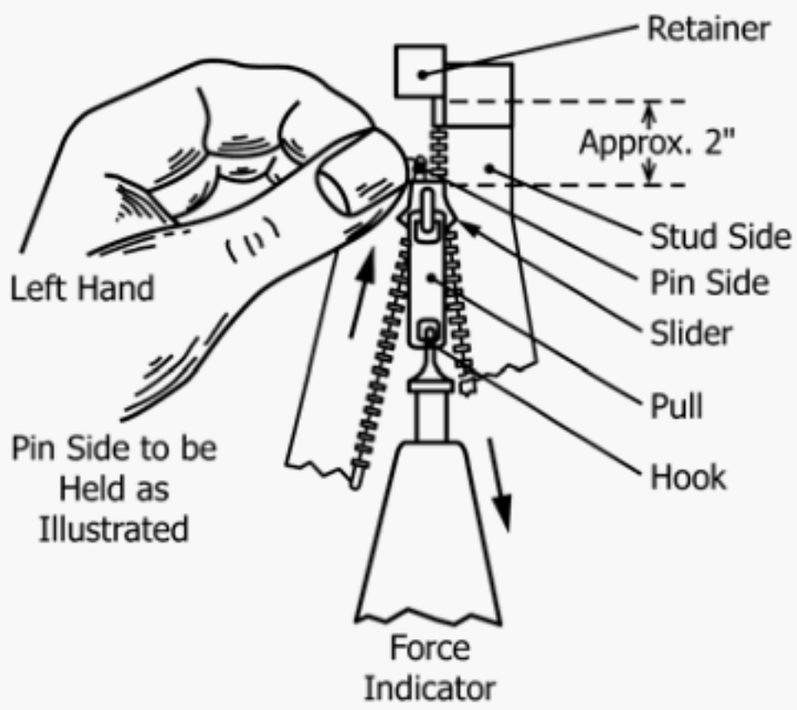

FIG. 7 Pin Not in Retainer

TABLE 2 Components of Variance as Coefficients of Variation, Percent of the Average

Names of the Properties	Single-Operator Component	Within-Laboratory Component	Between-Laboratory Component
Sticking at top stops	29.5	19.9	32.6
Sticking at bottom stops	24.6	12.7	13.4
Opening zipper	16.7	0.000	0.000
Closing zipper	22.2	23.4	32.6
Force to move slider, pin fully seated	28.2	0.000	0.000

TABLE 3 Critical Differences,[A,B,C] Percent of the Grand Average, for the Conditions Noted

Names of Properties	Number of Observations in Each Average	Single-Operator Precision	Within-Laboratory Precision	Between-Laboratory Precision
Sticking at top stops	5	30.7	55.5	93.9
	10	21.7	51.0	91.4
	20	15.3	48.7	90.1
	40	10.8	47.5	89.4
Sticking at bottom stops	5	25.5	39.1	50.0
	10	18.1	34.7	46.6
	20	12.8	32.3	44.9
	40	9.03	31.0	43.9
Opening zipper	5	17.4	17.4	17.4
	10	12.3	12.3	12.3
	20	8.68	8.68	8.68
	40	6.14	6.14	6.14
Closing zipper	5	23.1	59.1	96.1
	10	16.4	56.8	94.7
	20	11.6	55.6	94.0
	40	8.18	55.0	93.6
Force to move slider, pin fully seated	5	29.4	29.4	29.4
	10	20.8	20.8	20.8
	20	14.7	14.7	14.7
	40	10.4	10.4	10.4

[A] The critical differences were calculated using $t = 1.645$, which is based on infinite degrees of freedom.
[B] To convert the tabulated values of the critical differences to units of measure, multiply the average of the two specific sets of data being compared by the critical differences expressed as decimal fractions.
[C] Since the interlaboratory tests included only four laboratories, between-laboratory precision data should be used with special caution.

22. Precision and Bias

22.1 *Interlaboratory Test Data*[4]—An interlaboratory test was run in 1970 in which samples of two materials were tested in each of four laboratories. Each laboratory used two operators, each of whom tested eight specimens of each material. The components of variance expressed as coefficients of variations were calculated to be the values listed in Table 2.

NOTE 2—When the pin is not fully seated in the retainer or is not seated in the retainer, the movement of the slider under a specified load constitutes a failure of the specimen to conform. Such an observation is an attribute and no justifiable statement on precision or bias may be made about observations of this type.

NOTE 3—All of the within-laboratory component is attributable to variations in observations by the same operator obtained on different days.

22.2 *Precision*—For the components of variance listed in Table 2, two averages of observed values should be considered significantly different at the 90 % probability level if the difference equals or exceeds the critical differences tabulated in Table 3.

NOTE 4—The tabulated values of the critical differences should be considered to be a general statement, particularly with respect to between-laboratory precision. Before a meaningful statement can be made about two specific laboratories, the amount of statistical bias, if any, between them must be established, with each comparison being based on recent data obtained on randomized specimens from one sample of the material to be tested.

22.3 *Bias*—The procedures in Test Methods D2062 for testing the properties listed in Tables 2 and 3 are free from any known bias (see Note 2).

23. Keywords

23.1 operability; zipper

[4] Supporting data have been filed at ASTM International Headquarters and may be obtained by requesting Research Report RR:D13-1035. Contact ASTM Customer Service at service@astm.org.

ASTM International takes no position respecting the validity of any patent rights asserted in connection with any item mentioned in this standard. Users of this standard are expressly advised that determination of the validity of any such patent rights, and the risk of infringement of such rights, are entirely their own responsibility.

This standard is subject to revision at any time by the responsible technical committee and must be reviewed every five years and if not revised, either reapproved or withdrawn. Your comments are invited either for revision of this standard or for additional standards and should be addressed to ASTM International Headquarters. Your comments will receive careful consideration at a meeting of the responsible technical committee, which you may attend. If you feel that your comments have not received a fair hearing you should make your views known to the ASTM Committee on Standards, at the address shown below.

This standard is copyrighted by ASTM International, 100 Barr Harbor Drive, PO Box C700, West Conshohocken, PA 19428-2959, United States. Individual reprints (single or multiple copies) of this standard may be obtained by contacting ASTM at the above address or at 610-832-9585 (phone), 610-832-9555 (fax), or service@astm.org (e-mail); or through the ASTM website (www.astm.org). Permission rights to photocopy the standard may also be secured from the Copyright Clearance Center, 222 Rosewood Drive, Danvers, MA 01923, Tel: (978) 646-2600; http://www.copyright.com/