This international standard was developed in accordance with internationally recognized principles on standardization established in the Decision on Principles for the Development of International Standards, Guides and Recommendations issued by the World Trade Organization Technical Barriers to Trade (TBT) Committee.

Designation: D6075 – 13 (Reapproved 2020)

# Standard Test Method for Cracking Resistance of Leather[1]

This standard is issued under the fixed designation D6075; the number immediately following the designation indicates the year of original adoption or, in the case of revision, the year of last revision. A number in parentheses indicates the year of last reapproval. A superscript epsilon (ε) indicates an editorial change since the last revision or reapproval.

*This standard has been approved for use by agencies of the U.S. Department of Defense.*

## 1. Scope

1.1 This test method covers the determination of the resistance of leather to cracking when the leather is bent or folded with the grain (or finish) surface on the outside of the bend. Heavy leathers (for example, harness, belt, strap, bag, case, and so forth) are usually bent around a mandrel using either mechanical resistance (for example, clamp, vise, and so forth) or by hand. Lighter leathers (for example, shoe upper, upholstery, garment, glove, and so forth) are usually given a sharp double-fold (crosswise) bend after cooling to a low temperature. This test method does not apply to wet blue.

1.2 The values stated in SI units are to be regarded as the standard. The values given in parentheses are for information only.

1.3 *This standard does not purport to address all of the safety concerns, if any, associated with its use. It is the responsibility of the user of this standard to establish appropriate safety, health, and environmental practices and determine the applicability of regulatory limitations prior to use.*

1.4 *This international standard was developed in accordance with internationally recognized principles on standardization established in the Decision on Principles for the Development of International Standards, Guides and Recommendations issued by the World Trade Organization Technical Barriers to Trade (TBT) Committee.*

## 2. Referenced Documents

2.1 *ASTM Standards:*[2]

D1517 Terminology Relating to Leather

D1610 Practice for Conditioning Leather and Leather Products for Testing

D1813 Test Method for Measuring Thickness of Leather Test Specimens

## 3. Terminology

3.1 For definitions of general leather terms used in this test method, refer to Terminology D1517.

3.2 *Definitions:*

3.2.1 *finish cracking*—the appearance of cracks (that is, ruptures) in the finish of leather which may extend through the finish layer to the surface of the crust leather or deeper.

3.2.2 *grain cracking*—the appearance of cracks (that is, ruptures of the grain enamel) on the grain surface of the leather which may even extend deeper into the leather cross section.

## 4. Summary of Test Method

4.1 A specimen of leather is conditioned and then bent by one of three procedures. The grain (or finish) surface of the bent specimen is then examined for the appearance of any cracks or ruptures in the area around the bend.

4.1.1 One bending procedure for heavier leathers involves a mandrel rod, a metal bar with thickness equal to the diameter of the mandrel, and a large clamp or vise to force and hold the leather in the bent configuration around the mandrel with the metal bar placed between the flesh surfaces of the bent leather.

4.1.2 A second bending procedure for heavier leathers involves bending the leather around a mandrel by hand and forcing and holding the leather so the flesh surfaces of the bent leather are in contact.

4.1.3 A third bending procedure for lighter leathers involves cooling the leather specimen and then creating a sharp double (crosswise) fold while the specimen remains in the cold chamber.

## 5. Significance and Use

5.1 This test method is designed to determine the cracking resistance of the grain or finish surface of leather on a pass/fail basis. This test method attempts to replicate the conditions that may be encountered by leather that is bent around a buckle frame or other anchoring device, folded over in seams or welts, and so forth. The cracking resistance of leather is influenced by

[1] This test method is under the jurisdiction of ASTM Committee D31 on Leather and is the direct responsibility of Subcommittee D31.01 on Vegetable Leather. This test method is a combination of three methods (that is, Methods 4011, 4021, and 7211) that were part of Federal Test Method Standard No. 311. This test method was developed in cooperation with the U.S. Defense Personnel Support Center, Directorate of Clothing and Textiles, Philadelphia, PA and the U.S. Army Natick Research, Development and Engineering Center Natick, MA.

Current edition approved Dec. 1, 2020. Published December 2020. Originally approved in 1997. Last previous edition approved in 2013 as D6075 – 00 (2013). DOI: 10.1520/D6075-13R20.

[2] For referenced ASTM standards, visit the ASTM website, www.astm.org, or contact ASTM Customer Service at service@astm.org. For *Annual Book of ASTM Standards* volume information, refer to the standard's Document Summary page on the ASTM website.

Copyright © ASTM International, 100 Barr Harbor Drive, PO Box C700, West Conshohocken, PA 19428-2959. United States

many factors such as quantity, location, and type of fatliquoring materials; moisture content; thickness; the presence of defects or scar tissue, or both; the presence of processing damages to the skin or hide tissue; finish system formulation, and so forth. This test method is useful for manufacturing control in the tannery, specification acceptance, and quality control in the end product manufacturing plant.

## 6. Apparatus

6.1 *Vise or Clamp,* shall have plain (that is, smooth and not knurled or roughened) jaws not less than 7 cm (2¾ in.) wide.

6.2 *Mandrel,* shall be a rod approximately 15 cm (6 in.) in length and shall have a diameter as specified in the material specification.

6.3 *Metal Bar,* shall be approximately 15 cm (6 in.) in length, 1.9 cm (¾ in.) in width, and shall have a thickness equal to the diameter of the mandrel as specified in the material specification.

6.4 *Low-temperature Chamber,* shall be capable of maintaining the required temperature (usually 0°C) to within ± 1°C and equipped so as to permit insertion of hands to hold and manipulate the leather specimen within the chamber.

## 7. Test Specimens

7.1 The test specimen for bending around a mandrel shall be 150 mm (6 in.) long by 25 mm (1 in.) wide. The direction of the long dimension relative to the backbone shall be noted.

7.2 The test specimen for low-temperature double-folding shall be 50 ± 2 mm (2 ± 0.08 in.) square.

7.3 All test specimens shall be free from mechanical damage and defects.

## 8. Conditioning

8.1 Condition all specimens in accordance with Practice D1610. Conditioning other than that prescribed shall be noted in the results.

## 9. Procedure

9.1 Determine the thickness of the specimen (in the area that will be bent) to the nearest 0.025 mm (0.001 in.). See Test Method D1813.

9.2 *Vise- or Clamp-aided Bending*—Bend the specimen into a loop with the grain or finish side of the leather out. Place the mandrel of the specified diameter in the loop of the specimen. Place the metal bar having a thickness equal to the diameter of the mandrel on top of the mandrel. Place the whole assembly in the vise with the loop downward as illustrated in Fig. 1. Bend the specimen around the mandrel and against the bar by slowly closing the vise jaws until the mandrel and bar cannot be moved by hand. Examine the grain or finish side of the specimen for cracks in the area around the bend.

9.3 *Hand Bending*—Bend the specimen slowly by hand over a mandrel of the specified diameter. Make the bend through an angle of 180° with the grain or finish side of the leather out. Examine the grain or finish side of the specimen for cracks in the area around the bend.

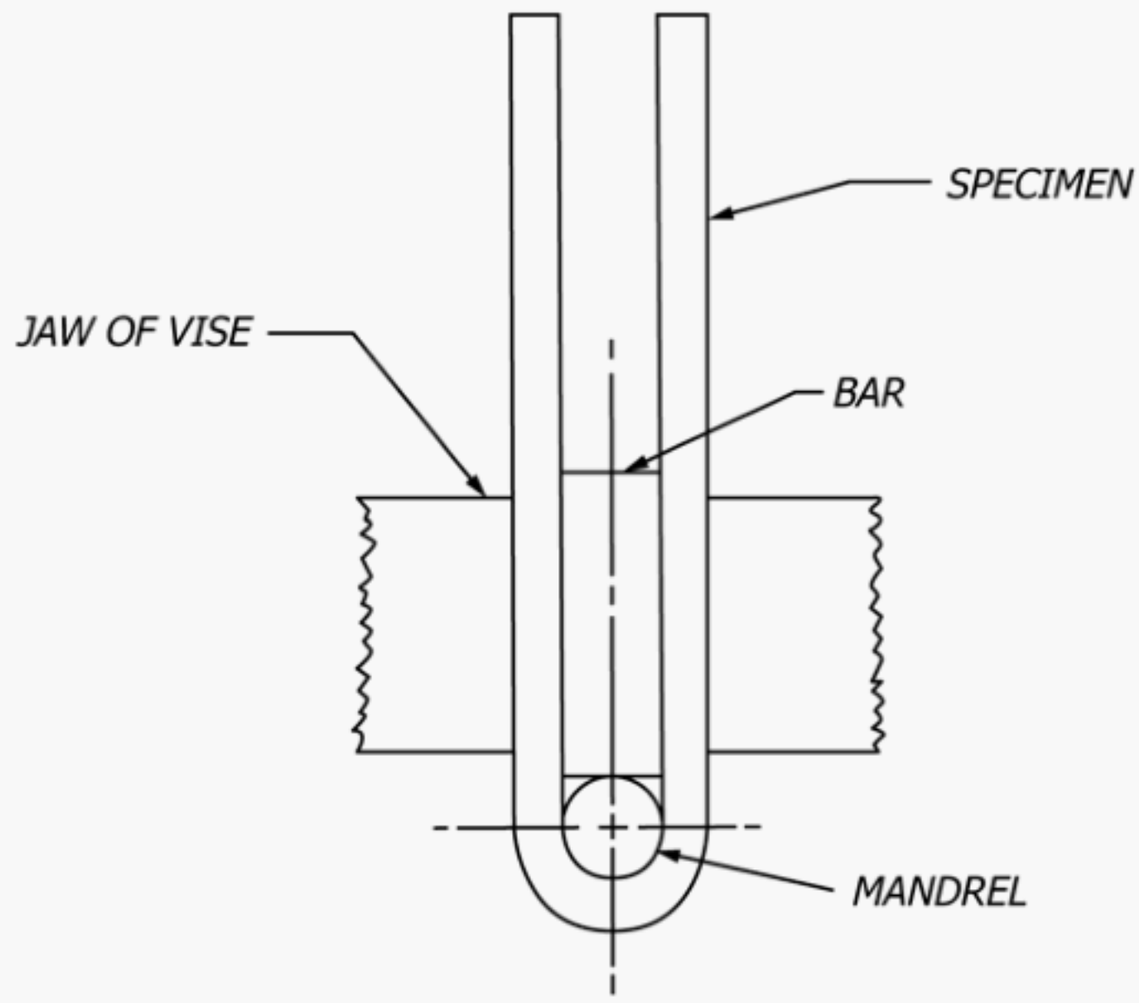


**FIG. 1 Leather Specimen Bent in Vise**

9.4 *Low-temperature Bending:*

9.4.1 Expose the conditioned specimen to a temperature of 0 ± 1°C for a period of 2 h ± 5 min, and then test at that temperature. A testing temperature different than that prescribed shall be noted in the reported results.

9.4.2 Place the specimen in the low-temperature chamber and maintain at the required temperature for the required period of time. While remaining in the cold chamber at the specified temperature, fold the specimen crosswise sharply upon itself with the grain or finish surface of the leather facing out. Then remove the folded specimen from the cold chamber and examine for cracks in the area around the double-fold bend.

## 10. Report

10.1 Report the following information:

10.1.1 The presence or absence of any cracks in the specimen,

10.1.2 The thickness of the leather specimen,

10.1.3 If appropriate, the direction of the long dimension of the specimen relative to the backbone,

10.1.4 If a mandrel was used, the diameter of the mandrel, and

10.1.5 If a low-temperature chamber was used, the temperature at which the specimen was tested.

## 11. Precision and Bias

11.1 This test method is adopted from the Federal Test Method Standard No. 311, Methods 4011, 4021, and 7211. These methods have long been in use and were approved for publication before the inclusion of precision and bias statements was mandated. The user is cautioned to verify by the use of reference materials, if available, that the precision and bias (or reproducibility) of this test method is adequate for the contemplated use.

## 12. Keywords

12.1 cracking; cracking resistance; finish cracking; grain cracking; leather; leather cracking

*ASTM International takes no position respecting the validity of any patent rights asserted in connection with any item mentioned in this standard. Users of this standard are expressly advised that determination of the validity of any such patent rights, and the risk of infringement of such rights, are entirely their own responsibility.*

*This standard is subject to revision at any time by the responsible technical committee and must be reviewed every five years and if not revised, either reapproved or withdrawn. Your comments are invited either for revision of this standard or for additional standards and should be addressed to ASTM International Headquarters. Your comments will receive careful consideration at a meeting of the responsible technical committee, which you may attend. If you feel that your comments have not received a fair hearing you should make your views known to the ASTM Committee on Standards, at the address shown below.*

*This standard is copyrighted by ASTM International, 100 Barr Harbor Drive, PO Box C700, West Conshohocken, PA 19428-2959, United States. Individual reprints (single or multiple copies) of this standard may be obtained by contacting ASTM at the above address or at 610-832-9585 (phone), 610-832-9555 (fax), or service@astm.org (e-mail); or through the ASTM website (www.astm.org). Permission rights to photocopy the standard may also be secured from the Copyright Clearance Center, 222 Rosewood Drive, Danvers, MA 01923, Tel: (978) 646-2600; http://www.copyright.com/*