This international standard was developed in accordance with internationally recognized principles on standardization established in the Decision on Principles for the Development of International Standards, Guides and Recommendations issued by the World Trade Organization Technical Barriers to Trade (TBT) Committee.

Designation: D6574/D6574M – 13 (Reapproved 2021)

Standard Test Method for Determining the (In-Plane) Hydraulic Transmissivity of a Geosynthetic by Radial Flow[1]

This standard is issued under the fixed designation D6574/D6574M; the number immediately following the designation indicates the year of original adoption or, in the case of revision, the year of last revision. A number in parentheses indicates the year of last reapproval. A superscript epsilon (ε) indicates an editorial change since the last revision or reapproval.

1. Scope

1.1 This test method covers the procedure for determining the in-plane transmissivity of geosynthetics under varying normal compressive stresses using a radial flow apparatus. The test is intended to be an index test used primarily for geotextiles, although other products composed of geotextiles and geotextile-type materials may be suitable for testing with this test method.

1.2 This test method is based on the assumption that the transmissivity of the geosynthetic is independent of orientation of the flow and is, therefore, limited to geosynthetics that have similar transmissivity in all directions and should not be used for materials with oriented flow behavior.

1.3 This test method has been developed specifically for geosynthetics that have transmissivity values on the order of or less than 2×10^{-4} m^2/s. Consider using Test Method D4716/D4716M for geosynthetics with transmissivity values higher than 2×10^{-4} m^2/s.

1.4 The values stated in either SI units or inch-pound units are to be regarded separately as standard. The values stated in each system may not be exact equivalents; therefore, each system shall be used independently of the other. Combining values from the two systems may result in nonconformance with the standard.

1.5 *This standard does not purport to address all of the safety concerns, if any, associated with its use. It is the responsibility of the user of this standard to establish appropriate safety, health, and environmental practices and determine the applicability of regulatory limitations prior to use.*

1.6 *This international standard was developed in accordance with internationally recognized principles on standardization established in the Decision on Principles for the Development of International Standards, Guides and Recommendations issued by the World Trade Organization Technical Barriers to Trade (TBT) Committee.*

2. Referenced Documents

2.1 *ASTM Standards:*[2]

D4354 Practice for Sampling of Geosynthetics and Rolled Erosion Control Products (RECPs) for Testing

D4439 Terminology for Geosynthetics

D4716/D4716M Test Method for Determining the (In-plane) Flow Rate per Unit Width and Hydraulic Transmissivity of a Geosynthetic Using a Constant Head

D5092/D5092M Practice for Design and Installation of Groundwater Monitoring Wells

3. Terminology

3.1 For definitions of terms relating to geosynthetics, refer to Terminology D4439.

3.2 *Definitions:*

3.2.1 *geosynthetic, n*—a planar product manufactured from polymeric material used with soil, rock, earth, or other geotechnical engineering related material as an integral part of a man-made project, structure, or system. **D4439**

3.2.2 *geotextile, n*—a permeable geosynthetic comprised solely of textiles. **D4439**

3.2.3 *gravity flow, n*—flow in a direction parallel to the plane of a geosynthetic driven predominantly by a difference in elevation between the inlet and outflow points of a specimen. **D4439**

3.2.3.1 *Discussion*—The pressure at the outflow is considered to be atmospheric.

3.2.4 *head (static), n*—the height above a standard datum of the surface of a column of water (or other liquid) that can be supported by a static pressure at a given point. The static head is the sum of the elevation head and the pressure head. **D5092/D5092M**

3.2.5 *hydraulic gradient, i, s (D), n*—the loss of hydraulic head per unit distance of flow, dH/dL. **D4439**

3.2.5.1 *Discussion*—The gradient is not constant from point to point in the direction of flow in the radial flow test. The

[1] This test method is under the jurisdiction of ASTM Committee D35 on Geosynthetics and is the direct responsibility of Subcommittee D35.03 on Permeability and Filtration.

Current edition approved May 1, 2021. Published May 2021. Originally approved in 2000. Last previous edition approved in 2013 as D6574/D6574M – 13. DOI: 10.1520/D6574_D6574M-13R21.

[2] For referenced ASTM standards, visit the ASTM website, www.astm.org, or contact ASTM Customer Service at service@astm.org. For *Annual Book of ASTM Standards* volume information, refer to the standard's Document Summary page on the ASTM website.

Copyright © ASTM International, 100 Barr Harbor Drive, PO Box C700, West Conshohocken, PA 19428-2959. United States

gradient (mathematically) varies with the inverse of the radial distance from the center.

3.2.6 *hydraulic transmissivity, θ (L^2 T^{-1}), n*—for a geosynthetic, the volumetric flow rate per unit width of specimen per unit gradient in a direction parallel to the plane of the specimen. **D4439**

3.2.6.1 *Discussion*—Transmissivity is technically applicable only to saturated laminar flow hydraulic conditions.

3.2.7 *index test, n*—a test procedure which may contain a known bias but which may be used to establish an order for a set of specimens with respect to the property of interest. **D4439**

3.2.8 *in-plane flow, n*—fluid flow confined to a direction parallel to the plane of a geosynthetic. **D4439**

3.2.9 *laminar flow, n*—flow in which the head loss is proportional to the first power of the velocity. **D4439**

3.2.10 *normal stress, (FL^{-2}), n*—the component of applied stress that is perpendicular to the surface on which the force acts. **D4439**

3.2.11 *turbulent flow, n*—that type of flow in which any water particle may move in any direction with respect to any other particle and in which the head loss is approximately proportional to the second power of the velocity. **D4439**

3.3 *Definitions of Terms Specific to This Standard:*

3.3.1 *steady flow, n*—hydraulic flow conditions that do not vary with time at any given point.

3.3.2 *uniform flow, n*—hydraulic flow conditions where the cross-sectional area and the mean velocity in the direction of flow are constant from point to point.

4. Summary of Test Method

4.1 The transmissivity is determined using a device which transmits the flow of water radially outward from the center of a torus-shaped test specimen. The test method is performed with a constant head under a specific normal stress selected by the user and may be repeated using several gradients and under increasing normal stresses.

4.2 The material property "hydraulic transmissivity" is technically applicable only to the regions of tests where the flow rate is constant with gradient, that is, the laminar region of the tests.

4.3 In the constant head radial flow test, the flow regime is characterized as nonuniform steady flow since the cross-sectional flow area and the hydraulic gradient vary from point to point along any radial flow line while remaining constant with time.

5. Significance and Use

5.1 This test method is an index test to estimate and compare the in-plane hydraulic transmissivity of one or several candidate geosynthetics under specific gradient and stress conditions.

5.2 This test method may be used for acceptance testing of commercial shipments of geosynthetics, but caution is advised since information about between-laboratory precision is incomplete. Comparative tests as directed in 5.2.1 are advisable.

5.2.1 In case of a dispute arising from differences in reported test results when using this procedure for acceptance of commercial shipments, the purchaser and the supplier should first confirm that the tests have been conducted using comparable test parameters including specimen conditioning, normal stress, hydraulic system gradient, etc. Comparative tests then should be conducted to determine if there is a statistical bias between their laboratories. Competent statistical assistance is recommended for the investigation of bias. As a minimum, the two parties should take a group of test specimens that are as homogeneous as possible and that are formed from a lot of the material in question. The test specimens should be assigned randomly to each laboratory for testing. The average results from the two laboratories should be compared using the Student's *t*-test for unpaired data and an acceptable probability level chosen by the two parties before testing is begun. If bias is found, either its cause must be found and corrected or the purchaser and supplier must agree to interpret future test results in light of the known bias.

6. Apparatus

6.1 A schematic drawing of a typical constant head assembly is shown in Fig. 1. The individual components and accessories are as follows:

6.1.1 *Base*—The bottom section of the apparatus should be constructed of a sturdy metal or plastic plate with a smooth, flat contact surface. The center inlet hole shall be 50 mm [2 in]. The outside dimension of the base must match or exceed the outside diameter of the test specimen. A manometer tap should be located in the sidewall of the inlet opening.

6.1.2 *Perimeter Containment/Outlet Weir*—A perimeter ring concentric with the outside diameter of the test specimen with sufficient height to contain the tail water, such that the specimen remains submerged under water at all times during the test. The containment ring should double as the overflow weir, with a beveled edge around the perimeter, with an outer concentric collection trough for collection of the overflow. Alternatively, the containment ring may include a rectangular overflow weir at one location in the ring that is at least 2.5 cm wide with a beveled overflow plate.

6.1.3 *Loading Platen*—A sturdy circular metal or plastic disc with a smooth, flat contact surface. The outside diameter of the platen should be 300 mm [12 in]. The platen/specimen diameter establishes the outside diameter, Ro. The upper platen should have a spherical chamber of an outside diameter matching the outside diameter of the inlet opening to facilitate collection of any air bubbles that may collect at the specimen inlet. This chamber should be tapped at the apex to allow venting. This tap may also be connected to a manometer for measurement of the inlet head.

6.1.4 *Rubber Base and Platen Surfaces*—A rubber membrane (sheet) material of buna, butyl, or neoprene rubber 1.5 to 2.5 mm [1⁄16 to 3⁄32 in.] thick with a Shore A hardness of 50 to 80, cut to match the base and platen surfaces. The membranes must be adhered to the base and platen surfaces.

6.1.5 *Loading Mechanism*—Accurate to ±1 % of the applied loading and capable of sustaining a constant normal compressive stress on the torus-shaped specimen within ±2 %

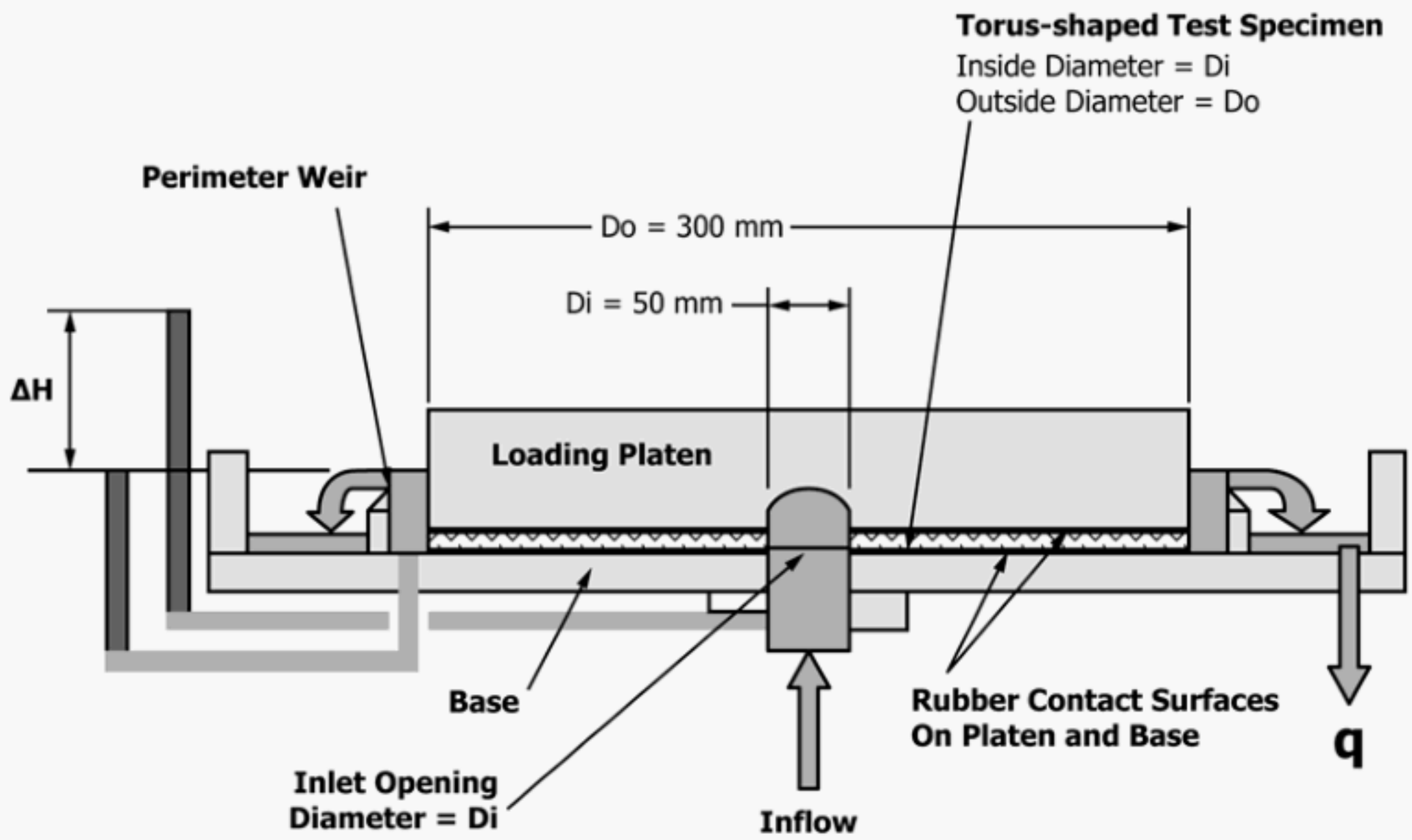

FIG. 1 A Radial Transmissivity Constant Head Testing Device

sustainable over the seating and testing period. The use of static weights, a hydraulic, or a pneumatic ram meeting the above conditions may be considered sufficient for use in this test method.

6.1.6 *Constant Head Device (CHD)*—A device typically equipped with an inlet, two outlets, and an internal overflow weir or riser. The device should be sized to sustain steady flow conditions under the flow rates involved in the testing.

6.1.6.1 Do not use the water level at the CHD to measure the inlet head. The inlet head measurement shall be with the manometer tapped directly into the inlet chamber or the platen trap.

6.1.7 *Manometers*—A manometer tap shall be installed in the perimeter containment section to measure the tail head directly and, as detailed in the above sections, within the inlet opening in the base to measure the inlet head directly. If a rectangular weir is used (see 6.1.2), the tail head tap should be located in the perimeter outflow trough at 90° to the weir location.

6.1.7.1 The influence of the meniscus tension within the manometer sight tubes on the head measurements should be checked by performing a test in accordance with this test method, then ramping the gradient back up to the maximum value (see 10.8 and 10.9). The resulting degree of hyteresis in the plot of flow rate versus gradient provides a measure of the sight tube accuracy. If the meniscus effect results in a difference in flow rate values at a given gradient of more than 5 %, the sight tube accuracy should be improved by increasing the inside diameter of the sight tubes, or by using tubes made of glass instead of plastic, or both.

6.1.8 *Flow Rate Measuring Equipment*—Equipment that results in a measurement event accuracy of ±2 % of the associated flow rate. Typically, the outflow is timed with a stopwatch accurate to 0.1 s while being collected in a convenient container and is then transferred to a 1000-mL Class A graduated cylinder.

6.1.9 *Die*—For cutting the test specimens, consisting of two concentric circular dies, the outer with a diameter of 300 mm [12 in.] and the inner with a diameter of 50 mm [2 in.].

6.1.10 *Thickness Monitoring Device (optional)*—In the form of a dial gauge and the like, accurate to 0.2 mm [0.005 in.], may be used to measure the change in the thickness of the geosynthetic specimen in the device during the test.

6.1.11 *Test Water*—The water used for testing must be de-aired and filtered. The dissolved oxygen content should not exceed 6 ppm. The filter should have a maximum rated opening size of 1-μ. The preferred test water temperature is 21 ± 2 °C and shall be adhered to in the event of interlaboratory disputes. For routine testing, maintain the test water at 21 ± 5 °C.

7. Sampling

7.1 *Lot Sample*—Divide the product into lots and for a lot to be tested take the lot sample as directed in Practice D4354.

7.2 *Laboratory Sample*—Consider the units in the lot sample as the units in the laboratory sample. For the laboratory sample, take a swatch 1 m in the machine direction by the roll width.

7.3 *Test Specimens*—Remove three specimens randomly spaced along a diagonal extending across the swatch from each laboratory sample.

7.3.1 Die cut the torus-shaped test specimens with an outside diameter (Do) of 300 mm [12 in.] and an inside diameter (Di) of 50 mm [2 in.].

7.3.2 The outside and inside diameters of the cut test specimen should be within ±2 % of the dimensions specified.

7.3.3 Examine the cut faces of the test specimen, both inner and outer diameter edges, checking for "pinching" of the fibers due to the cutting mechanism. Manually separate any pinched areas carefully, restoring the cut edge of the material to the "as received" condition.

8. Test Parameter Selection

8.1 In the absence of a gradient (or gradients) prescribed by the material specification, select a gradient from the following values: 1.0, 0.50, 0.25, and 0.10.

8.2 In the absence of normal compressive stresses prescribed by the material specification, select a normal compressive stress from the following values: 5, 10, 25, and 50 kPa [0.72, 1.45, 3.63, and 7.26 psi].

8.3 In the absence of a seating period prescribed by the material specification, use a seating period of 15 min.

9. Test Specimen Conditioning

9.1 Pre-soak the test specimens in a closed container of deaired water for a minimum of 1 h.

10. Test Procedure

10.1 Set the elevation of the CHD such that it is slightly above the outlet weir elevation, and fill the radial apparatus with de-aired water, covering the base surface.

10.2 Place a conditioned test specimen carefully on the base, laying the specimen down with a rolling motion into the water, ensuring that all wrinkles, folds, etc., are removed. Be vigilant to expell any entrapped air that is visible within or beneath the test specimen.

10.2.1 If a specific side of the geosynthetic is to be tested, place this side facing the inlet opening.

10.3 Place the loading platen with a "hinging" motion onto the specimen, keeping it centered on the base.

10.4 Open the vent port in the platen trap and increase the inflow head as warranted to expell the air out of the chamber.

10.5 Seat the specimen under the minimum normal compressive stress for the period specified. The mass required to achieve the specified compressive stress should be calculated as follows:

$$M = \sigma_c \times (\mathrm{Do}^2 - \mathrm{Di}^2) \times 80.1 \quad (1)$$

where

M = required mass, kgf
σ_c = specified compressive stress, kPa,
Do = outside diameter of the specimen, m, and
Di = inside diameter of the specimen, m.

or

$$W = \sigma_c \times (\mathrm{Do}^2 - \mathrm{Di}^2)/183 \quad (2)$$

where:

W = required weight, lbf,
σ_n = specified compressive stress, psf,
Do = outside diameter of the specimen, in., and
Di = inside diameter of the specimen, in.

10.6 Expell all air from the manometer tubing and check that the manometer levels coincide in the no-flow condition.

10.7 Initiate flow through the CHD.

10.8 Set the highest system gradient specified per the formula below. Minimize the amount of overflow in the CHD by adjusting the CHD elevation and the supply flowrate. This prevents the CHD from choking due to excessive overflow.

10.8.1 The head loss (hi-ho) required to achieve a given system gradient is calculated as follows:

$$(\mathrm{hi} - \mathrm{ho}) = i \times [(\mathrm{Do} - \mathrm{Di})/2] \quad (3)$$

where:

i = system gradient, that is, average gradient along a radial flow line,
hi = inlet head, m,
ho = outlet head, m,
Do = outside diameter of the specimen/platen, m, and
Di = diameter of inlet opening, m.

10.9 Obtain three flow rate measurements. Collect a minimum of 500 mL or 15 min of flow, whichever occurs first.

10.9.1 Compare the flow rate measurements between the three successive trials. If the values vary from the average of the three by more than 5 %, take additional readings until this requirement is satisfied.

NOTE 1—If the flow rate measurements continually reduce with time and this requirement cannot be met, the specimen may be clogging due to some attribute of the test water or the specimen may be compressing under the applied normal load. This issue should be investigated and resolved by changing or treating the test water, or lengthening the seating period before proceeding.

10.10 Decrease the gradient by lowering the CHD and repeat steps 10.8 and 10.9, continuing from highest gradient to lowest until all of the test gradients are completed.

10.11 Increase the normal load to the next highest increment and repeat the procedure outlined in 10.8 – 10.10 for each load increment until the maximum desired stress is reached.

10.12 Repeat the test procedure on the remaining two test specimens.

11. Calculation

11.1 Calculate the flow rate, mL/s, for each individual flow rate measurement.

11.2 Calculate the average flow rate as the average of the three flow rate values from 11.1 at each gradient and each load.

11.3 Determine the hydraulic transmissivity value (the test result) using the formula below:

$$\theta = (R_T\, q\, ln(\mathrm{Do}/\mathrm{Di})/(2\pi\ \mathrm{Hc})) \times 1 \times 10^{-6} \quad (4)$$

where:

TABLE 1 Corrections Factor R_T for the Viscosity of Water

Temperature °C	R_T
16	1.106
17	1.077
18	1.051
19	1.025
20	1.000
21	0.976
22	0.953
23	0.931
24	0.910
25	0.889
26	0.869

θ = transmissivity, m^2/s (to three significant digits),
R_T = temperature correction factor per Table 1,
q = average of the three measured flow rates, mL/s,
Do = outside diameter of the test specimen/platen, m,
Di = diameter of the inlet opening, m, and
Hc = constant head value (hi-ho), m.

12. Report

12.1 The report of the radial transmissivity test shall include the following information:

12.1.1 Project, type of geosynthetic(s) tested, product/sample identification, and if applicable, specific side of material tested.

12.1.2 A statement of any departures from suggested testing procedure so the results can be evaluated and used.

12.2 Complete test data shall include the following:

12.2.1 The specimen dimensions Di and Do;

12.2.2 The collection volumes and times and the calculated flow rates;

12.2.3 The head measurements (hi and ho) and the calculated system gradients;

12.2.4 The applied loads and calculated compressive stresses;

12.2.5 The calculated transmissivity values;

12.2.6 The seating period;

12.2.7 The specimen thickness (if monitored);

12.2.8 The water temperature.

12.3 (Optional) plots of the log of transmissivity versus system gradient for each compressive stress.

13. Precision and Bias

13.1 *Precision*—The precision of the procedure in this test method is being established.

13.2 *Bias*—The procedure in this test method for measuring the in-plane transmissivity of geosynthetics has no bias because the values of transmissivity can be defined only in terms of a test method.

14. Keywords

14.1 geosynthetics; hydraulic transmissivity; index tests; in-plane flows; radial transmissivity

ASTM International takes no position respecting the validity of any patent rights asserted in connection with any item mentioned in this standard. Users of this standard are expressly advised that determination of the validity of any such patent rights, and the risk of infringement of such rights, are entirely their own responsibility.

This standard is subject to revision at any time by the responsible technical committee and must be reviewed every five years and if not revised, either reapproved or withdrawn. Your comments are invited either for revision of this standard or for additional standards and should be addressed to ASTM International Headquarters. Your comments will receive careful consideration at a meeting of the responsible technical committee, which you may attend. If you feel that your comments have not received a fair hearing you should make your views known to the ASTM Committee on Standards, at the address shown below.

This standard is copyrighted by ASTM International, 100 Barr Harbor Drive, PO Box C700, West Conshohocken, PA 19428-2959, United States. Individual reprints (single or multiple copies) of this standard may be obtained by contacting ASTM at the above address or at 610-832-9585 (phone), 610-832-9555 (fax), or service@astm.org (e-mail); or through the ASTM website (www.astm.org). Permission rights to photocopy the standard may also be secured from the Copyright Clearance Center, 222 Rosewood Drive, Danvers, MA 01923, Tel: (978) 646-2600; http://www.copyright.com/