This international standard was developed in accordance with internationally recognized principles on standardization established in the Decision on Principles for the Development of International Standards, Guides and Recommendations issued by the World Trade Organization Technical Barriers to Trade (TBT) Committee.

Designation: D7236 – 16a (Reapproved 2021)

Standard Test Method for Flash Point by Small Scale Closed Cup Tester (Ramp Method)[1,2]

This standard is issued under the fixed designation D7236; the number immediately following the designation indicates the year of original adoption or, in the case of revision, the year of last revision. A number in parentheses indicates the year of last reapproval. A superscript epsilon (ε) indicates an editorial change since the last revision or reapproval.

INTRODUCTION

This flash point test method is a dynamic test method and depends on a definite rate of temperature increase to control the precision of the test method. The rate of heating may not in all cases give the precision quoted in the test method because of the low thermal conductivity of certain materials. The use of an equilibrium method such as Test Methods D3828, Method B improves the prediction of flammability for such materials, as the vapors above the test specimen and the test specimen are closer to thermal equilibrium.

Flash point values are a function of the apparatus design, the condition of the apparatus used, and the operational procedure carried out. Flash point can therefore only be defined in terms of a standard test method, and no general valid correlation can be guaranteed between results obtained by different test methods or with test apparatus different than that specified.

1. Scope

1.1 This test method covers the determination of the flash point of aviation turbine fuel, diesel fuel, kerosine and related products in the temperature range of 40 °C to 135 °C by a small scale closed cup apparatus.

1.2 This test method is only applicable to homogeneous materials that are liquid at or near ambient temperature and at temperatures required to perform the test.

1.3 This test method is not applicable to liquids contaminated by traces of highly volatile materials.

1.4 This test method is a dynamic method and depends on a definite rate of temperature increase. It is one of many flash point methods available, and every flash point test method, including this one, is an empirical one.

1.5 If the user's specification requires a defined flash point method, neither this test nor any other method should be substituted for the prescribed method without obtaining comparative data and an agreement from the specifier.

1.6 The values stated in SI units are to be regarded as standard. No other units of measurement are included in this standard.

1.7 *This standard does not purport to address all of the safety concerns, if any, associated with its use. It is the responsibility of the user of this standard to establish appropriate safety, health, and environmental practices and determine the applicability of regulatory limitations prior to use.* For specific hazard statements, see Section 7 and the Material Safety Data Sheet for the product being tested.

1.8 *This international standard was developed in accordance with internationally recognized principles on standardization established in the Decision on Principles for the Development of International Standards, Guides and Recommendations issued by the World Trade Organization Technical Barriers to Trade (TBT) Committee.*

2. Referenced Documents

2.1 *ASTM Standards:*[3]

D3828 Test Methods for Flash Point by Small Scale Closed Cup Tester

D4057 Practice for Manual Sampling of Petroleum and Petroleum Products

D4177 Practice for Automatic Sampling of Petroleum and Petroleum Products

[1] This test method is under the jurisdiction of ASTM Committee D02 on Petroleum Products, Liquid Fuels, and Lubricants and is the direct responsibility of Subcommittee D02.08 on Volatility.

Current edition approved July 1, 2021. Published August 2021. Originally approved in 2006. Last previous edition approved in 2016 as D7236 – 16a. DOI: 10.1520/D7236-16AR21.

[2] This test method is being jointly developed and harmonized with the Energy Institute.

[3] For referenced ASTM standards, visit the ASTM website, www.astm.org, or contact ASTM Customer Service at service@astm.org. For *Annual Book of ASTM Standards* volume information, refer to the standard's Document Summary page on the ASTM website.

Copyright © ASTM International, 100 Barr Harbor Drive, PO Box C700, West Conshohocken, PA 19428-2959. United States

D6299 Practice for Applying Statistical Quality Assurance and Control Charting Techniques to Evaluate Analytical Measurement System Performance

D6300 Practice for Determination of Precision and Bias Data for Use in Test Methods for Petroleum Products, Liquid Fuels, and Lubricants

E300 Practice for Sampling Industrial Chemicals

2.2 *ISO Standards:*[4]

ISO Guide 34 General requirements for the competence of reference material producers

ISO Guide 35 Reference materials—General and statistical principles for certification

3. Terminology

3.1 *Definitions:*

3.1.1 *flash point, n—in flash point test methods*, the lowest temperature of the test specimen, adjusted to account for variations in atmospheric pressure from 101.3 kPa, at which application of an ignition source causes the vapors of the test specimen to ignite under the specified conditions of test.

3.2 *Definitions of Terms Specific to This Standard:*

3.2.1 *dynamic, adj*—the condition where the vapor above the test specimen, and the test cup, are not in temperature equilibrium at the time the test flame is applied.

3.2.2 *ramp method, n—in flash point methods,* method that has a test temperature increase at a set rate.

4. Summary of Test Method

4.1 A 2 mL ± 0.1 mL test specimen is introduced into the test cup that is then heated automatically at a constant rate of 2 °C/min ± 0.5 °C/min. A gas test flame is directed through an opening shutter, in the test cup lid, at specified temperature intervals until a flash is detected by the automatic flash detector. The flash is reported as defined in 3.1.1.

5. Significance and Use

5.1 The flash point temperature is one measure of the tendency of the test specimen to form a flammable mixture with air under controlled laboratory conditions. It is only one of a number of properties that must be considered in assessing the overall flammability hazard of a material.

5.2 Flash point is used in shipping and safety regulations to define *flammable* and *combustible* materials and classify them. Consult the particular regulation involved for precise definitions of these classifications.

5.3 This test method can be used to measure and describe the properties of materials in response to heat and a test flame under controlled laboratory conditions and shall not be used to describe or appraise the fire hazard or fire risk of materials under actual fire conditions. However, results of this test method may be used as elements of a fire risk assessment, that takes into account all of the factors that are pertinent to an assessment of the fire hazard of a particular end use.

[4] Available from American National Standards Institute (ANSI), 25 W. 43rd St., 4th Floor, New York, NY 10036, http://www.ansi.org.

6. Apparatus

6.1 *Flash Point Apparatus*—The apparatus consists of an electrically heated test cup that is controlled automatically to give a temperature increase of 2.0 °C/min ± 0.5 °C/min, a lid and shutter assembly, a pilot and test flame, an automatic flash detector and a temperature display that displays and holds the test temperature when a flash is detected. The key parts and dimensions are described in Annex A1 and illustrated in A1.1.

6.2 *Syringe,* 2 mL, adjusted to deliver 2.00 mL ± 0.1 mL.

6.3 *Barometer,* accurate to 0.5 kPa. Barometers precorrected to give sea level readings, such as those used at weather stations and airports, shall not be used.

NOTE 1—Automatic barometric correction in accordance with 12.2 may be installed in the apparatus.

6.4 *Cooling Bath or Freezer,* for cooling the samples, if required, and capable of cooling the sample to at least 10 °C below the expected flash point. If a freezer is used, it shall be of explosion-protected design.

6.5 *Draft Shield,* a shield fitted at the back and on two sides of the instrument, for use in circumstances where natural protection from drafts does not exist.

NOTE 2—A shield 350 mm high, 480 mm wide, and 240 mm deep, is suitable.

7. Reagents and Materials

7.1 *Cleaning Solvent*—Use only noncorrosive solvents capable of cleaning the test cup and lid assembly. Two commonly used solvents are toluene and acetone. (**Warning—**Toluene, acetone and many solvents are flammable and a health hazard. Dispose of solvents and waste material in accordance with local regulations.)

7.2 *Butane or Natural Gas*—For use as the pilot and test flame. (**Warning—**Butane and natural gases are flammable and a health hazard.)

8. Sampling

8.1 Obtain at least a 25 mL sample from a bulk test site in accordance with Practices D4057, D4177, E300 or other comparable sampling practices.

8.2 Store samples in clean, tightly sealed containers at normal room temperature (20 °C to 25 °C) or colder. Ensure that the container is 85 % to 95 % full.

8.3 Do not store samples for an extended period of time in gas permeable containers, such as plastic, because volatile material may diffuse through the walls of the container. Samples in leaky containers are suspect and not a source of valid results.

8.4 Erroneously high flash points can be obtained when precautions are not taken to avoid loss of volatile materials. Do not open containers unnecessarily. Do not make a transfer unless the sample temperature is at least 10 °C below the expected flash point. Where possible perform the flash point as the first test on the sample.

8.5 Samples containing dissolved or free water may be dehydrated with calcium chloride. Warming the sample is

permitted, but do not heat the sample above a temperature of 10 °C below its expected flash point. (**Warning—**If the sample is expected of containing volatile components, the treatment as described in 8.5 should be omitted.)

8.6 Cool or adjust the temperature of the sample and its container to at least 10 °C below the expected flash point before opening to remove the test specimen. If an aliquot of the original sample is to be stored prior to testing, ensure that the container is filled to between 85 % and 95 % of its capacity. Gently mix the subsample to ensure uniformity while minimizing the possible loss of volatile components and light ends.

NOTE 3—Results of flash point tests may be affected if the sample volume falls below 85 % of the container's capacity.

9. Preparation of Apparatus

9.1 Support the apparatus (Annex A1) on a level and steady surface in a draft-free position (see Notes 4 and 5).

NOTE 4—A draft shield (6.5) is recommended to be used when natural protection from drafts does not exist.

NOTE 5—When testing materials that may produce toxic vapors, the apparatus may be located in a fume hood with an individual control of air flow, adjusted such that the toxic vapors can be withdrawn without causing air currents around the test cup during the test.

9.2 Clean the test cup, cover, and its accessories with an appropriate solvent (7.1) to remove traces of gum or residue from the previous test.

NOTE 6—A stream of clean dry air may be used to remove the last traces of solvent used.

NOTE 7—The filler orifice may be cleaned with a pipe cleaner.

10. Verification of Apparatus

10.1 Verify that the temperature measuring device is in accordance with A1.7.

10.2 Verify the performance of the apparatus at least once per year by determining the flash point of a Certified Reference Material (CRM) that has a certified flash point reasonably close to the expected range of the samples to be tested. Examples of materials that may be used to create CRMs are listed in Appendix X1. The flash point shall be determined using the procedures stated in Section 11. Appendix X1 indicates typical limits in Table X1.1 for a typical CRM and shows how to calculate limits for an unlisted CRM.

10.3 Once the performance of the apparatus has been verified using a CRM, the flash point of Secondary Working Standards (SWS) can be determined along with their control limits. These SWS can then be utilized for more frequent performance checks. (See Appendix X1.)

10.4 When the flash point obtained is not within the limits stated in 10.2 or 10.3 check the condition and operation of the apparatus to ensure conformance to the details listed in Annex A1, especially with regard to the action of the shutter, the position and size of the test flame, the heating rate and the temperature sensor readings. After any adjustment, repeat the test in 10.2 or 10.3 using a fresh test specimen, with special attention to the procedural details prescribed in the test method.

11. Procedure

11.1 Set the test cup temperature to 15 °C ± 5 °C below the expected flash point temperature.

11.2 When the test cup is at the required temperature, charge a clean and dry syringe (6.2), adjusted to a temperature at least 10 °C below the expected flash point, with a 2 mL test specimen. Close the sample container immediately after withdrawal of the test specimen, to minimize any loss of volatile components.

11.3 Carefully transfer the syringe to the filler orifice and discharge the test specimen into the test cup by fully depressing the syringe plunger. Remove the syringe.

11.4 Ignite the pilot and test flames. Adjust the test flame to conform to the size of the 4 mm gauge ring. Reset the flash detector (A1.9). Start the test.

NOTE 8—The ignition of the test flame and control of the gas supply may be automated on some instruments.

11.5 The test cup is heated automatically at such a rate that the temperature, as indicated by the temperature sensor, increases by 1.5 °C/min to 2.5 °C/min. The test flame is dipped into the test cup, as the shutter is slowly and uniformly opened and closed over a 2 s to 3 s period, at 1 °C intervals for temperatures up to and including 100 °C and thereafter every 2 °C for temperatures over 100 °C.

11.5.1 Observe the first two dips of the flame for continuous burning in the orifice. If a continuous luminous flame burns in the orifice when the slide is opened and the test flame is introduced, then the flash point lies considerably below the test temperature. In such cases, discontinue the test and repeat the test with a fresh test specimen using a lower expected flash point.

11.5.2 Application of the test flame may cause a blue halo or an enlarged flame prior to the actual flash point. This is not a flash and shall be ignored by the flash detector.

11.6 Record the displayed and held temperature of the temperature sensor when the application of the test flame causes a flash to be automatically detected.

11.7 Record the ambient barometric pressure using a barometer (6.3) in the vicinity of the apparatus at the time of the test.

NOTE 9—It is not considered necessary to correct the barometric pressure reading to 0 °C, although some barometers are designed to make this correction automatically.

11.8 When the temperature at which the flash is observed is less than 10 °C or greater than 30 °C from the start temperature of the test, the result is not valid. Repeat the test using a fresh test specimen adjusting the temperature of the first application of the test flame until a valid determination is made.

12. Calculation

12.1 *Barometric Pressure Conversion*—If the barometric pressure reading is measured in a unit other than kilopascals, convert to kilopascals using one of the following equations:

$$\text{Reading in hPa} \times 0.1 = \text{kPa} \quad (1)$$

$$\text{Reading in mbar} \times 0.1 = \text{kPa} \quad (2)$$

$$\text{Reading in mmHg} \times 0.1333 = \text{kPa} \quad (3)$$

12.2 *Correction of Detected Flash Point to Standard Atmospheric Pressure*—Calculate the flash point corrected to a standard atmospheric pressure of 101.3 kPa, T_c, using the following equation:

$$T_c = T_D + 0.25\,(101.3 - p) \quad (4)$$

where:

T_D = the detected flash point temperature at ambient barometric pressure, expressed in degrees Celsius, and

p = the ambient barometric pressure, expressed in kilopascals.

NOTE 10—This equation is strictly correct only within the barometric pressure range from 98.0 kPa to 104.7 kPa.

13. Report

13.1 Report the source, type and identification of the material tested, plus the dates sampled and tested.

13.2 Refer to this test method and report any deviation, by agreement or otherwise, from the procedure specified.

13.3 Report the corrected flash point of the test specimen rounded to the nearest 0.5 °C in accordance with Test Method D7236.

14. Precision and Bias[5]

14.1 The precision data were developed in a 2004 cooperative test program involving 13 laboratories and 8 samples comprising 3 diesel fuels, 2 kerosines, 2 jetA/A1 fuels and hexadecane. The precision statements for both repeatability and reproducibility cover the range 40 °C to 135 °C.

14.2 *Repeatability*—The difference between two test results obtained by the same operator with the same apparatus under constant operating conditions, on identical test material would, in the long run, in the normal and correct operation of the test method, exceed the following only in one case in twenty.

$$r = 0.01285(x + 40) \text{ for the flash point range 40 °C to 135°C} \quad (5)$$

where:

x = the average of results being compared.

14.3 *Reproducibility*—The difference between two single and independent results obtained by different operators working in different laboratories on identical test material would, in the long run, in the normal correct operation of the test method, exceed the following only in one case in twenty. For examples of precision, see

$$R = 0.02482(x + 40) \text{ for the flash point range 40 °C to 135°C} \quad (6)$$

where:

x = the average of results being compared.

Examples of Precision

Flash Point	40 °C	60 °C	80 °C	100 °C	120 °C	135 °C
r °C	1.0	1.3	1.5	1.8	2.1	2.2
R °C	2.0	2.5	3.0	3.5	4.0	4.3

14.4 *Bias*—Since there is no accepted reference material suitable for determining the bias of the procedures in Test Method D7236, bias cannot be determined.

14.5 *Relative Bias to Test Methods D3828, Method B*—An indication of relative bias for the sample set involved in the interlaboratory test program is given in Appendix X2.

15. Keywords

15.1 automatic; closed cup; flammability; flash point; ramp; small scale

[5] Supporting data have been filed at ASTM International Headquarters and may be obtained by requesting Research Report RR:D02-1593. The following equipment, as listed in RR:D02-1593, was used to develop this precision statement: Model numbers: Setaflash 33000, 70000, 71000, and 34700. Stanhope-Seta, Chertsey, Surrey, KT16 8AP, UK. This is not an endorsement or certification by ASTM.

ANNEX

(Mandatory Information)

A1. APPARATUS SPECIFICATION

A1.1 See Fig. A1.1 for apparatus dimensions and typical configuration.

A1.2 *Test Cup Block*—The test cup block shall be made of aluminium alloy or non-rusting metal of similar thermal conductivity, with a cylindrical depression (test cup), and with a hole in the side to accommodate a temperature sensor (A1.7).

A1.3 *Cover*—The cover shall be fitted with an opening slide and a device that permits automated insertion of a test flame of diameter 4 mm ± 0.5 mm into the test cup when the slide is open. When inserted, the nozzle of the test flame shall intersect the plane of the underside of the cover within ±0.1 mm. The cover shall be provided with an orifice extending into the test cup for insertion of the test specimen, and also a suitable device for securing the cover tightly to the metal block. The three openings in the cover shall be within the diameter of the test cup. The slide shall be fitted with a spring or other device to ensure that it stays in the fully closed position when shut. When the slide is in the open position, the two openings in the slide shall coincide with the two corresponding openings in the cover. The O-ring shall be made of heat-resistant material and provide a tight seal when the cover is shut.

A1.4 *Electrical Heater*—The heater shall be attached to the test cup in a manner that provides efficient transfer of heat. The heater control shall be capable of automatically controlling the

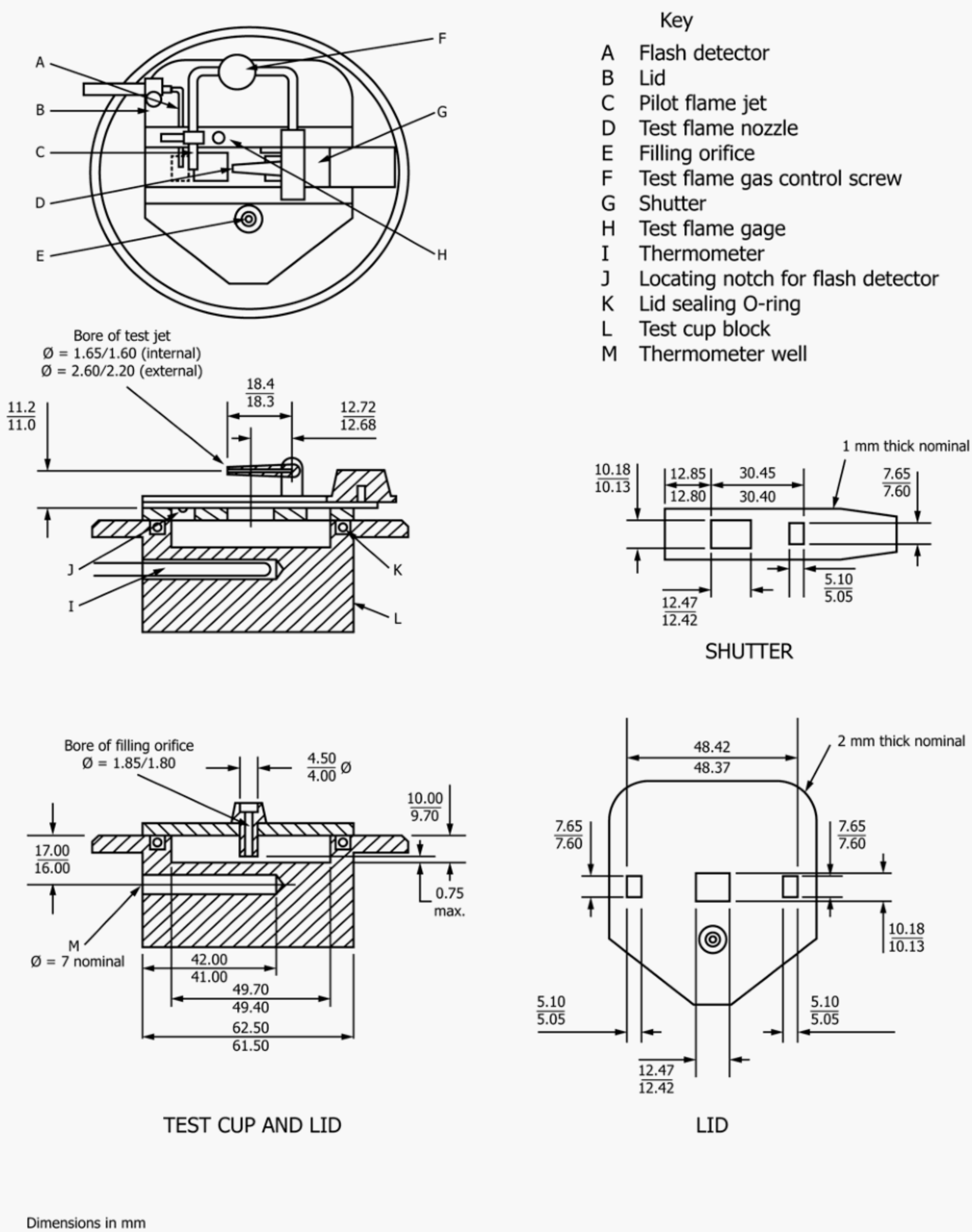

FIG. A1.1 Flash Point Cup and Lid Assembly

test cup temperature, as measured by the integral temperature sensor, and in a draft-free area, to between 1.5 °C/min and 2.5 °C/min for the duration of the test.

A1.5 *Test Flame and Pilot Ignitor*—A gauge ring 4 mm in diameter shall be engraved on the cover near to the test flame. The flames shall be fueled by butane or natural gas.

NOTE A1.1—Other gases may be used, but the result and precision may be affected.

A1.6 *Timing Device*—An electronic device with an accuracy of better than 1 %.

A1.7 *Temperature Sensor*—An electronic device utilizing a platinum resistance thermometer with an accuracy of better than 0.5 °C up to 100 °C and 1.0 °C at higher temperatures respectively.

A1.8 *Test Cup Cooler (optional)*—An electronic Peltier or other suitable cooling device to cool the cup between tests or to enable sub-ambient testing.

A1.9 *Flash Detector*—Low mass thermocouple device for the automatic detection of the flash point flame. A flash shall be indicated if a temperature rise of greater than 6.0 °C is detected within 100 ms.

APPENDIXES

(Nonmandatory Information)

X1. VERIFICATION OF APPARATUS PERFORMANCE

X1.1 *Certified Reference Material (CRM)*—CRM is a stable, pure (99 + mole % purity) hydrocarbon or other stable petroleum product with a method-specific flash point established by a method-specific interlaboratory study following ASTM Practice D6300 or ISO Guides 34 and 35.

X1.1.1 Typical values of the flash point corrected for barometric pressure for some reference materials and their typical limits are given in Table X1.1. Suppliers of CRMs will provide certificates stating the method-specific flash point for each material of the current production batch. Calculation of the limits for these materials can be determined from the reproducibility of this test method multiplied by 0.7. This value provides a nominal coverage of at least 90 % with 95 % confidence.

TABLE X1.1 Typical Flash Point Values and Typical Limits for CRMs

Hydrocarbon	Purity (Mole %)	Nominal Flash Point °C	Tolerance Limits (0.7R) °C
hexadecane	99+	134.8	±3.0

X1.2 *Secondary Working Standards (SWS)*—SWS is a stable, pure (99 + mole % purity) hydrocarbon or other petroleum product whose composition is known to stay appreciably stable.

NOTE X1.1—True CRMs can only be developed once an agreed standard test method exists. As this is the first official version of this test method, CRMs do not exist. In the absence of CRMs the data shown in Table X1.1 may be regarded as an acceptable substitute. Other materials may become available as CRM, when produced in accordance with Practice D6300 or ISO Guides 34 and 35. Certificates of performance of such materials should be consulted before use, as the flash point value can vary, depending on the composition of each CRM batch.

X1.2.1 Establish the mean flash point and the statistical control limits (3σ) for the SWS using standard techniques. See ASTM Practice D6299.

X2. RELATIVE BIAS TO TEST METHODS D3828, METHOD B

X2.1 For the samples used in the interlaboratory test study (comprising 3 diesel fuels, 2 kerosines, 2 jetA/A1 fuels and one chemical) it was found that the results of the tests were on average 0.8 °C higher than those from Test Methods D3828, Method B. See the research report RR:D02-1593 for further details.[5]

ASTM International takes no position respecting the validity of any patent rights asserted in connection with any item mentioned in this standard. Users of this standard are expressly advised that determination of the validity of any such patent rights, and the risk of infringement of such rights, are entirely their own responsibility.

This standard is subject to revision at any time by the responsible technical committee and must be reviewed every five years and if not revised, either reapproved or withdrawn. Your comments are invited either for revision of this standard or for additional standards and should be addressed to ASTM International Headquarters. Your comments will receive careful consideration at a meeting of the responsible technical committee, which you may attend. If you feel that your comments have not received a fair hearing you should make your views known to the ASTM Committee on Standards, at the address shown below.

This standard is copyrighted by ASTM International, 100 Barr Harbor Drive, PO Box C700, West Conshohocken, PA 19428-2959, United States. Individual reprints (single or multiple copies) of this standard may be obtained by contacting ASTM at the above address or at 610-832-9585 (phone), 610-832-9555 (fax), or service@astm.org (e-mail); or through the ASTM website (www.astm.org). Permission rights to photocopy the standard may also be secured from the Copyright Clearance Center, 222 Rosewood Drive, Danvers, MA 01923, Tel: (978) 646-2600; http://www.copyright.com/