This international standard was developed in accordance with internationally recognized principles on standardization established in the Decision on Principles for the Development of International Standards, Guides and Recommendations issued by the World Trade Organization Technical Barriers to Trade (TBT) Committee.

Designation: D7671 – 10 (Reapproved 2021)

Standard Test Method for Corrosiveness to Silver by Automotive Spark–Ignition Engine Fuel–Silver Strip Method[1]

This standard is issued under the fixed designation D7671; the number immediately following the designation indicates the year of original adoption or, in the case of revision, the year of last revision. A number in parentheses indicates the year of last reapproval. A superscript epsilon (ε) indicates an editorial change since the last revision or reapproval.

1. Scope

1.1 This test method covers the determination of the corrosiveness to silver by automotive spark-ignition engine fuel, as defined by Specification D4814, or similar specifications in other jurisdictions, having a vapor pressure no greater than 124 kPa (18 psi) at 37.8 °C (100 °F), by one of two procedures. Procedure A involves the use of a pressure vessel, whereas Procedure B involves the use of a vented test tube.

1.2 The result of the test is based on a visual rating that is classified as an integer in the range from 0 to 4 as defined in Table 1.

1.3 The values stated in SI units are to be regarded as the standard. The values in parentheses are for information only.

1.4 *This standard does not purport to address all of the safety concerns, if any, associated with its use. It is the responsibility of the user of this standard to establish appropriate safety, health, and environmental practices and determine the applicability of regulatory limitations prior to use.* For specific warning statements, see 6.1 and Section 7.

1.5 *This international standard was developed in accordance with internationally recognized principles on standardization established in the Decision on Principles for the Development of International Standards, Guides and Recommendations issued by the World Trade Organization Technical Barriers to Trade (TBT) Committee.*

2. Referenced Documents

2.1 *ASTM Standards:*[2]

D130 Test Method for Corrosiveness to Copper from Petroleum Products by Copper Strip Test

D3241 Test Method for Thermal Oxidation Stability of Aviation Turbine Fuels

D4057 Practice for Manual Sampling of Petroleum and Petroleum Products

D4177 Practice for Automatic Sampling of Petroleum and Petroleum Products

D4814 Specification for Automotive Spark-Ignition Engine Fuel

E1 Specification for ASTM Liquid-in-Glass Thermometers

2.2 *Energy Institute Standard:*

IP 227 Determination of Corrosiveness to Silver of Aviation Turbine Fuels–Silver Strip Method[3]

2.3 *ASTM Adjuncts:*

Color Standard for Tube Deposit Rating[4]

3. Summary of Test Method

3.1 This test method covers two procedures. Procedure A involves the use of a pressure vessel (to prevent the loss of volatile components in the sample), whereas Procedure B involves the use of a vented test tube. In both procedures, a freshly polished silver strip is suspended in 30 mL of sample which is heated to 50 °C ± 1 °C for a duration of 3 h ± 5 min. At the end of the heating period, the silver strip is removed, washed and the color and tarnish level assessed against the requirements in Table 1.

4. Significance and Use

4.1 Crude petroleum contains sulfur compounds, most of which are removed during refining. However, of the sulfur compounds remaining in the petroleum product, some can have a corroding action on various metals and this corrosivity is not related to the total sulfur content. In addition, fuels can become contaminated by corrosive sulfur compounds during storage and distribution. The corrosive effect can vary according to the chemical types of sulfur compounds present.

4.2 The silver strip corrosion test is designed to assess the relative degree of corrosivity of a petroleum product towards silver and silver alloys.

[1] This test method is under the jurisdiction of ASTM Committee D02 on Petroleum Products, Liquid Fuels, and Lubricants and are the direct responsibility of Subcommittee D02.05 on Properties of Fuels, Petroleum Coke and Carbon Material.

Current edition approved Jan. 1, 2021. Published February 2021. Originally approved in 2010. Last previous edition approved in 2015 as D7671 – 10 (2015). DOI: 10.1520/D7671-10R21.

[2] For referenced ASTM standards, visit the ASTM website, www.astm.org, or contact ASTM Customer Service at service@astm.org. For *Annual Book of ASTM Standards* volume information, refer to the standard's Document Summary page on the ASTM website.

[3] Withdrawn without replacement in 2001. Copies of IP 227/99 can be obtained at The Publications Department, Energy Institute, 61 New Cavendish Street, London, W1G 7AR, United Kingdom.

[4] Available from ASTM International Headquarters. Order Adjunct No. ADJD3241. Original adjunct produced in 1986.

Copyright © ASTM International, 100 Barr Harbor Drive, PO Box C700, West Conshohocken, PA 19428-2959. United States

TABLE 1 Silver Strip Classifications

NOTE 1—Classifications provided by IP 227 Determination of Corrosiveness to Silver of Aviation Turbine Fuels–Silver Strip Method.

NOTE 2—Distinctions between Classifications 1 and 2 are made using The Color Standard for Tube Deposit Rating (referenced in Test Method D3241) in accordance with 11.1.1.

Classification	Designation	Description
0	No tarnish	Identical to a freshly polished strip, but may have some very light loss of luster
1	Slight tarnish	Faint brown or white discoloration of strip (see 12.1)
2	Moderate tarnish	Peacock colors such as blue or mauve or medium/dark straw or brown coloration (see 12.1)
3	Slight blackening	Spots and patches of black or gray on surface or uniform thin film of black deposit
4	Blackening	Uniform heavy blackening with or without scaling

4.3 Reactive sulfur compounds present in automotive spark-ignition engine fuels under some circumstances can corrode or tarnish silver alloy fuel gauge in-tank sender units (and silver-plated bearings in some 2-stroke cycle engines). To minimize or prevent the failure of silver alloy in-tank sender units by corrosion or tarnish, Specification D4814 requires that fuels shall pass the silver strip corrosion test.

5. Apparatus

5.1 *Silver Strip Corrosion Pressure Vessel (Procedure A),* constructed from stainless steel or similar strong and non-corroding metallurgy according to the dimensions as given in Fig. 1, that is the apparatus described in Test Method D130. The vessel shall be capable of withstanding a test pressure of 700 kPa gauge (100 psi).

5.1.1 Alternative designs for the vessel's cap and synthetic rubber gasket may be used provided that the internal dimensions of the vessel are the same as those shown in Fig. 1. The internal dimensions of the pressure vessel are such that a nominal 25 mm by 150 mm test tube can be placed inside the pressure vessel.

5.2 *Test Tubes,* of borosilicate glass of nominal 25 mm by 150 mm dimensions. The internal dimensions shall be checked as acceptable by use of a silver strip (see 6.3). When 30 mL of liquid is added to the test tube with the silver strip in it, a minimum of 5 mm of liquid shall be above the top surface of the strip.

5.3 *Stoppers (Procedure B),* such as cork, to accompany test tubes in 5.2. Each stopper shall have a vent hole to equilibrate pressure that may build up in the test. The stoppers should be drilled through the center and fitted with a length of 3.2 mm (⅛ in.) OD glass or Nalgene vent tube.

5.4 *Silver Strip Suspension Assembly,* such as examples shown in Fig. 2 (Procedure A) or Fig. 3 (Procedure B), capable of suspending the silver strip in approximately the center of the sample-filled test tube during the test, such that the strip is kept in an upright and vertical position.

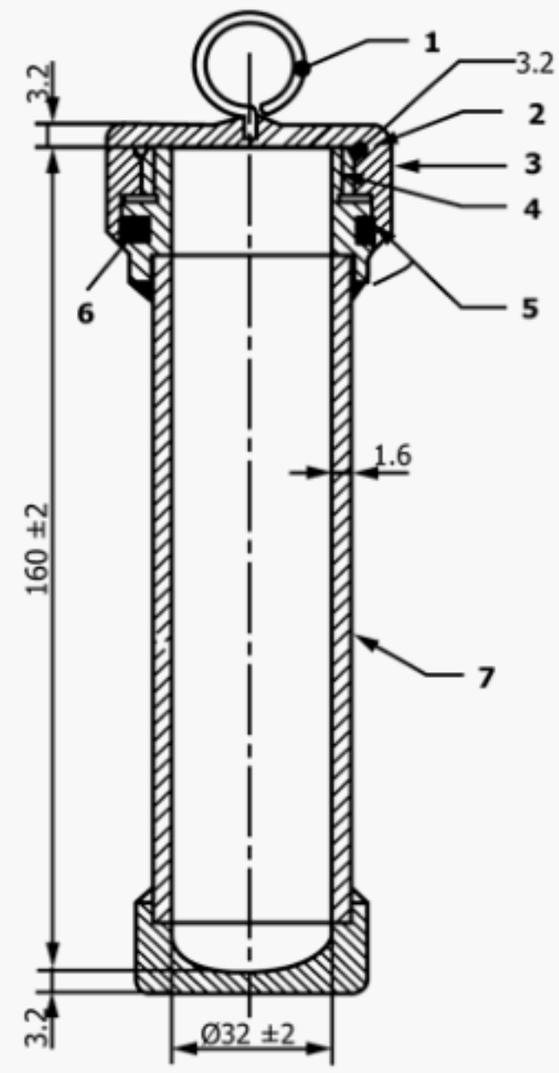

Key:
1. Lifting eye
2. Wide groove for pressure relief
3. Knurled cap
4. Twelve threads per inch NF thread or equivalent
5. Camber inside cap to protect "O" ring when closing pressure vessel
6. Synthetic rubber "O" ring without free sulfur
7. Seamless tube

Material: stainless steel
Welded construction
Maximum test gauge pressure: 700 kPa

NOTE 1—Dimensions in millimetres.
NOTE 2—All dimensions without tolerance limits are nominal values.

FIG. 1 Pressure Vessel for Silver Strip Corrosion Test (Procedure A)

5.4.1 For Procedure A, a cradle of glass, polytetrafluoroethylene or other inert material connected to a holder of sufficient length and width as shown in Fig. 2 has been found suitable to use.

5.4.2 For Procedure B, a cable tie (see 6.2) wrapped around the edges of the strip and inserted through the stopper has been found suitable to use for this purpose as shown in Fig. 3.

5.4.3 Other assemblies or designs capable of meeting the functional requirement may also be used in Procedures A or B.

5.5 *Test Bath:*

5.5.1 *General*—The test baths shall be able to maintain the test temperature to within ±1 °C (2 °F) of the required test temperature (normally 50 °C).

5.5.2 *Liquid Bath Used for Submerging Pressure Vessel(s) (Procedure A)*—The bath shall be deep enough to submerge one or more pressure vessels (see 5.1) completely during the test. As the bath medium, use water or any liquid that can be satisfactorily controlled to the sample test temperature. The bath shall be fitted with suitable supports to hold each pressure

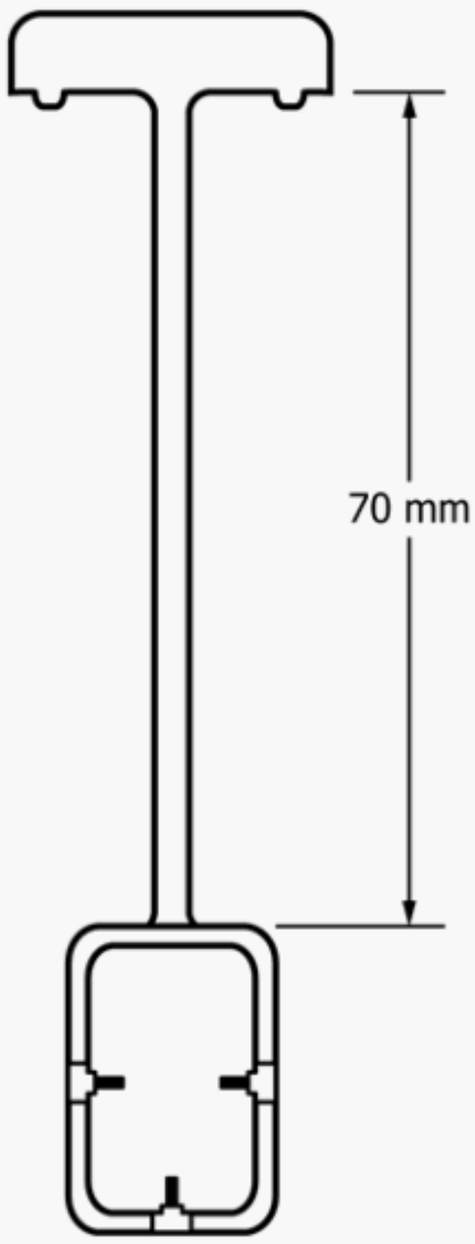

FIG. 2 Silver Strip Suspension Assembly (Procedure A)

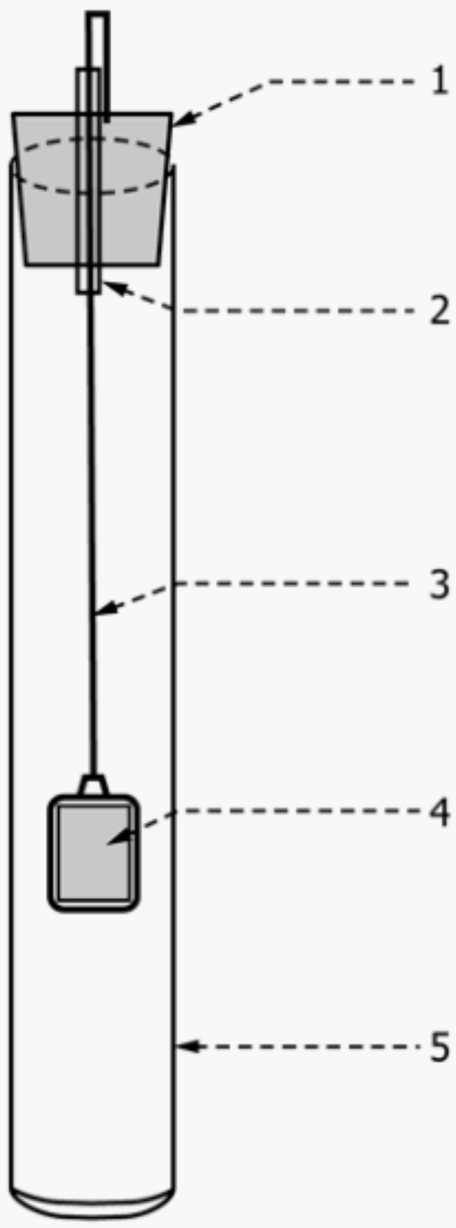

Key:
1. Stopper
2. Vent tube
3. Cable tie
4. Silver strip
5. Test tube

FIG. 3 Silver Strip Suspension Assembly (Procedure B)

vessel in a vertical position when submerged. The use of a solid block bath has been found as a suitable alternative to the liquid bath.

5.5.3 *Liquid Bath Used for Vented Test Tube Method (Procedure B)*—The bath liquid level shall be at a level that is higher than the liquid level in the test tube at the test temperature. It is recommended that the bath be placed inside an exhaust hood.

5.5.4 The use of a solid block bath has been found to be a suitable alternative to the liquid bath.

5.6 *Temperature Sensing Device (TSD),* capable of monitoring the desired test temperature in the bath to within accuracy of ±1 °C (2 °F), measured in the middle of the liquid bath. The ASTM 12C (12F) (see Specification E1) or ASTM E2251 (see Specification E1) or IP 64C (64F) total immersion thermometers have been found suitable for use in the test. If used, no more than 10 mm (0.4 in.) of the mercury should extend above the surface of the bath at the test temperature.

5.7 *Polishing Vise,* for holding the silver strip firmly without marring the edges while polishing. Any convenient type of holder (see Appendix X1) may be used provided that the strip is held tightly and that the surface of the strip being polished is supported above the surface of the holder.

5.8 *Viewing Test Tubes,* (optional) flat glass test tubes, are convenient for protecting corroded silver strips for close inspection or storage (see Appendix X1 for the description of a flat-glass viewing tube). The viewing test tube shall be of such dimensions as to allow the introduction of a silver strip (see 6.3) and made of glass free of striae or similar defects.

5.9 *Forceps,* with either stainless steel or polytetrafluoroethylene tips, for use in handling the silver strips, have been found suitable to use.

5.10 *Timing Device,* electronic or manual, capable of accurately measuring the test duration within the allowable tolerance.

5.11 *ASTM Silver Strip Corrosion Standards,* consist of reproductions in color of typical test strips representing increasing degrees of tarnish and corrosion, the reproductions being encased for protection in plastic and made up in the form of a plaque. See Table 1.

5.11.1 Keep the plastic-encased ASTM Silver Strip Corrosion Standards protected from light to avoid the possibility of fading. Inspect for fading by comparing two different plaques, one of which has been carefully protected from light (for example, new plaque). Observe both sets in diffused daylight (or equivalent) first from a point directly above and then from an angle of 45°. If any evidence of fading is observed, particularly at the left-hand end of the plaque, it is suggested that the one that is the more faded with respect to the other be discarded.

5.11.1.1 Alternatively, place a suitably sized opaque strip (for example, 20 mm (¾ in.) black electrical tape) across the top of the colored portion of the plaque when initially purchased. At intervals remove the opaque strip and observe. When there is any evidence of fading of the exposed portion, the standards shall be replaced.

5.11.2 The plaques are full-color reproductions of typical strips. They have been printed on aluminum sheets by a 4-color process and are encased in plastic for protection. Directions for their use are given on the reverse side of each plaque.

5.11.3 If the surface of the plastic cover shows excessive scratching, it is suggested that the plaque be replaced.

6. Reagents and Materials

6.1 *Ashless Filter Paper or Disposable Gloves,* for use in protecting the silver strip from coming in contact with the individual during final polishing.

6.2 *Cable Tie*—Inert ties such as nylon ties of approximate dimensions 2 mm × 208 mm.

6.3 *Silver Strips*—Use strips 12.5 mm to 12.7 mm wide, 2.5 mm to 3.0 mm thick, and 17.0 mm to 19.0 mm long assaying at 99.9 % (m/m) Ag minimum, which are the same specification requirements described in IP 227. The strips may be used repeatedly but should be discarded when the strip's surface shows pitting or deep scratches that cannot be removed by the specified polishing procedure, or when the surface becomes deformed.

6.4 *Surface Preparation/Polishing Materials,* silicon carbide grit paper or cloth of varying degrees of fineness including 53 µm to 65 µm (240 grit) grade; also a supply of 105 µm (150 mesh) size silicon carbide grain or powder and absorbent cotton (cotton wool). A commercial grade of absorbent cotton is suitable, but pharmaceutical grade is most commonly available and is acceptable.

6.5 *Wash Solvent*—2,2,4-trimethylpentane (*iso*octane) of minimum 99.75 % purity. (**Warning—**Extremely flammable. See 7.1.)

7. Hazards

7.1 *Wash Solvent*—2,2,4-trimethylpentane (*iso*octane): Harmful if inhaled. Use with adequate ventilation. Keep away from heat, sparks, and open flame. Avoid prolonged or repeated skin contact. Consult MSDS for additional information.

7.2 *Automotive Spark-Ignition Fuel (typically gasoline)*—Harmful if inhaled. Use with adequate ventilation. Keep away from heat, sparks, and open flame. Avoid prolonged or repeated skin contact. Consult MSDS for additional information.

8. Samples

8.1 In accordance with Practice D4057 or D4177, or both, it is particularly important that all types of fuel samples be collected in clean, amber glass bottles, plastic bottles, or other suitable containers that will not affect the corrosive properties of the fuel. Avoid the use of tin plate containers for collection of samples, since experience has shown that they may contribute to the corrosiveness of the sample.

8.2 Collect samples and close the container immediately after taking the sample. Adequate headspace in the container is necessary to provide room for possible thermal expansion during transport. It is recommended that volatile samples be filled between 70 % and 80 % of the container's capacity. Take care during sampling to protect the samples from exposure to direct sunlight or even diffused daylight.

8.3 Test the sample as soon as practical after sampling. If samples are not to be tested immediately, store in a refrigerator at a temperature below 5 °C.

8.4 If suspended water (that is, haze) is observed in the sample, dry by filtering a sufficient volume of sample through medium rapid qualitative filter paper, into the prescribed clean, dry test tube. Carry out this operation in a darkened room or under a light-protected shield.

8.4.1 Contact of the silver strip with water before, during or after completion of the test run will cause staining, making it difficult to evaluate the strips.

9. Preparation of Test Strips

9.1 *Surface Preparation*—Remove all surface blemishes from all six sides of the strip obtained from a previous analysis (see Note 1). Use silicon carbide paper or cloth of such degrees of fineness as are needed to accomplish the desired results efficiently. Finish with 53 µm to 65 µm (240 grit) silicon carbide paper or cloth, removing all marks that may have been made by other grades of paper used previously. Immerse the strip in 2,2,4-trimethylpentane from which it can be withdrawn immediately for final preparation (polishing) or in which it can be stored for future use.

9.1.1 As a practical manual procedure for surface preparation, place a sheet of silicon carbide paper or cloth on a flat surface and moisten it with wash solvent. Rub the strip against the silicon carbide paper or cloth with a circular motion, protecting the strip from contact with the fingers by using ashless filter paper or wearing disposable gloves. Alternatively, the surface of the strip may be prepared by use of motor-driven machines using appropriate grades of dry paper or cloth.

9.1.2 Only final preparation (see 9.2) is necessary for commercially purchased pre-polished strips.

9.2 *Final Preparation*—For strips prepared in 9.1 or new strips being used for the first time, remove a strip from the wash solvent. To prevent possible surface contamination during final preparation, do not allow fingers to come in direct contact with the silver strips, by wearing disposable gloves or holding the strips in the fingers protected with ashless filter paper.

9.2.1 Polish first the edges and then the sides with the 105 µm (150 mesh) silicon carbide grains or powder picked up with a pad of cotton (cotton wool) moistened with wash solvent. Polish the edges with straight strokes, rotating the coupon clockwise on edge to polish all four edges. Then repeat the process counter-clockwise to make sure all the edge surfaces are polished. Wipe vigorously with fresh pads of cotton (cotton wool).

9.2.2 Handle the step without touching the surface with the fingers. Forceps have been found suitable to use. Clamp in a vise and polish the main surfaces with silicon-carbide grains on absorbent cotton. Do not polish in a circular motion. Rub in the direction of the long axis of the strip, carrying the stroke beyond the end of the strip before reversing the direction.

9.2.3 Clean all metal dust from the strip by rubbing vigorously with clean pads of absorbent cotton until a fresh pad

remains unsoiled. When the strip is clean, immediately immerse it in the prepared sample.

NOTE 1—It is important to polish the whole surface of the strip uniformly to obtain a uniformly stained strip. If the edges are worn (surface elliptical), they will likely show more corrosion than at the center. The use of a vise will facilitate uniform polishing.

NOTE 2—It is important to follow the order of preparation with the correctly sized silicon carbide material as described in 9.1 and 9.2. The final preparation is with 105 µm silicon carbide grains or powder. This is a larger grain size than the 53 µm to 65 µm paper used in the surface preparation stage. The reason for this use of larger silicon carbide grains in the final preparation is to produce asperities (controlled roughness) on the surface of the silver, which act as sites for the initiation of corrosion reactions.

10. Procedure

10.1 *Procedure A (Involving the Use of a Pressure Vessel):*

10.1.1 Place 30 mL of sample, completely clear and free of any suspended or entrained water (see 8.3) into a chemically clean and dry 25 mm by 150 mm test tube.

10.1.2 Within 1 min after completing the final preparation (polishing, 9.2), place the prepared silver strip inside a suitable suspension assembly, such as the cradle assembly shown in Fig. 2, and insert this assembly into the sample tube.

10.1.3 Place the sample tube and suspension assembly into the pressure vessel (Fig. 1) and screw the lid on tightly.

10.1.3.1 If more than one sample is to be analyzed at essentially the same time, it is permissible to prepare each pressure vessel in the batch before completely immersing each pressure vessel in the liquid bath at 50 °C ± 1 °C (122 °F ± 2 °F), provided the elapsed time between the first and last samples is kept to a minimum.

10.1.4 After 3 h ± 5 min in the bath, withdraw the pressure vessel and immerse for a few minutes in cool water (tap water).

10.1.5 Open the pressure vessel carefully (**Warning—** Contents may be under pressure) in a well ventilated area, such as an exhaust hood, to safely vent any residual pressure that may have built up during the test.

10.1.5.1 Safe venting may be done by cutting a single notch through the threads on the container body only, not on the knurled cap. The notch need be only 1 mm wide, cut no deeper than the valley between threads, and cut carefully so as not to compromise the "O"-ring seal.

10.1.6 Immediately withdraw the silver strip from the suspension assembly with forceps and immerse in wash solvent. Withdraw the strip at once, dry it with ashless filter paper or cotton ball (by blotting not wiping) and inspect it for evidence of tarnishing or corrosion.

10.1.6.1 In handling the test strip during the inspection and comparison, the danger of marking or staining can be avoided if it is inserted in a flat glass tube (see Appendix X1), which can be stoppered with absorbent cotton.

10.2 *Procedure B (Involving the use of a Vented Test Tube):*

10.2.1 Place 30 mL of sample, completely clear and free of any suspended or entrained water (see 8.3) into a chemically clean and dry 25 mm by 150 mm test tube.

10.2.2 Within 1 min after completing the final preparation (polishing), secure the silver strip in a suitable suspension assembly, such as with a cable tie lanyard (see Fig. 3), as described in 10.2.2.1 – 10.2.2.5, and then insert into the test tube and stopper with a vented cork

10.2.2.1 Rest the strip on a clean sheet of filter paper.

10.2.2.2 Insert the tip of the cable tie into the grommet. Tighten slightly, forming a large loop.

10.2.2.3 Position the loop on the paper such that the loop surrounds the outer perimeter of the silver strip. Without touching the strip, carefully tighten the cable tie until it holds the strip securely at the four corners but does not contact any of the other surfaces. The grommet should be located on the short side of the silver strip.

10.2.2.4 Insert the strip into the test tube and pull the end of the cable tie up through the vent tube in the cork stopper.

10.2.2.5 Use the cable tie to raise or lower the suspended silver strip. Position the strip so that a minimum of 5 mm of sample is present above the top of the strip. Once the proper placement is achieved, fold the top of the cable tie over the edge of the vent tube and secure between the exterior of the glass insert and the inner wall of the stopper.

10.3 Place the test tube upright in a test tube rack inside the water bath. (**Warning—**Flammable vapor can be vented from the heated test tube.)

10.3.1 If more than one sample is to be analyzed at essentially the same time, it is permissible to prepare each sample in the batch before immersing in the liquid bath at 50 °C ± 1 °C (122 °F ± 2 °F), provided the elapsed time between the first and last samples is kept to a minimum.

10.4 After 3 h ± 5 min in the bath, withdraw the test tube. Remove the stopper.

10.5 Immediately withdraw the strip with forceps and immerse in wash solvent. Withdraw the strip at once, dry it with ashless filter paper or cotton balls (by blotting not wiping) and inspect it for evidence of tarnishing or corrosion.

10.5.1 In handling the test strip during the inspection and comparison, the danger of marking or staining can be avoided if it is inserted in a flat glass tube (see Appendix X1), which can be stoppered with absorbent cotton.

11. Interpretation of Results

11.1 Interpret the corrosiveness of the sample by comparing the appearance of the test strip with a freshly polished one to give a classification based on that given in Table 1. All surfaces, including the edges, shall be taken into account.

11.1.1 The Color Standard for Tube Deposit Rating (referenced in Test Method D3241) shall be used to differentiate between the brown colorations mentioned in Classifications 1 and 2. Any brown coloration less than No. 4 on the Color Standard shall be rated Classification 1. Any coloration equal to or darker than No. 4 on the Color Standard shall be rated as Classification 2 or higher.

12. Report

12.1 Report the corrosiveness classifications according to Table 1 for the most highly corroded surface of the silver strip. State the duration of the test and the test temperature in the following format, and referencing the test method and procedure (A or B) used to perform the analysis:

$$\text{Corrosion Silver Strip by D7671} - \text{P}\,(X\,\text{h}/Y\,°\text{C}),\ \text{Classification Z} \tag{1}$$

where:

P = procedure A or B,
X = test duration, in hours,
Y = test temperature, °C, and
Z = classification category (that is, 0, 1, 2, 3, or 4).

13. Precision and Bias

13.1 The precision and bias of this test method has not been determined.

14. Keywords

14.1 automotive spark-ignition engine fuel; corrosiveness to silver; gasoline; silver corrosion; silver strip

APPENDIX

(Nonmandatory Information)

X1. OPTIONAL USEFUL EQUIPMENT FOR SILVER STRIP TEST

X1.1 Viewing Tube

X1.1.1 A useful flat glass test tube for holding tarnished silver strips for inspection or for storage for later inspection is illustrated and dimensioned in Fig. X1.1.

X1.2 Strip Vise

X1.2.1 A useful and convenient vise for holding up to four silver strips during final polishing is illustrated and dimensioned in Fig. X1.2.

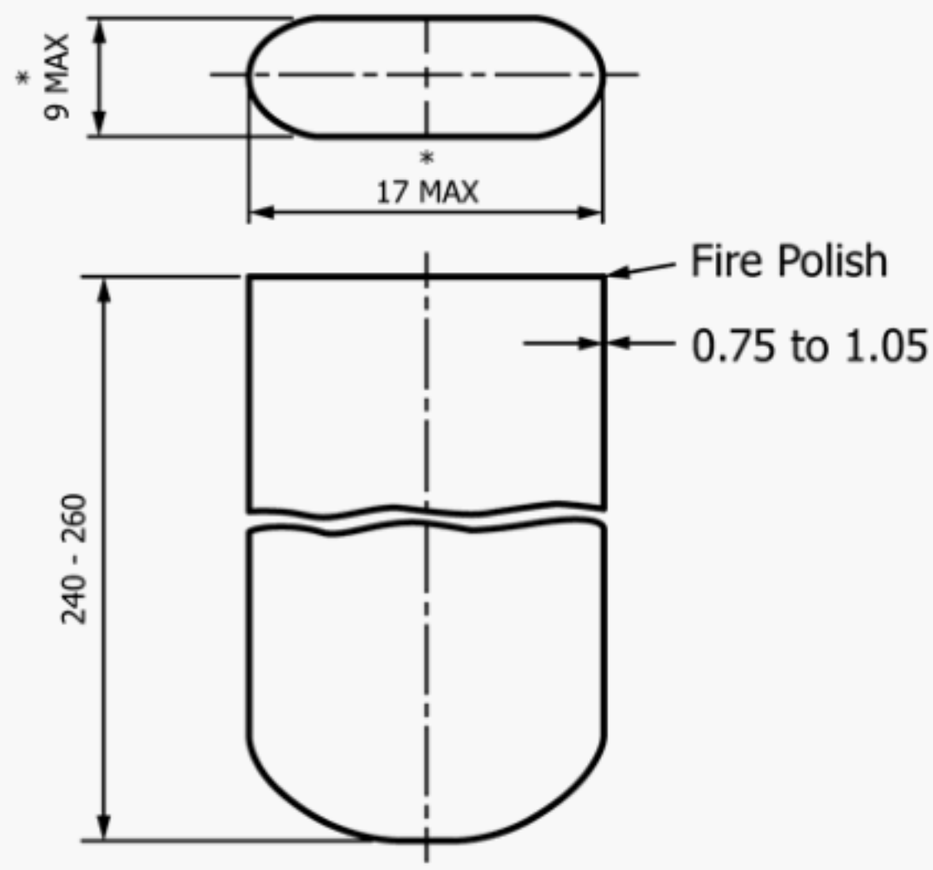

NOTE 1—Dimensions in millimetres.

NOTE 2—The dimensions are the minimum dimensions that allow the introduction of a silver strip.

FIG. X1.1 Flat Glass Viewing Test Tube

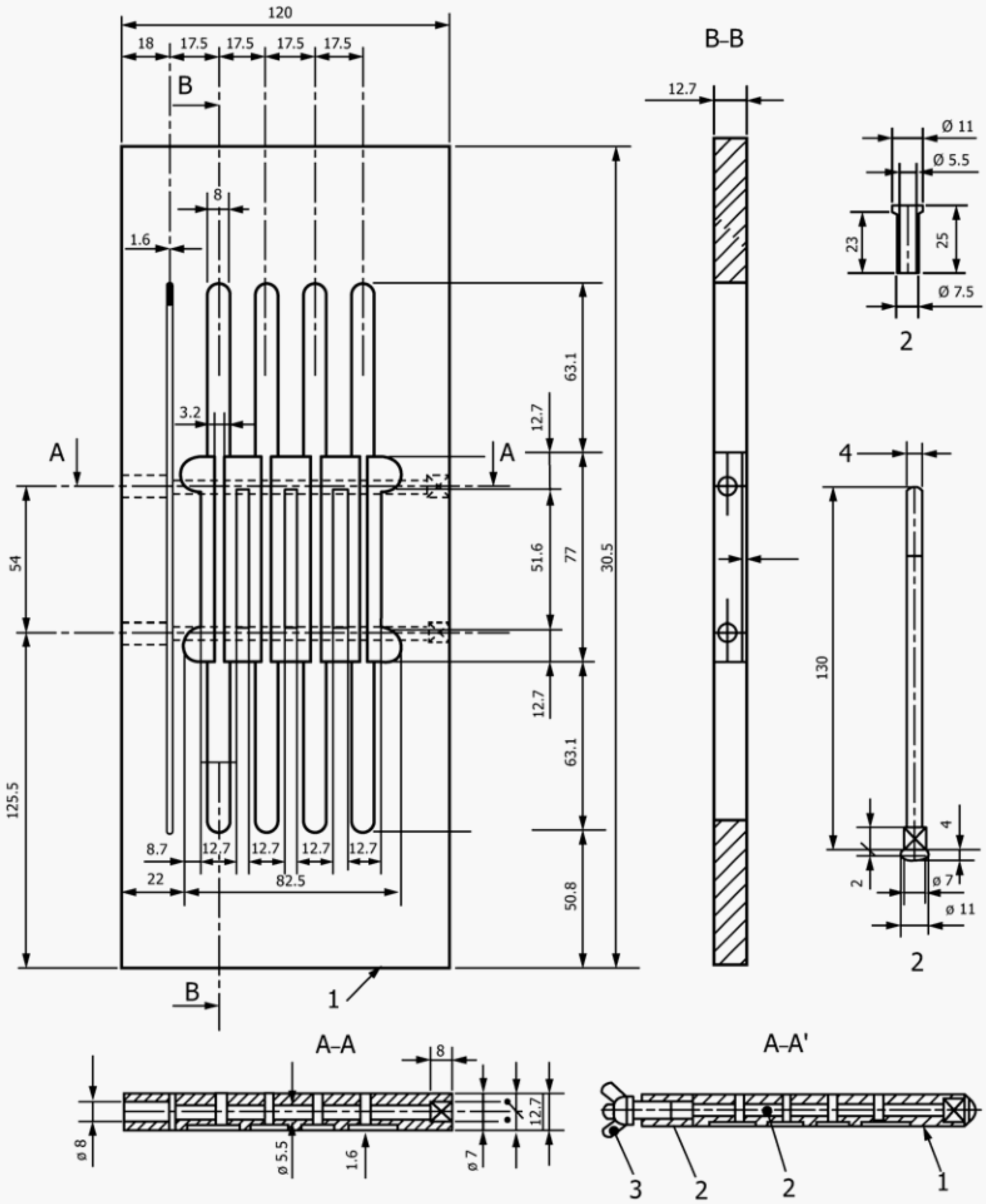

(1) Material: Plastic
(2) Material: Brass
(3) Wing nut
(4) Ø 5 mm metric thread or equivalent

NOTE 1—Dimensions in millimetres.

FIG. X1.2 Multistrip Vise

ASTM International takes no position respecting the validity of any patent rights asserted in connection with any item mentioned in this standard. Users of this standard are expressly advised that determination of the validity of any such patent rights, and the risk of infringement of such rights, are entirely their own responsibility.

This standard is subject to revision at any time by the responsible technical committee and must be reviewed every five years and if not revised, either reapproved or withdrawn. Your comments are invited either for revision of this standard or for additional standards and should be addressed to ASTM International Headquarters. Your comments will receive careful consideration at a meeting of the responsible technical committee, which you may attend. If you feel that your comments have not received a fair hearing you should make your views known to the ASTM Committee on Standards, at the address shown below.

This standard is copyrighted by ASTM International, 100 Barr Harbor Drive, PO Box C700, West Conshohocken, PA 19428-2959, United States. Individual reprints (single or multiple copies) of this standard may be obtained by contacting ASTM at the above address or at 610-832-9585 (phone), 610-832-9555 (fax), or service@astm.org (e-mail); or through the ASTM website (www.astm.org). Permission rights to photocopy the standard may also be secured from the Copyright Clearance Center, 222 Rosewood Drive, Danvers, MA 01923, Tel: (978) 646-2600; http://www.copyright.com/