This international standard was developed in accordance with internationally recognized principles on standardization established in the Decision on Principles for the Development of International Standards, Guides and Recommendations issued by the World Trade Organization Technical Barriers to Trade (TBT) Committee.

Designation: D8111 – 19

Standard Test Method for Evaluation of Automotive Engine Oils in the Sequence IIIH, Spark-Ignition Engine[1]

This standard is issued under the fixed designation D8111; the number immediately following the designation indicates the year of original adoption or, in the case of revision, the year of last revision. A number in parentheses indicates the year of last reapproval. A superscript epsilon (ε) indicates an editorial change since the last revision or reapproval.

INTRODUCTION

Portions of this test method are written for use by laboratories that make use of ASTM Test Monitoring Center (TMC)[2] services (see Annex A1).

The TMC provides reference oils, and engineering and statistical services to laboratories that desire to produce test results that are statistically similar to those produced by laboratories previously calibrated by the TMC.

In general, the test purchaser decides if a calibrated test stand is to be used. Organizations such as the American Chemistry Council require that a laboratory utilize the TMC services as part of their test registration process. In addition, the American Petroleum Institute and the Gear Lubricant Review Committee of the Lubricant Review Institute (SAE International) require that a laboratory use the TMC services in seeking qualification of oils against their specifications.

The advantage of using the TMC services to calibrate test stands is that the test laboratory (and hence the test purchaser) has an assurance that the test stand was operating at the proper level of test severity. It should also be borne in mind that results obtained in a non-calibrated test stand may not be the same as those obtained in a test stand participating in the ASTM TMC services process.

ASTM International policy is to encourage the development of test procedures based on generic equipment. It is recognized that there are occasions where critical/sole-source equipment has been approved by the technical committee (surveillance panel/task force) and is required by the test procedure. The technical committee that oversees the test procedure is encouraged to clearly identify if the part is considered critical in the test procedure. If a part is deemed to be critical, ASTM encourages alternative suppliers to be given the opportunity for consideration of supplying the critical part/component providing they meet the approval process set forth by the technical committee.

An alternative supplier can start the process by initiating contact with the technical committee (current chairs shown on ASTM TMC website). The supplier should advise on the details of the part that is intended to be supplied. The technical committee will review the request and determine feasibility of an alternative supplier for the requested replacement critical part. In the event that a replacement critical part has been identified and proven equivalent the sole-source supplier footnote shall be removed from the test procedure.

1. Scope*

1.1 This test method covers an engine test procedure for evaluating automotive engine oils for certain high-temperature performance characteristics, including oil thickening (as measured by kinematic viscosity increase), piston deposits, ring sticking, oil consumption, and phosphorus retention. Such oils include both single-viscosity and multiviscosity grade oils that are used in both spark-ignition, gasoline-fueled engines, as well as in diesel engines.

1.1.1 Additionally, with nonmandatory supplemental requirements, a Sequence IIIHA Test (Mini Rotary Viscometer and Cold Cranking Simulator measurements), or a Sequence

[1] This test method is under the jurisdiction of ASTM Committee D02 on Petroleum Products, Liquid Fuels, and Lubricants and is the direct responsibility of Subcommittee D02.B0 on Automotive Lubricants.

Current edition approved May 1, 2019. Published June 2019. Originally approved in 2017. Last previous edition approved in 2018 as D8111 – 18a. DOI: 10.1520/D8111-19.

[2] Until the next revision of this test method, the ASTM Test Monitoring Center will update changes in the test method by means of information letters. Information letters may be obtained from the ASTM Test Monitoring Center, 6555 Penn Avenue, Pittsburgh, PA 15206-4489, Attention Administrator. This edition incorporates revisions in all information letters through No. 18-4.

*A Summary of Changes section appears at the end of this standard

Copyright © ASTM International, 100 Barr Harbor Drive, PO Box C700, West Conshohocken, PA 19428-2959. United States

IIIHB Test (phosphorus retention measurement) can be conducted. These supplemental test procedures are contained in Appendix X1 and Appendix X2, respectively.

NOTE 1—Companion test methods used to evaluate engine oil performance for specification requirements are discussed in SAE J304.

1.2 The values stated in SI units are to be regarded as standard. No other units of measurement are included in this standard.

1.2.1 *Exceptions:*

1.2.1.1 Where there is no direct SI equivalent such as screw threads, national pipe threads/diameters, tubing sizes, and valve sizes and springs.

1.2.1.2 The ring end gaps in Table A8.7, the dimensions for the blowby ventilation support bracket in Fig. A3.2, and the torque wrenches in Table A8.1 are in inch-pound units.

1.3 *This standard does not purport to address all of the safety concerns, if any, associated with its use. It is the responsibility of the user of this standard to establish appropriate safety, health, and environmental practices and determine the applicability of regulatory limitations prior to use.* Specific warning statements are provided in 6.11.6, 7.1, 7.2.1, and 7.3.

1.4 *This international standard was developed in accordance with internationally recognized principles on standardization established in the Decision on Principles for the Development of International Standards, Guides and Recommendations issued by the World Trade Organization Technical Barriers to Trade (TBT) Committee.*

2. Referenced Documents

2.1 *ASTM Standards:*[3]

D86 Test Method for Distillation of Petroleum Products and Liquid Fuels at Atmospheric Pressure

D130 Test Method for Corrosiveness to Copper from Petroleum Products by Copper Strip Test

D235 Specification for Mineral Spirits (Petroleum Spirits) (Hydrocarbon Dry Cleaning Solvent)

D240 Test Method for Heat of Combustion of Liquid Hydrocarbon Fuels by Bomb Calorimeter

D323 Test Method for Vapor Pressure of Petroleum Products (Reid Method)

D381 Test Method for Gum Content in Fuels by Jet Evaporation

D445 Test Method for Kinematic Viscosity of Transparent and Opaque Liquids (and Calculation of Dynamic Viscosity)

D525 Test Method for Oxidation Stability of Gasoline (Induction Period Method)

D664 Test Method for Acid Number of Petroleum Products by Potentiometric Titration

D1319 Test Method for Hydrocarbon Types in Liquid Petroleum Products by Fluorescent Indicator Adsorption

D2699 Test Method for Research Octane Number of Spark-Ignition Engine Fuel

D2700 Test Method for Motor Octane Number of Spark-Ignition Engine Fuel

D3231 Test Method for Phosphorus in Gasoline

D3237 Test Method for Lead in Gasoline by Atomic Absorption Spectroscopy

D3244 Practice for Utilization of Test Data to Determine Conformance with Specifications

D3338 Test Method for Estimation of Net Heat of Combustion of Aviation Fuels

D3343 Test Method for Estimation of Hydrogen Content of Aviation Fuels

D4052 Test Method for Density, Relative Density, and API Gravity of Liquids by Digital Density Meter

D4175 Terminology Relating to Petroleum Products, Liquid Fuels, and Lubricants

D4485 Specification for Performance of Active API Service Category Engine Oils

D4684 Test Method for Determination of Yield Stress and Apparent Viscosity of Engine Oils at Low Temperature

D4739 Test Method for Base Number Determination by Potentiometric Hydrochloric Acid Titration

D4815 Test Method for Determination of MTBE, ETBE, TAME, DIPE, tertiary-Amyl Alcohol and C_1 to C_4 Alcohols in Gasoline by Gas Chromatography

D5185 Test Method for Multielement Determination of Used and Unused Lubricating Oils and Base Oils by Inductively Coupled Plasma Atomic Emission Spectrometry (ICP-AES)

D5191 Test Method for Vapor Pressure of Petroleum Products and Liquid Fuels (Mini Method)

D5293 Test Method for Apparent Viscosity of Engine Oils and Base Stocks Between –10 °C and –35 °C Using Cold-Cranking Simulator

D5452 Test Method for Particulate Contamination in Aviation Fuels by Laboratory Filtration

D5453 Test Method for Determination of Total Sulfur in Light Hydrocarbons, Spark Ignition Engine Fuel, Diesel Engine Fuel, and Engine Oil by Ultraviolet Fluorescence

D7320 Test Method for Evaluation of Automotive Engine Oils in the Sequence IIIG, Spark-Ignition Engine

D8047 Test Method for Evaluation of Engine Oil Aeration Resistance in a Caterpillar C13 Direct-Injected Turbocharged Automotive Diesel Engine

E29 Practice for Using Significant Digits in Test Data to Determine Conformance with Specifications

E168 Practices for General Techniques of Infrared Quantitative Analysis

E191 Specification for Apparatus For Microdetermination of Carbon and Hydrogen in Organic and Organo-Metallic Compounds

2.2 *SAE Standards:*[4]

J183 Engine Oil Performance and Engine Service Classification (Other Than "Energy-Conserving")

[3] For referenced ASTM standards, visit the ASTM website, www.astm.org, or contact ASTM Customer Service at service@astm.org. For *Annual Book of ASTM Standards* volume information, refer to the standard's Document Summary page on the ASTM website.

[4] Available from SAE International (SAE), 400 Commonwealth Dr., Warrendale, PA 15096, http://www.sae.org.

J300 Engine Oil Viscosity Classification
J304 Engine Oil Tests *HS-23/00*

2.3 *Other ASTM Documents:*

Guidelines for Calibration[5]

The Lubricant Test Monitoring System, Sequence IIIH Test Control Chart Technique for Developing and Applying Severity Adjustments (SA)[6]

ASTM Deposit Rating Manual No. 20 (Formerly CRC Manual 20)[7]

2.4 *Other Standards:*

MIL-PRF-2104 Performance Specification: Lubricating Oil, Internal Combustion Engine, Combat/Tactical Service[8]

3. Terminology

3.1 *Definitions:*

3.1.1 *air-fuel ratio, n—in internal combustion engines*, the mass ratio of air-to-fuel in the mixture being induced into the combustion chambers. **D4175**

3.1.2 *automotive, adj*—descriptive of equipment associated with self-propelled machinery, usually vehicles driven by internal combustion engines. **D4175**

3.1.3 *blowby, n—in internal combustion engines*, that portion of the combustion products and unburned air/fuel mixture that leaks past piston rings into the engine crankcase during operation. **D4175**

3.1.4 *calibrate, v*—to determine the indication or output of a device (e.g., thermometer, manometer, engine) with respect to that of a standard. **D4175**

3.1.5 *calibrated test stand, n*—a test stand on which the testing of reference material(s), conducted as specified in the standard, provided acceptable test results.

3.1.5.1 *Discussion*—In several automotive lubricant standard test methods, the ASTM Test Monitoring Center provides testing guidance and determines acceptability. **D4175**

3.1.6 *cold-stuck piston ring, n—in internal combustion engines*, a piston ring that is stuck when the piston and ring are at room temperature, but inspection shows that it was free during engine operation.

3.1.6.1 *Discussion*—A cold-stuck piston ring cannot be moved with moderate finger pressure. It is characterized by a polished face over its entire circumference, indicating essentially no blowby passed over the outside of the ring during operation. **D4175**

3.1.7 *corrosion, n—the chemical or electrochemical reaction between a material*, usually a metal surface, and its environment that can produce a deterioration of the material and its properties. **D4175**

3.1.8 *engine oil, n*—a liquid that reduces friction or wear, or both, between the moving parts within an engine; removes heat, particularly from the underside of pistons; and serves as a combustion gas sealant for piston rings.

3.1.8.1 *Discussion*—It may contain additives to enhance certain properties. Inhibition of engine rusting, deposit formation, valve train wear, oil oxidation, and foaming are examples. **D4175**

3.1.9 *hot-stuck piston ring, n—in internal combustion engines*, a piston ring that is stuck when the piston and ring are at room temperature, and inspection shows that it was stuck during engine operation.

3.1.9.1 *Discussion*—The portion of the ring that is stuck cannot be moved with moderate finger pressure. A hot-stuck ring is characterized by varnish or carbon across a portion of its face, indicating that portion of the ring was not contacting the cylinder wall during engine operation. **D4175**

3.1.10 *lubricant test monitoring system (LTMS), n*—an analytical system in which ASTM calibration test data are used to manage lubricant test precision and severity (bias). **D4175**

3.1.11 *lubricant, n*—any material interposed between two surfaces that reduces the friction or wear, or both, between them. **D4175**

3.1.12 *mass fraction of B*, w_B, *n*—mass of a component B in a mixture divided by the total mass of all the constituents of the mixture.

3.1.12.1 *Discussion*—Values are expressed as pure numbers or the ratio of two units of mass (for example, mass fraction of lead is $w_B = 1.3 \times 10^{-6} = 1.3$ mg/kg). **D8047**

3.1.13 *Material Safety Data Sheet (MSDS), n*—a fact sheet summarizing information about material identification; hazardous ingredients; health, physical, and fire hazards; first aid; chemical reactivities and incompatibilities; spill, leak, and disposal procedures; and protective measures required for safe handling and storage. **http://www.msdssearch.com**

3.1.14 *non-reference oil, n*—any oil, other than a reference oil; such as a research formulation, commercial oil, or candidate oil. **D4175**

3.1.15 *oxidation, n*—of engine oil, the reaction of the oil with an electron acceptor, generally oxygen, that can produce deleterious acidic or resinous materials often manifested as sludge formation, varnish formation, viscosity increase, or corrosion, or a combination thereof. **D4175**

3.1.16 *quality index (QI), n*—a mathematical formula that uses data from controlled parameters to calculate a value indicative of control performance. **D4175**

3.1.17 *Quantity, n—in the SI*, a measurable property of a body or substance where the property has a magnitude expressed as the product of a number and a unit; there are seven, well-defined base quantities (length, time, mass, temperature, amount of substance, electric current, and luminous intensity) from which all other quantities are derived (for example, volume whose SI unit is the cubic metre).

3.1.17.1 *Discussion*—Symbols for quantities must be carefully defined; are written in italic font, can be upper or lower case, and can be qualified by adding further information in subscripts, or superscripts, or in parentheses (for example, t_{fuel} = 40 °C, where t is used as the symbol for the quantity Celsius

[5] Guidelines for Calibration can be found in the Lubricant Test Monitoring System, available from the Test Monitoring Center, http ://www.astmtmc.cmu.edu.

[6] Available at: ftp://ftp.astmtmc.cmu.edu.

[7] Available as stock #TMCMNL20 at www.astm.org, or contact ASTM Customer Service at service@astm.org.

[8] Available from U.S. Government Printing Office, Superintendent of Documents, 732 N. Capitol St., NW, Washington, DC 20401-0001, http://www.access.gpo.gov.

temperature and t_{fuel} is the symbol for the specific quantity fuel temperature). **D8047**

3.1.18 *reference oil, n*—an oil of known performance characteristics, used as a basis for comparison.

3.1.18.1 *Discussion*—Reference oils are used to calibrate testing facilities, to compare the performance of other oils, or to evaluate other materials (such as seals) that interact with oils. **D4175**

3.1.19 *standard test, n*—a test on a calibrated test stand, using the prescribed equipment according to the requirements in the test method, and conducted according to the specified operating conditions. **D4175**

3.1.20 *special parts supplier (SPS), n*—the manufacturer and supplier of many of the parts and fixtures used in this test method. **D7320**

3.1.21 *test oil, n*—any oil subjected to evaluation in an established procedure.

3.1.21.1 *Discussion*—It can be any oil selected by the laboratory conducting the test. It could be an experimental product or a commercially available oil. Often, it is an oil that is a candidate for approval against engine oil specifications (such as manufacturers' or military specifications, etc.) **D4175**

3.1.22 *test parameter, n*—a specified component, property, or condition of a test procedure.

3.1.22.1 *Discussion*—Examples of *components* are fuel, lubricant, reagent, cleaner, and sealer; of *properties* are density, temperature, humidity, pressure, and viscosity; and of *conditions* are flow rate, time, speed, volume, length, and power. **D4175**

3.1.23 *test procedure, n*—one where test parameters, apparatus, apparatus preparation, and measurements are principal items specified. **D4175**

3.1.24 *test stand, n*—a suitable foundation (such as a bedplate) to which is mounted a dynamometer, and which is equipped with a suitable data acquisition system, fluids process control system, supplies of electricity, compressed air, and so forth, to provide a means for mounting and operating an engine in order to conduct a Sequence IIIH engine oil test. **D7320**

3.1.25 *used oil, n*—any oil that has been in a piece of equipment (for example, an engine, gearbox, transformer, or turbine), whether operated or not. **D4175**

3.1.26 *varnish, n*—in internal combustion engines, a hard, dry, generally lustrous, deposit that can be removed by solvents but not by wiping with a cloth. **D4175**

3.1.27 *volume fraction of B*, φ_B, *n*—volume of component B divided by the total volume of the all the constituents of the mixture prior to mixing.

3.1.27.1 *Discussion*—Values are expressed as pure numbers or the ratio of two units of volume (for example, $\varphi_B = 0.012 = 1.2\ \% = 1.2$ cL/L). **D8047**

3.2 *Definitions of Terms Specific to This Standard:*

3.2.1 *build-up oil, n*—EF-411, non-compounded, ISO VG 32 (SAE 10) oil used in lubricating some of the Sequence IIIH parts during engine assembly.

3.2.2 *central parts distributor (CPD), n, n*—the manufacturer and supplier of many of the parts and fixtures used in this test method.

3.2.2.1 *Discussion*—Because of the need for rigorous inspection and control of many of the parts used in this test method, and because of the need for careful manufacture of special parts and fixtures used, companies having the capabilities to provide the needed services have been selected as the official suppliers for the Sequence IIIH test method. These companies work closely with the original parts suppliers, with the Test Procedure Developer, and with the ASTM groups associated with the test method to help ensure that the equipment and materials used in the method function satisfactorily. **D7320**

3.2.3 *reference oil test, n*—a standard Sequence IIIH engine oil test of a reference oil designated by the TMC.

3.2.4 *test procedure developer, n*—the group or agency which developed the Sequence IIIH test procedure before its standardization by ASTM, and which continues to be involved with the test in respect to modifications in the test method, development of Information Letters, supply of test parts, and so forth.

3.2.4.1 *Discussion*—In the case of the Sequence IIIH test, the Test Procedure Developer is the Chrysler Technology Center.

3.2.5 *test start, n*—introduction of test oil into the engine after the final assembly and mounting in the test stand. **D7320**

3.3 *Acronyms:*

3.3.1 ACC—American Chemical Society

3.3.2 AFR—air fuel ratio

3.3.3 APP—accelerator pedal position

3.3.4 AWG—American wire gauge

3.3.5 CCS—cold cranking simulator

3.3.6 CPD—central parts distributor

3.3.7 DAQ—data acquisition

3.3.8 dc—direct current

3.3.9 ECM—engine control module

3.3.10 ECU—electronic control unit

3.3.11 EOT—end of test

3.3.12 FCM—fluid conditioning module

3.3.13 FTIR—Fourier transform infrared

3.3.14 ICP-AES—inductively coupled plasma-atomic emission spectrometry

3.3.15 ID—internal diameter

3.3.16 LTMS—lubricant test monitoring system

3.3.17 M—the detergent metal with the highest concentration in the fresh oil

3.3.18 MRV—mini-rotary viscometer

3.3.19 MSDS—material safety data sheet

3.3.20 NM—not measured

3.3.21 OE—original equipment

3.3.22 PCM—powertrain control module

3.3.23 P/N—part number

3.3.24 PTFE—polytetrafluoroethylene

3.3.25 RTV Silicone—room temperature vulcanization silicone

3.3.26 SA—severity adjustment

3.3.27 SAE—Society of Automotive Engineers

3.3.28 SOT—start of test

3.3.29 SPS—special parts supplier

3.3.30 TAN—total acid number

3.3.31 TBN—total base number

3.3.32 TMC—Test Monitoring Center

3.3.33 TR—test result

3.3.34 TVTM——too viscous to measure

3.3.35 WPD—weighted piston deposit

3.4 *Quantity Symbols:*

3.4.1 F_C—corrected blowby flow rate (11.8.3)

3.4.2 F_M—measured blowby flow rate (11.8.3)

3.4.3 i—quantity measured in the test (10.4.6)

3.4.4 ip—intermediate precision limit (14.1.2.1)

3.4.5 L_i—the lower-specification limit for the measured quantity i (10.4.6)

3.4.6 n—the total number of data points taken (10.4.6)

3.4.7 p—pressure at the exit of the blowby canister (11.8.3)

3.4.8 P_{ret}—phosphorus retention (X2.5.1.3)

3.4.9 QI—quality index (10.4.6)

3.4.10 R—reproducibility limit (14.1.3.1)

3.4.11 S—estimated standard deviation (Table 7, footnote D)

3.4.12 t—Celsius temperature at the exit of the blowby canister (11.8.3)

3.4.13 U_i— the upper-specification limit for the measured quantity i (10.4.6)

3.4.14 $w(M_{EOT})$—mass fraction of metal M at EOT (X2.5.1.3)

3.4.15 $w(M_I)$—mass fraction of metal M in the initial oil sample (X2.5.1.3)

3.4.16 $w(P_{EOT})$—mass fraction of phosphorus in the EOT sample (X2.5.1.3)

3.4.17 $w(P_I)$—mass fraction of phosphorus in the initial oil sample (X2.5.1.3)

3.4.18 X_i—the recorded value for the measured quantity i (10.4.6)

4. Summary of Test Method

4.1 A Chrysler Pentastar V-6 test engine with a displacement of 3.6 L is disassembled, honed, solvent-cleaned, measured, and rebuilt using new parts installed as specified in this test method.

4.2 The engine is installed on a test stand equipped with an appropriate data acquisition system, the required fluids process control system, and all necessary accessories for controlling speed, torque, and various other operating test parameters.

4.3 The engine is charged with the test oil.

4.4 The engine is operated for an initial run-in period of 8 min to check all test stand operating systems and to establish a zero-hour, oil-level reading. An oil sample is also taken to allow the measurement of the initial oil viscosity.

4.5 The initial oil level in the oil pan is determined after the 8 min initial run-in, and subsequent oil-level calculations are determined during the oil-leveling period at the end of each 20 h segment.

4.6 Following the run-in and oil-leveling period of 8 min, the engine is ramped up to test conditions over a 5 min period, then operated under non-cyclic conditions, at moderately high-speed and torque, and at specified temperatures for 90 h, in four 20 h segments and one 10 h segment.

4.7 Used-oil samples are taken after the 8 min initial run-in, after each 20 h test segment and at the end of test (EOT); kinematic viscosity at 40 °C is determined for each of the six samples; the percentage change in viscosity of the five latter samples is determined relative to the viscosity of the first used-oil sample (8 min initial run-in).

4.8 The EOT sample is also used to determine the apparent viscosity in the minirotary viscometer (which is required for the nonmandatory Sequence IIIHA test) and the phosphorus retention of the test lubricant after 90 h Sequence IIIH test operation (which is required for the nonmandatory Sequence IIIHB test).

4.9 At the conclusion of the test, the engine is disassembled and the parts are visually rated to determine the extent of deposits formed.

5. Significance and Use

5.1 This test method was developed to evaluate automotive engine oils for protection against oil thickening and piston deposits during moderately high-speed, hightemperature service.

5.1.1 The increase in kinematic viscosity of the oil indicates the tendency of an oil to thicken because of oxidation. In automotive service, such thickening can cause oil pump starvation and resultant catastrophic engine failures.

5.1.2 The deposit ratings for an oil indicate the tendency for the formation of deposits throughout the engine, including those that can cause sticking of the piston rings in their grooves. In automotive service, such ring sticking can cause a loss of compression pressures in the engine.

5.2 The test method was developed to correlate with oils of known good and poor protection against oil thickening and piston deposits. Specially formulated oils that produce less than desirable results with unleaded fuels were also used during the development of this test.

5.3 The Sequence IIIH engine oil test has been recommended as a replacement for the Sequence IIIG test and is expected to be used in specifications and classifications of engine lubricating oils, such as the following:

5.3.1 Specification D4485.

5.3.2 Military Specification MIL-PRF-2104.

5.3.3 SAE Classification J183.

6. Apparatus

6.1 *Laboratory*—Observe the following laboratory conditions to ensure good control of test operations and good repeatability:

6.1.1 Maintain the ambient laboratory atmosphere relatively free of dirt, dust, and other contaminants.

6.1.2 Filter the air in the engine build-up area, and control its temperature and humidity to prevent accumulation of dirt or rust on engine parts.

6.1.3 If an engine is assembled in an area of controlled environment and moved to a non-controlled area, provide suitable protection of the engine so that moist air cannot enter the engine and promote rusting before the test.

6.1.4 A fan is required to be installed to direct air flow on or near the electronic components in the exhaust system; but air (hot or cold) is not permitted to be directed onto other engine surfaces during test operation.

6.2 *Specified Equipment:*

6.2.1 Use the equipment specified in the procedure (see Tables 1-3) whenever possible. Substitution of equivalent equipment is allowed, but only after equivalency has been proven to the satisfaction of the TMC, the Test Procedure Developer (see 3.2.4.1) and the ASTM Sequence IIIH Surveillance Panel.

6.2.2 Do not use heat lamps or fans directed at the engine and do not use insulation on the engine for oil or coolant temperature control.

6.2.2.1 For operator safety and the protection of test components, the use of shielding and insulation on the exhaust system may be incorporated downstream of the oxygen sensor elbow.

6.2.2.2 To minimize the temperature effects on electronic components near the exhaust system, place a fan with an output less than 140 L/s at the front of the engine with the air flow directed toward the exhaust pipes, parallel to the driveshaft. Place fan at a minimum of 35 cm from the centerline of the harmonic balancer.

6.2.3 For operator safety and the protection of test components, the use of shielding and insulation on the exhaust system may be incorporated downstream of the oxygen sensor elbow.

6.3 *Drawings*—Obtain the equipment drawings referenced in Table 1 from the TMC. Because the drawings may not be to scale or may not contain dimensions, when using them to fabricate special parts, do not use a dimensionless drawing as a pattern. Drawings supplied with dimensions are considered to be correct when the temperature of the equipment is 22 °C ± 3 °C, unless otherwise specified.

6.4 *Test Engine:*

6.4.1 The test engine is based on a Chrysler 2014 Pentastar V-6 engine[9,10] with a displacement of 3.6 L, a compression ratio of 10.2:1, equipped with a production fuelinjection system and a special PCM for test-specific dynamometer operation. The variable valve timing is disabled by the use of fixed phasers in place of the production cam phasers. Complete

[9] The sole source of supply of this equipment known to the committee at this time is FCA US LLC, P.O. Box 21-8004, Auburn Hills, MI 48321-8004, USA, Tel: 1-800 334 9200, fcanorthamerica.com.

[10] If you are aware of alternative suppliers, please provide this information to ASTM International Headquarters. Your comments will receive careful consideration at a meeting of the responsible technical committee,[1] which you may attend.

TABLE 1 Control-System/Engine-Interface Components

Component Description	Part Number	Supplier[A]
Pump, water, modified, Seq. IIIH Chrysler	OHT3H-300-1	OH Technologies
Coolant crossover, Seq. IIIH Chrysler	OHT3H-302-1	OH Technologies
Adapter, coolant crossover, Seq. IIIH Chrysler	OHT3H-303-1	OH Technologies
Jumper, harness segment, throttle control, Seq. IIIH Chrysler[B]	OHT3H-004-1	OH Technologies
Harness, dyno, Seq. IIIH Chrysler	OHT3H-005-1	OH Technologies
Exhaust turndown pipe drawings	IIIH-ETB30-B	TMC
	IIIH-ETB31-B	
	IIIH-ETB32-B	
	IIIH-ETB40-B	
	IIIH-ETP42-B	
Air cleaner (optional)	04861729AB	Chrysler Dealer
Air resonator	04861731AB	Chrysler Dealer
Air hose (optional)	04861732AB	Chrysler Dealer
Throttle pedal (optional)	68043161AB	Chrysler Dealer
Electric starter (optional if air starter is used)	56029852AA	Chrysler Dealer
O_2 sensor	56029050AA	Chrysler Dealer
Powertrain control module (PCM)	IMTS161000UC-PCM	International Machine Tool & Service (IMTS)[C]
Manual flywheel (2013 JK)	05184438AB	Chrysler Dealer
J-TEC blowby meter	VF563AA	J-Tec Associates, Inc.
Blowby canister	CCV6000	J-Tec Associates, Inc.
Dynamometer	Midwest 1014A	Dyne Systems
Driveshaft w/1410 U-Joints[D]		

[A] Contact information for the suppliers is given in Appendix X3.

[B] Alternatively an accelerator pedal position (APP) sensor simulator circuit may be used as described in Annex A11.

[C] The sole source of supply known to the committee at this time is International Machine Tool & Service (IMTS) Co., 8460 Ronda Dr., Canton, MI 48187, USA, www.imtsind.com. If you are aware of alternative suppliers, please provide this information to ASTM International Headquarters. Your comments will receive careful consideration at a meeting of the responsible technical committee,[1] which you may attend.

[D] Available through local suppliers.

TABLE 2 Engine-Build Parts List

Part Name	Quantity per Test	Part Number	Required Supplier[A]
Test engine, 2014 3.6L Pentastar RT	1	682524464AG (older version 05184464AH)	Mopar
Cylinder head – Left[B] (MS Seed/MC Core)	1	LH451AO-MSD	International Machine Tool & Service (IMTS)
Cylinder head – Right[B] (MS Seed/MC Core)	1	RH516AO-MS	International Machine Tool & Service (IMTS)
Piston, special test	6	OHT3H-070-1	OH Technologies, Inc.
Head gasket, right	1	05184456AH	Chrysler Dealer
Head gasket, left	1	05184455AI	Chrysler Dealer
Head bolts	8	06509564AA	Chrysler Dealer
Rod bolts	12	06509128AA	Chrysler Dealer
Exhaust flange gasket (cylinder head to exhaust)	2	68093232AA	Chrysler Dealer
Piston ring pack:	1		OH Technologies, Inc.
Ring, special test, UCR (0.025 mm gap, 96.040 mm bore)		3H96040-TOP	OH Technologies, Inc.
Ring, special test, LCR (0.035 mm gap, 96.040 mm bore)		3H96040-SECOND	OH Technologies, Inc.
Expander, Seq. IIIH		3H96040-EXP	OH Technologies, Inc.
Rail, Seq. IIIH		3H96040-RAIL	OH Technologies, Inc.
Pin, wrist, piston	6	OHT3H-071-1	OH Technologies, Inc.
Clip, piston, wrist pin	12	OHT3H-072-1	OH Technologies, Inc.
Phaser, intake (fixed at 100°, less rotor holes)	2	OHT3H-001-1	OH Technologies, Inc.
Phaser, exhaust (fixed at 112°, less rotor holes)	2	OHT3H-002-1	OH Technologies, Inc.
Oil pan[C]	1	OHT3H-304-2	OH Technologies, Inc.
Gasket, Oil Pan	1	OHT3H304-18	OH Technologies, Inc.
Seal, Valve Guide	24	5184168AB	Chrysler Dealer

[A] Contact information for the suppliers is given in Appendix X3.
[B] All cylinder head purchases require a core exchange from each test engine.
[C] Oil pan and plug may be used for multiple tests. Replace at the discretion of the laboratory either upon failure of pressure check or visual inspection.

TABLE 3 Recommended Control Parts for the FCM

Part Name	Supplier[A]	Part Number	Description
2-way coolant flow control valve	Badger Meter Inc.	9003GCW36SV3A29L36	2 in., 2-way air to close. Alternatively, a variable frequency drive (VFD) may be used instead of a 2-way valve to control pump speed and coolant flow. If necessary, a flow restrictor may be incorporated in place of the 2-way valve to achieve the required system pressure.
Heat exchanger	Kinetic Engineering Corp.		Tube and shell heat exchanger is an acceptable alternative.
Coriolis flow meter	Micro Motion Inc.	R200S418NCAMEZZZ Z meter, 1700I13ABMEZZZ transmitter	Any other meter used shall meet or exceed a mass flow accuracy of ±0.75 % and mass flow repeatability of ±0.50 %.
Fuel temperature heat exchange	Laboratory determined		
3-way coolant temperature control valve	Badger Meter Inc.	9003TCW36SV3AXXL36	2 in., globe cast 3-way wafer type, NPT 316/316L stainless steel body size 35, actuator, air to close, 3 spring for a 3 psi to 15 psi signal range. Alternatively, the use of the 3-way valve is not required if control of process water flow through the main engine coolant heat exchanger is maintained using a suitable 2-way valve (see Fig. 1).
Oil temperature control valve	Badger Meter Inc.	1002GCN36SVCSALN36	½ in. 2-way Research valve, A-trim
Drive shaft			Driveshaft w/1410 U-Joints
Coolant pump	Aurora	341A BF 1.5X2X9	

[A] Contact information for the suppliers is given in Appendix X3.

test engines are available for purchase from Mopar.[11,10] Each test will consist of a single, new complete test engine that will be assembled according to the Sequence IIIH Engine Assembly Manual.[12]

6.4.2 *Engine Parts*—Use the engine parts specified in the Sequence IIIH Engine Assembly Manual.[12]

6.4.3 Refer to Table 2 for a complete list of parts required to assemble the test engine.

6.4.4 Use all engine parts as received from the supplier, central parts distributor (CPD), special parts supplier (SPS), or original equipment manufacturer unless modifications are specified in this test method or the Sequence IIIH Engine Assembly Manual.

6.4.5 Before disposing of any Sequence IIIH engine parts, destroy or otherwise render them useless for automotive engine applications.

6.5 *Engine Speed and Torque Control*—Use dynamometer speed and torque control systems that are capable of controlling the speed and torque requirements described in 10.4.

6.6 *Fluid Conditioning Module (FCM):*

[11] Mopar is the registered trade mark of Chrysler Group Customer Care, P.O. Box 21-8004, Auburn Hills, MI 48321-8004, www.mopar.com.

[12] Available from the TMC at ftp://ftp.astmtmc.cmu.edu/docs/gas/sequenceiii/procedure_and_ils/IIIH.

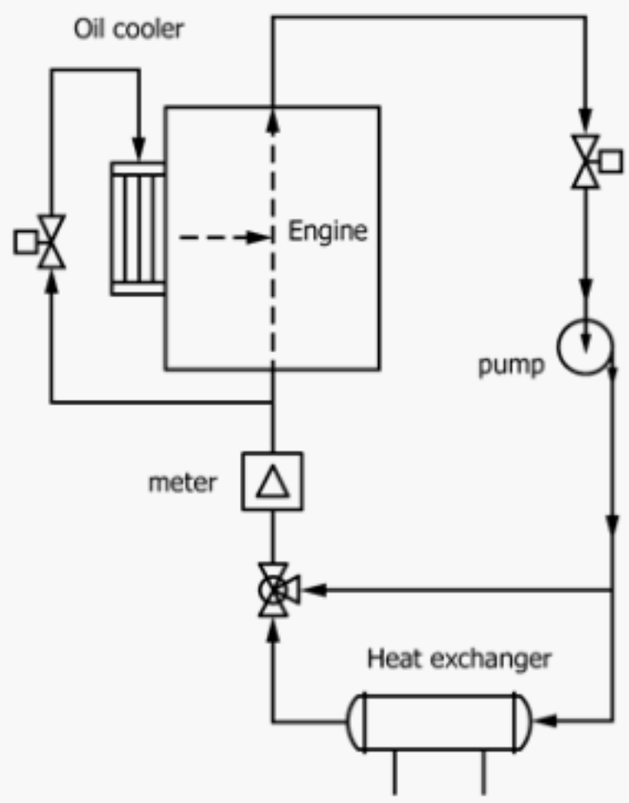

FIG. 2 Schematic of Flow System for Engine Coolant Using a Three-Way Control Valve to Maintain Coolant Flow

6.6.1 *General*—The FCM controls the following test parameters: flow rate and temperature of the engine coolant, coolant flow rate through the engine oil cooler, and the test fuel supply. The components for this module are shown in Table 3.

6.6.2 *Engine Cooling System*—The FCM supplies coolant pressurized to 200 kPa, at a flow rate of 170 L/min and controls the coolant temperature at 115 °C at the engine coolant outlet. The system incorporates the following features: pump, Coriolis-type flow meter, flow-control and three-way-control valves (not required for alternative system, see Fig. 1), external cooling system, and low-point drains.

6.6.2.1 The system integrates with the test stand data acquisition and control computer for process control and maintains the specified engine coolant temperature and flow.

6.6.2.2 Schematics of the required flow system for the engine coolant are shown in Figs. 1 and 2.

6.6.2.3 A complete list of acceptable control system/engine interface components is shown in Table 1.

6.6.2.4 A list of parts for the engine coolant flow system control equipment is shown in Table 3.

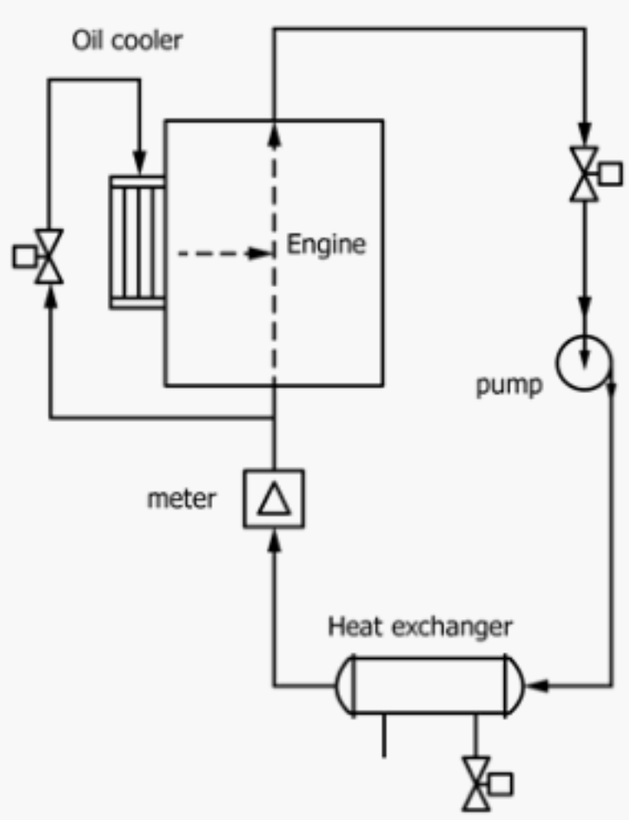

FIG. 1 Schematic of Flow System for Engine Coolant Flow Removing the Three-Way Valve and Controlling Coolant Temperature Using a Two-Way Valve at the Heat Exchanger

6.6.2.5 Install a 3 kΩ resistor across the temperature sensor for the engine coolant to allow the PCM to receive an appropriate signal voltage to run the engine without the need to plug in the sensor wire on the wiring harness.

6.6.2.6 Flush the coolant system for the test stand with clean water at least once each reference period.

6.7 *Engine-Oil Cooling System*—The FCM controls engine-oil temperature by controlling the flow of engine coolant through the production oil cooler with the use of a 2-way, flow-control valve.

6.7.1 Do not use cuprous lines or fittings in the oil cooling system.

6.7.2 Do not use magnetic plugs in the oil system.

6.8 *Fuel System*—The FCM includes a pressure regulator to provide fuel at 420 kPa ± 20 kPa. Maintain fuel temperature at 30 °C throughout the test.

6.9 *Induction Air System*—Maintain the throttle body intake air at a moisture content of 11.4 g/kg ± 0.7 g/kg of dry air, a dry bulb temperature of 35 °C ± 2 °C, dew point of 16.1 °C and a static pressure of 0.050 kPa. Measure air-intake temperature and pressure at the air resonator (Chrysler P/N (part number) 04861731AB)[9,10] in the center of flow 7 mm from the opening as shown in Fig. A2.1.

6.10 *Pressure-Transducer Locations:*

6.10.1 *Coolant Pressure*—Connect the transducer to the modified coolant crossover adapter P/N OHT3H303-1.[13,10] Transducers with a gauge pressure range of 0 kPa to 300 kPa have been found to be suitable.

6.10.2 *Intake Air Pressure*—Install the transducer to the location shown in Fig. A2.1 and Fig. A2.5. Transducers with a gauge pressure range of –125 Pa to +125 Pa have been found to be suitable.

6.10.3 *Right- and Left-Exhaust Backpressure*—Insert probe into the exhaust turndown pipes (see TMC drawing IIIH-ETP40-B[14] position 4). Transducers with a gauge pressure range of 0 kPa to 70 kPa have been found to be suitable.

6.10.4 *Oil-Pump Pressure*—Connect the transducer to the location shown in Fig. A2.8. Transducers with a gauge pressure range of 0 kPa to 700 kPa have been found to be suitable.

6.10.5 *Oil-Gallery Pressure*—Connect the transducer to the location shown in Fig. A2.6. Transducers with a gauge pressure range of 0 kPa to 700 kPa have been found to be suitable.

6.10.6 *Manifold Absolute Pressure*—Connect the transducer to the vacuum port on top of the throttle body and behind the throttle plate. Transducers with an absolute pressure range of 0 kPa to 100 kPa have been found to be suitable.

6.10.7 *Fuel Pressure*—Mount a fuel-distribution block to the front of the engine within 30 cm of the fuel-rail inlet as shown in Fig. A2.4. Russell Performance P/N RUS-650370[15,10] (shown in Fig. A2.5) has been found to be suitable

[13] The sole source of supply of the apparatus known to the committee at this time is OH Technologies Inc., P.O. Box 5039, Mentor, OH 44061-5039, USA, www.ohtech.com.

[14] Available from the TMC, 6555 Penn Avenue, Pittsburgh, PA 15206-4489. www.astmtmc.cmu.edu.

[15] Available from Summit Racing Equipment, P.O. Box 909, Akron, OH 44309–0909, tel 1-800-230-3039, www.summitraciung.com.

for fuel-pressure and temperature measurements. Transducers with a gauge pressure range of 0 kPa to 700 kPa have been found to be suitable.

6.10.8 *Crankcase Pressure*—Connect the transducer port tapped in the upper portion of the oil pan P/N OHT3H-304-2.[13,10] Transducers with a gauge pressure range of –13 kPa to +13 kPa have been found to be suitable.

6.10.9 *Blowby Pressure*—Install a transducer in the blowby-ventilation system at the exit of the blowby canister. Maintain a minimum length of 20 times the pipe diameter between the thermocouple and the J-TEC meter (see A4.1). Transducers with a gauge pressure range of –13 kPa to +13 kPa have been found to be suitable.

6.11 *Thermocouple Locations:*

6.11.1 Locate the sensing tip of all thermocouples in the center of the stream of the medium being measured unless otherwise specified.

6.11.2 *Temperature of Oil Cooler*—This thermocouple is optional. If used, install in the rear of the oil cooler as shown in Fig. A2.6 and Fig. A2.7. Ensure the sensing tip is in the middle of the flow by fully inserting the sensing tip and reversing it out by 8 mm.

6.11.3 *Temperature of Coolant Exiting the Engine*—Install the thermocouple in the coolant crossover P/N OHT3H-302-1[13,10] with the sensing tip centered in the coolant flow.

6.11.4 *Temperature of Intake Air*—Install the thermocouple through top of the air resonator, 7 cm from the edge where it joins the throttle body (see Fig. A2.3). Center the sensing tip in the center of the air flow.

6.11.5 *Fuel Temperature*—Install the thermocouple in a fuel-distribution block within 30 cm of the fuel- rail inlet (see 6.10.7). (**Warning—**Safety Hazard—Exercise care to reduce overhung masses at fuel-rail connections.)

6.11.6 *Oil-Pump Temperature*—Install the thermocouple in the oil-pump pressure/temperature assembly as shown in Fig. A2.8. Use a straight-thread plug and washer with a through hole no larger than 6 mm. A screw plug M24 × 1.5 (P/N HAR111.301.127.E) with an aluminum washer (P/N HAR 22 × 7 × 1.5 Al) has been found to be suitable.[16,10]

6.11.7 *Oil-Sump Temperature*—Install the thermocouple in the oil-sump drain plug located on the underside of the oil pan P/N OHT3H-304-2,[13,10] the sensing tip extending 10 mm beyond the end of the sump drain plug as shown in Fig. A2.9.

6.11.8 *Engine-Block Oil Temperature*—Refer to Section 4, Sheets 1 to 4, of the IIIH Engine Assembly Manual for the modification of the block required to accommodate the engine-block, oil-temperature thermocouple. To ensure the thermocouple is inserted to the correct depth, use the IMTS Thermocouple Setting Fixture P/N 151132-F002.[17,10]

6.11.9 *Temperature of Coolant Into the Engine*—Install the thermocouple in the modified water pump P/N OHT3H-300-1[13,10] with the sensing tip centered in the coolant flow.

6.11.10 *Right-Exhaust Temperature*—Install thermocouple in the exhaust turndown pipe (drawing IIIH-ETP30-B[14]) with the sensing tip centered in the exhaust flow

6.11.11 *Left-Exhaust Temperature*—Install thermocouple in the exhaust turndown pipe (drawing IIIH-ETP30-B[14]) with the sensing tip centered in the exhaust flow.

6.11.12 *Blowby-Gas Temperature*—Install the thermocouple in the blowby ventilation system at the exit of the blowby canister. Maintain a minimum length of 20-pipe diameters between the thermocouple and the meter (see A4.1).

6.12 *Crankcase Ventilation:*

6.12.1 Ventilate blowby gasses ventilated from the test cell through a scavenger fan. Do not allow the fan to create a vacuum on the crankcase. Do not insulate any components in the blowby system. An Air Ecology Evacuation System[18,10] has been found to be suitable. The crankcase ventilation configuration is shown in Annex A3.

7. Reagents and Materials

7.1 *Test Fuel*—Use only Sequence III HF-003 EEE unleaded fuel.[19,10] (**Warning—**Flammable. Health hazard.) The required fuel properties and tolerances are shown in Table A12.1.

7.1.1 Make certain that all tanks used for transportation and storage are clean before filling with test fuel.

7.1.2 Ensure that at least 3450 L of test fuel is available.

7.2 *Engine Coolant:*

7.2.1 Use a mixture of ShellZone DEX-COOL antifreeze/coolant[20,21] and de-ionized water with a volume fraction of water of 50 %. (**Warning—**Health hazard—see appropriate MSDS).

7.2.1.1 Use new coolant for every test.

7.2.1.2 *Coolant Preparation*—Use a container of a size adequate to hold the entire coolant blend required for the system.

7.2.1.3 Measure equal parts of coolant and deionized water. Verify with a refractometer that the volume fraction of coolant in the mixture is between 48 % and 52 % coolant prior to each use.

7.2.2 Alternatively, a 50/50 premix[21] may be purchased for use if desired.

7.3 *Degreasing Solvent*—Use only mineral spirits meeting the specifications for volume fraction of aromatics 0 % to 2 %, flash point 61 °C minimum, and color not darker than +25 on Saybolt Scale or 25 on Pt-Co Scale from Specification D235 for the Type II, Class C mineral spirits. (**Warning—**Combustible. Health hazard.)

7.4 *Sealing and Anti-Seize Compounds*—Mopar ThreeBond Engine RTV;[22] P/N 68082860AA[23] Room Temperature Vulcanization Silicone (RTV silicone).[23]

[16] Patrick Motor Sports, 4025 E. Madison St., Phoenix, AZ, 85034, USA, www.patrickmotorsports.com.

[17] The sole source of supply known to the committee at this time is International Machine Tool & Service (IMTS) Co., 8460 Ronda Dr., Canton, MI 48187, USA, www.imtsind.com.

[18] Purchase from AER Control Systems, 90 River St., New Haven , CT 06513, www.aercontrolsystems.com.

[19] The sole source of supply of this fuel known to the committee at this time is Haltermann Products, 1201 Sheldon Rd., P.O. Box 429, Channelview, TX 77530–0429, USA.

[20] ShellZone is a registered trademark of Shell Trademark Management BV.

[21] Available from retailers, autoparts stores, or any Mopar dealer.

[22] ThreeBond is a registered trademark of ThreeBond International, Inc.

7.4.1 Loctite[24] 545 Thread Sealant, Anaerobic.[25,10]

7.4.2 Loctite 567 Thread Sealant, Low strength, Anaerobic.[25,10]

7.4.3 Loctite 648 Retaining Compound, Anaerobic.[25,10]

7.4.4 Loctite Gasket Sealant 2 (Permatex #2).[25,10]

7.4.5 Polytetrafluoroethylene (PTFE) Tape.

7.5 *Engine Cleaning:*

7.5.1 Use Ultrasonic-7[26] soap and Ultrasonic-B degreaser[26] in ultrasonic parts washers to clean engine block, cylinder heads and fixed phasers. Cleaning solution shall be at a temperature of 65 °C ± 5 °C.

7.5.2 Alternatively, use a 50/50 Brulin US Solution[27,10] of 815 GD and 815 QR-DF with a volume fraction of 12.5 % provided that the laboratory has conducted a successful reference oil test using this solution.

7.6 . Engine build up oil, EF-411.[28,10]

8. Test Oil Requirements

8.1 *Selection*—The supplier of the test oil sample shall determine that the test oil sample is representative of the lubricant formulation to be evaluated and that it is not contaminated.

8.2 *Quantity*—The supplier shall provide a test oil sample of at least 7.5 L.

8.3 *Storage Prior to Test*—The test laboratory shall store the test oil sample in a covered building to prevent contamination by rainwater (see also A5.3).

9. Preparation of Apparatus

9.1 *Pre-Test Engine Disassembly and Cleaning:*

9.1.1 Disassemble the new engine according to the guidelines in Section 3 of the New Engine Disassembly of the Sequence IIIH Engine Assembly Manual.[12]

9.2 *Cylinder-head Disassembly:*

9.2.1 Disassemble the production cylinder heads according to information supplied in Sections 2 and 3 of the Sequence IIIH Engine Assembly Manual.[12]

9.2.2 Send the disassembled, production cylinder heads (cylinder head cores) to the SPS for replacement of intake valve-seats.[17,10] See Section 2 Sheet 2 of the Sequence IIIH Engine Assembly Manual for details.

9.2.3 Clean the test cylinder heads as outlined in Sections 5 and 6 of the Sequence IIIH Engine Assembly Manual.

9.2.4 Assemble the modified cylinder heads P/N LH451AO-MS and RH516AO-MSD[17,10] from new engine cylinder heads. See Section 6 of the Sequence IIIH Engine Assembly Manual.

9.2.5 Use new valve-stem seals for each test.

9.3 *Block Preparation:*

9.3.1 Refer to Sections 4 and 7 of the Sequence IIIH Engine Assembly Manual for oil gallery modifications and thermocouple drilling procedures.

9.3.2 Refer to Section 4 of the Sequence IIIH Engine Assembly Manual for honing procedure.

9.4 *Oil-pump Cleaning:*

9.4.1 Refer to Section 5 of the Sequence IIIH Engine Assembly Manual for special cleaning information of the factory engine-oil pump.

9.5 *Oil-cooler Cleaning:*

9.5.1 Refer to Section 5 of the Sequence IIIH Engine Assembly Manual for special cleaning information of the factory engine-oil filter/oil cooler assembly.

9.6 Clean all remaining engine parts with degreasing solvent to remove all traces of factory engine oil.

9.7 *Test-Engine Assembly:*

9.7.1 Refer to the Sequence IIIH Engine Assembly Manual for engine build instructions. Table 2 contains a list of all parts required for the test engine build.

9.7.2 Laboratories shall maintain engine-build data sheets as shown in Annex A8. This data shall be available to the TMC and the Test Sponsor (see 3.2.4.1) for investigative studies as deemed necessary for hardware investigations during times of industry severity shifts or other problems.

9.8 *Test Stand Preparation:*

9.8.1 For every test, replace the tubing (for example, Tygon[29] or equivalent) that vents the crankcase gasses from the rocker cover (see Fig. A2.4).

9.8.2 Flush all oil-pressure lines with solvent and dry with shop air prior to the start of each test.

9.8.3 Charge the coolant system with the coolant/water mixture, cycle the coolant flow pump on and off in 5 min intervals while cycling all two-way and three-way control valves to eliminate any trapped air from the system for a minimum of 20 min prior to starting any Sequence IIIH Test.

10. Calibration

10.1 *Calibration Procedures*—Annex A5 describes calibration procedures using the TMC reference oils, including their storage and conditions of use, the conducting of tests, and the reporting of results. Determine the acceptability of a reference oil test according to the Lubricant Test Monitoring System (LTMS) (see 3.1.10).

10.1.1 The effective date of a reference test is the LTMS date and time of the reference test.

10.1.2 Test start time is defined as the introduction of the reference oil into the engine.

[23] Available from any Mopar dealer.

[24] Loctite is a registered trademark of Henkel Corporation.

[25] Available from Henkel. Corporation, One Henkel Way, Rocky Hill, CT 06067, USA. www henkelna.com.

[26] Available from TEI, 12718 Cimarron Path, San Antonio, TX 78249, USA, Tel: (210) 690-1958.

[27] The sole source of supply of this product known to the committee at this time is Brulin & Company, 2920 Dr. Andrew J. Brown Av, Indianapolis, IN 46205, 317.923.3211. csr@brulin.com.

[28] The sole source of supply of this product known to the committee at this time is Exxon-Mobil Oil Corp., Attention Illinois Order Board, P.O. Box 66940, AMF O'Hare, IL 60666, USA.

[29] Tygon is a registered trademark of Saint-Gobain Corporation.

10.2 *Maintenance Activities*—Annex A6 describes maintenance activities involving TMC reference oils, including special reference oil tests, special use of the reference oil calibration system, donated reference oil test programs, introducing new reference oils, and TMC information letters and memoranda.

10.3 *Related Information*—Annex A7 provides information regarding new laboratories, the role of the TMC regarding precision data, and the calibration of test stands used for non-standard tests.

10.4 *Data Acquisition System:*

10.4.1 The Sequence IIIH test requires the use of computerized data acquisition and control for all measured and controlled quantities outlined in this procedure. The system chosen by individual testing laboratories shall be capable of integrating with the Sequence IIIH process controller for many of these operations. The system shall also be capable of meeting or exceeding certain test-specific performance requirements for maximum allowable response times and minimum allowable sample rates. In addition to the aforementioned requirements, the system shall also be capable of data logging to test specific archival files for each test quantity at minimum allowable record intervals, that is, no greater than 2 min intervals between successive logs for each quantity. See the Data Acquisition and Control Automation II Task Force Report (DACA II)[30] and additional requirements as outlined in this procedure.

10.4.2 *Sample Rate*—The preferred sample rate is 100 Hz with the minimum allowable sample rate for the Sequence IIIH data acquisition and control system set at 1 Hz.

10.4.3 *Measurement Accuracy*—All measurement devices used for sensing speed, force, flow, pressure, and temperature shall meet the minimum requirements as outlined in the DACA II report[30] and also conform to total system response requirements as outlined by the TMC (see 10.4.5).

[30] Available at: http://ftp.astmtmc.cmu.edu/docs/TechnicalGuidanceCommittee/minutes/BestPractices/DACA_II_Data%20Acquisition%20and%20Control%20Automation.pdf.

10.4.3.1 *Pressure Measurements*—For pressures >6.9 kPa, use only measuring devices with a full-scale accuracy of ±0.2 % for capacitive systems and ±0.25 % for strain-type systems. For pressures <6.9 kPa, use only devices with an accuracy of ±15 Pa for capacitive systems and ±14 Pa for strain-type systems. Refer to Table 4 for a list of controlled and uncontrolled pressures.

10.4.3.2 *Temperature Measurements*—Use only Type E chromel-constantan or Type J iron-constantan thermocouples with an accuracy of ±0.5 °C over a range of 0 °C to 200 °C. Refer to Table 4 for a list of controlled and uncontrolled temperatures.

10.4.3.3 *Flow*—For Coriolis flow meter measurements use a mass-flow accuracy of ±0.50 %, and massflow repeatability of ±0.05 %.

10.4.3.4 *Speed*—For speeds measured by frequency, use an accuracy of ±1 r/min.

10.4.3.5 *Force*—For forces measured by strain gauge, use an accuracy of ±0.25 % of full scale.

10.4.4 *Measurement Resolution*—The minimum resolution for all test quantities shall be at least 25 % of the required system accuracy for that quantity. For example, if a test procedure requires an accuracy of 1.0 unit, then the minimum resolution for that quantity is 0.25 unit.

10.4.5 *System Time Response*—Total system time response is the time required for the complete data acquisition system including all filtering, transducer lines, and surge tanks to measure a step change input for a given quantity. Determine system response times by measuring the time required to reach a certain percentage of an imposed step change. For first order systems, use the time to 63.2 % of the imposed step change; for moving average systems use the time to 45.4 % of the imposed step change.

10.4.5.1 See the TMC System Time Response Measurement Guidelines for methods of imposing step changes for calibration of Sequence IIIH test stands.

10.4.5.2 Maximum allowable system time responses for the data acquisition system are listed in Table 5.

10.4.6 *Quality Index*—Use of the quality index method of measuring the control capability of the test stand is required for

TABLE 4 Controlled and Uncontrolled Test Quantities

CONTROLLED QUANTITIES				UNCONTROLLED QUANTITIES		
Quantity	Units	Target	QI values	Quantity	Units	Average
Speed	r/min	3900	±5	Oil-pump temperature	°C	Record
Load	N·m	250	±0.98	Oil-sump temperature	°C	Record
Oil-block temperature	°C	151	±0.42	Coolant-in temperature	°C	Record
Coolant-out temperature	°C	115	±0.46	Left-exhaust temperature	°C	Record
Intake-air temperature	°C	35	±0.37	Right-exhaust temperature	°C	Record
Fuel temperature	°C	30	±1.0	Oil-pump pressure	kPa (gauge)	Record
Dew point	°C	16.1	±2	Oil-gallery pressure	kPa (gauge)	Record
Intake-air pressure	kPa (gauge)	0.05	±0.02	Manifold pressure	kPa (absolute)	Record
Right-exhaust pressure	kPa (gauge)	4.5	±0.08	Fuel pressure	kPa (gauge)	Record
Left-exhaust pressure	kPa (gauge)	4.5	±0.08	Crankcase pressure	kPa (gauge)	Record
Coolant flow rate	L/min	170	±1.43	Right-bank AFR[B]		Record
Fuel Pressure	kPa (gauge)	420	±20[A]	Left-bank AFR[B]		Record
Coolant pressure	kPa (gauge)	200	±10[A]	Mass fraction NO_x right bank	mg/kg	Record
				Mass fraction NO_x left bank	mg/kg	Record
				Fuel flow rate	kg/h	Record

[A] This is a range rather than a QI value. QI calculations do not apply.
[B] Air fuel ratio (AFR).

TABLE 5 Maximum System Time Response

NOTE 1—For controlled (QI) Quantities Only.

Quantity	Time, s
Speed	0.10
Torque	0.60
Coolant flow	8.0
Intake air pressure	0.75
Exhaust backpressure	1.20
Temperatures	2.40

certain quantities. Use Eq 1 to calculate the quality index with a minimum of 2700 data points for the EOT values:

$$QI = 1 - \frac{1}{n}\Sigma\left(\frac{U_i + L_i - 2X_i}{U_i - L_i}\right)^2 \quad (1)$$

where:

QI = the symbol for quality index,
i = the quantity measured in the test,
X_i = the recorded value for the measured quantity i,
U_i = the upper-specification limit for the measured quantity i,
L_i = the lower-specification limit for the measured quantity i, and
n = the total number of data points taken as determined from test length and procedural specified sampling rate.

10.4.7 The upper and lower values used for quality index calculations for the required quantities are listed in Table 4.

10.4.8 Calculate Quality Index (QI) for all control parameters in accordance with the DACA II report. Account for missing or bad quality data in accordance with the DACA II report. Use the values listed in Table 6 for over/under range values where appropriate.

10.4.9 Calibrate the stand instrumentation used for data acquisition and control on all controlled and non-controlled quantities (see Table 4) every six months.

10.4.10 As a minimum, calibrate the following quantities prior to every reference test sequence, unless the required six-month calibration was completed within 60 days prior to reference test start: engine speed, dynamometer torque, engine coolant flow, engine coolant out thermocouple, main oil gallery thermocouple.

10.4.11 Calibrate the intake air-humidity system at least every six months.

10.5 *Test Numbering System:*

10.5.1 *Acceptable Tests*—The format AAA-BB-CCC is utilized for numbering tests. AAA represents the test stand number. BB represents the number of tests since last reference. CCC represents the total number of tests on the stand.

10.5.1.1 As an example, 6-10-175 represents stand number 6; 10, the tenth test since the last reference; and 175, the number of tests conducted on that stand.

10.5.1.2 Consecutively number all tests on a given stand.

10.5.2 *Unacceptable or Aborted Tests*—If a calibration test is aborted or the results are outside the acceptance limits, include a letter suffix after the CCC portion of the test numbering format.

10.5.2.1 Begin the suffix with the letter A and continue alphabetically until a calibration test is completed within the acceptance limits. For example, if three consecutive unacceptable calibration tests are completed on the same test stand, and the first test is 6-10-175, the next two test numbers would be 6-10-175A and 6-10-175B.

10.5.2.2 If the results of the next calibration test are acceptable, the test would be numbered 6-10- 175C, and would permanently identify the test and appear on future correspondence.

10.5.2.3 Add no letter suffix to the number of tests other than calibration tests.

10.5.3 The completion of any amount of operational time on tests, other than calibration tests, requires the test number to be increased by one for each infraction.

11. Engine Operating Procedure

11.1 *Engine Start-up Procedure:*

11.1.1 Charge the engine with 5.92 L of test oil using a calibrated beaker P/N OHT3H-075-1.[13,10]

11.1.2 Prior to starting the engine, prime the oil pump by turning the starter for 20 s with the ignition off.

11.1.2.1 Optionally, carry out additional priming by drawing oil into the pump by applying low pressure to the oil sample valve, ensuring that test oil is not removed from the engine in the process.

11.1.3 Supply direct current (dc) power of 13 V to 15 V to the power control module and fuel pump. Start the coolant pump and allow flow rate of the coolant to reach 170 L/min.

11.1.4 Start the engine and set the speed to 1000 r/min and the torque to 25 N·m.

11.2 *Initial Run-in:*

TABLE 6 U and L Constants and Over and Under-Range Values

Quantity	U	L	Over-Range	Under-Range
Coolant flow rate, L/min	171.43	168.57	244.3	91.7
Coolant out temperature, °C	115.46	114.54	138.9	91.1
Exhaust backpressure, kPa(gauge)	4.58	4.42	8.7	0.3
Dew point, °C	18.1	14.1	120.0	0
Intake air pressure kPa(gauge)	0.07	0.03	1.1	–1.0
Intake air temperature, °C	35.37	34.63	54.2	15.8
Oil block temperature, °C	151.42	150.58	172.8	129.2
Speed, r/min	3905	3895	4160	3640
Torque, N•m	250.98	249.02	300.9	199.1
Fuel temperature, °C	31	29	82	0

11.2.1 Ramp the engine speed and torque linearly to 1500 r/min and 100 N·m over 45 s maintaining this speed and torque for 8 min. See Table 7 for the control states for each ramp and step.

11.2.2 Check all stand operating conditions.

11.2.3 After the 8 min initial run-in, ramp the engine down to 1000 r/min and 25 N·m in 45 s and take the initial oil sample of 236 mL (see 11.3 for oil sampling procedure).

11.3 *Oil Sampling:*

11.3.1 Ramp speed and torque linearly to 1000 r/min and 25 N·m (see Table 7 for ramp times) and hold for 2 min to allow the operator to obtain the initial oil sample.

11.3.2 Before taking the sample, first remove a purge sample of 472 mL.

11.3.3 Remove the oil sample of the specified volume.

11.3.4 Add the 472 mL purge sample back to the engine. Also add 177 mL new oil at 20 h, 40 h, 60 h, and 80 h. Note that no new oil is added when the initial or EOT oil samples are taken.

11.4 *Oil Leveling:*

11.4.1 Determine the oil level in the crankcase as follows:

11.4.2 Stop the engine after the 2 min oil-sample step and allow the oil to drain to the oil pan for 20 min. During the drain-down period, maintain a flow rate of 170 L/min for the engine-oil coolant.

11.4.3 Determine the oil level using the calibrated dipstick provided with the oil pan (see 12.7.1).

11.5 Record the dipstick level on Form 6,[31] the Sequence IIIH Oil Consumption Data Plot (see Annex A9).

NOTE 2—All subsequent references to Forms and Form numbers refer to footnote 30 and Annex A9.

11.6 *Engine Oil Quality Test:*

11.6.1 *General*—After completion of the initial run-in in 11.2 and determination of the initial oil level, the engine is ramped to 3900 r/min and 250 N·m for four 20 h segments followed by a shorter 10 h segment.

11.6.1.1 Start the engine as in 11.1.4 and verify there are no oil or coolant leaks and the engine is running properly.

11.6.1.2 Ramp the engine linearly in 5 min to 3900 r/min and 250 N·m (see Table 7 for the required control states).

11.6.1.3 Maintain a stabilization period for a minimum of an additional 5 min. The ramp and stabilization time together shall be a minimum of 10 min.

11.6.1.4 Start accumulating test time at the end of the 10 min stabilization or when the oil-gallery temperature reaches 151 °C, whichever is later.

11.6.1.5 un the engine at the test condition for 20 h, follow the oil sample procedure in 11.3 to obtain a 59 mL sample immediately followed by the oil leveling procedure in 11.4.

11.6.1.6 Repeat steps 11.6.1.1 – 11.6.1.5 for three additional 20 h segments followed by one 10 h segment.

11.7 *AFR and NOx Verification:*

11.7.1 AFR is controlled by the PCM; maintain at stoichiometric conditions.

11.7.1.1 Obtain real time AFR readings using either an ECM AFM1000/AFM1500[32,10] or an ECM NOx 5210 Single/Dual NOx Analyzer.[32,10]

11.7.1.2 Obtain real-time NOx analysis with an ECM NOx 5210 Single/Dual NOx Analyzer.[33,10] Alternatively, take exhaust samples for subsequent NOx analysis at test hours 1, 9, and every 10 h thereafter until the EOT.

11.8 *Measurement of Blowby Flow Rate:*

11.8.1 Take blowby readings every 5 test hours starting at test hour 1 with an additional reading within 15 min of the EOT.

11.8.2 Measure the blowby flow rate using a J-TEC Model VF563AA Blowby Flow Meter.[33,10] Refer to Annex A4 for setup and maintenance instructions. Alternatively, a sharp-edge orifice meter can be used.

11.8.2.1 Bypass the blowby gas around the J-TEC flow meter or sharp edge orifice when blowby flowrate is not being measured.

11.8.2.2 Seal the dipstick hole during engine operation by using the dipstick hole plug.

11.8.2.3 Direct the blowby gas into a suitable vent hood at all times, other than when the blowby flow rate is being measured. Do not allow the vent system to create a draw on the crankcase.

11.8.2.4 Install a three-way valve on the blowby hose exiting the engine to either allow switching from a position that sends blowby gas to the laboratory blowby gas evacuation system (for example, an Aercology[34] system), or to the blowby measurement meter.

11.8.2.5 When using a sharp-edge orifice meter, select an orifice size such that the observed pressure change ΔP used to calculate the blowby flow rate lies in the midrange of the calibration curve. Control the crankcase pressure to 0 Pa ± 12.4 Pa.

11.8.2.6 When permanently installed blowby meters are not used, portable cart applications are allowed. However, position the cart near the testing area for a sufficient time period to assure temperature stabilization of the system components prior to taking any blowby measurements. Prior to taking the actual readings, maintain blowby gas flow through the orifice meter for at least 2 min to ensure flow stability,

11.8.2.7 When using a J-TEC meter to conduct blowby measurements, flow the blowby gas through the meter for 2 min. Acquire data for the last 30 s of flow and average these data. Report the average of these data as the blowby flowrate for that test hour.

11.8.3 Correct the blowby flow rate to a standard pressure of 100 kPa and a temperature of 37.8 °C, using Eq 2:

[31] Standardized report form set and data dictionary available from the TMC at: ftp://ftp.astmtmc.cmu.edu/datadict/IIIH/current/dictionary/. A summary of the forms is given in Annex A9.

[32] The sole source of supply of this equipment known to the committee at this time is ECM (Engine Control and Monitoring), 586 E. Weddell Dr. #2, Sunnyvale, CA 94089, USA, www.ecm-co.com.

[33] The sole source of supply of this pump known to the committee at this time is J-Tec Associates, Inc., 5005 Blairs Forest Lane NE, Suite L, Cedar Rapids, IA 52402, USA. www.j-teccassociates.com.

[34] Aercology is the registered trademark of Donaldson Company Inc., 400 West 94th St., Bloomington, MN 55431, USA, www.donaldson.com.

TABLE 7 Sequence IIIH Control States

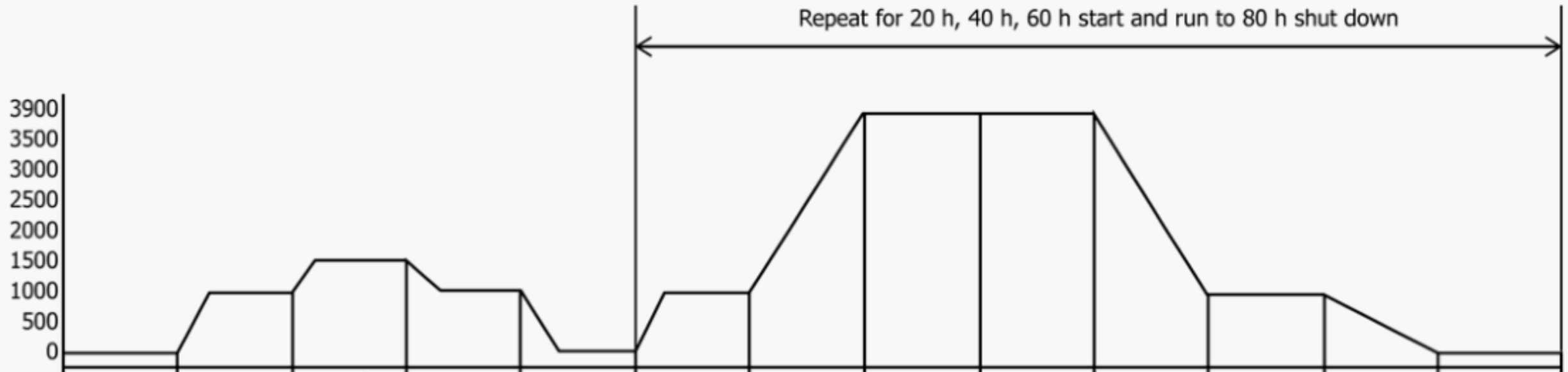

Ramp Time, s	0		45[A]	15			300			45			
Dyno Speed Setpoint	0	1000	1500	1000	0	1000	3900	3900	3900	1000	1000	0	0
Dyno Load Setpoint	0	25	100	25	0	25	250	250	250	25	25	0	0
Step Time, s		90	480	120	1200	90	300	600[B]	72000	45	120		1200
State Name	Hold	Engine Start Systems Check	Initial Run-in Includes 45 sec Ramp	Ramp Down Oil Sample	Oil Level Return Sample Purge	Engine Start Systems Check	Linear Speed Load Ramp-up	Warm-Up to Test Condition	On-Test Condition	Ramp Down	Oil Sample	Shut Down	Oil Level Return Sample Purge
Temperature, °C													
Oil Temp Setpoint	151	65	65	65	65	151	151	151	151	65	65	65	65
Engine Coolant Out	115	60	60	60	60	115	115	115	115	60	60	60	60
Pressure kPA													
Exh. Back Right/Left	Open	Open	Open	Open	Open	Open	4.5	4.5	4.5	Open	Open	Open	Open
Inlet Air	Off	0.05	0.05	0.05	Off	0.05	0.05	0.05	0.05	0.05	0.05	0.05	Off
Fuel	Off	400	400	400	Off	400	400	400	400	400	400	400	Off
Flow Rate L/min													
Engine Coolant	170	170	170	170	170	170	170	170	170	170	170	170	170

[A] 45 s ramp included in step time 480 s for initial run-in.
[B] 600 s minimum and greater than 151 °C oil temperature criterion to advance to on-test condition.
– All ramp times are linear with respect to dyno speed and load settings.
– All temp, press, and flow settings are setpoint changes between states. Control systems should allow for overshoot and stabilization.

$$F_C = F_M[3.1002\, p / (273.15 + t)]^{0.5} \quad (2)$$

where:

F_C = the corrected blowby flow rate, L/min,
F_M = the measured blowby flow rate, L/min,
p = the pressure at the exit of the blowby cannister, kPa (absolute), and
t = the Celsius temperature at the exit of the blowby canister, °C.

11.8.4 Report each corrected blowby measurement on Form 10.

12. Determination of Results

12.1 *General*—This section describes techniques used to evaluate oil performance with respect to oxidation (as measured by kinematic viscosity increase), piston deposits, ring sticking, and oil consumption. Plan the disassembly so that the parts to be rated for ring sticking, ring plugging and piston deposits are removed from the engine within 24 h of taking the EOT oil sample.

12.1.1 Remove the components from the top of the engine in order to gain access to the cylinder bores.

12.1.2 Before removing the pistons from the engine, remove the carbon deposits from the top portion of the cylinder walls, above the travel of the top compression ring.

12.1.2.1 If the piston deposits cannot be rated immediately after the pistons are removed from the engine, store the pistons in a desiccator for no longer than 72 h from EOT before rating. Do not wipe the pistons before storing them.

12.2 *Ring Sticking:*

12.2.1 Check all piston rings for freedom of movement in the grooves when removing the pistons from the engine.

12.2.2 Determine which rings are hot-stuck or cold-stuck and record the piston number and ring identification (for example, piston No. 3, top ring) for such rings on Form 8 (Summary of Ring Sticking). Record the total number of cold-stuck and hot-stuck rings on Form 4 (Test Result Summary).

12.2.3 At the time of disassembly, remove all piston rings that are free. Leave any stuck rings in place. Apply a rating of 100 % heavy carbon for any piston groove that cannot be rated due to the presence of a stuck ring.

12.2.4 *Oil Ring Plugging*—Measure the percent oil ring plugging for each piston as described in ASTM Deposit Rating Manual 20,[7] record the results on Form 8 (Summary of Ring Sticking), calculate the average per piston and record on Form 4 (Test Result Summary).

12.3 *Process for Rating Piston Parts for Deposits:*

12.3.1 Gently wipe off excess oil from the piston skirts with a soft, lint-free cloth.

12.3.2 Rate each piston pin boss for varnish and each piston top groove, second groove, oil-ring groove, second land, and undercrown area for carbon deposits using ASTM Deposit Rating Manual 20[7] rating techniques and breakdown methods. Carbon deposit ratings consist of only two values: heavy (0.00 merit value) or light (0.75 merit value).

12.3.2.1 Perform these ratings in a rating booth, using a 20-segment piston-rating cap, a piston-rating stand, and a 22 W circular rating lamp.

12.3.2.2 Report the ratings in decimal form on Form 9 (Summary of Piston Deposits).

12.3.2.3 Report any unusual deposits observed in the comments section of Form 9.

12.3.3 If multiple ratings are deemed necessary of a given part or parts, consensus rating may be used according to the following:

12.3.3.1 The raters shall be from the laboratory in question. Outside raters shall not be used unless requested and directed through the Sequence IIIH Surveillance Panel.

12.3.3.2 No averaging of ratings is permitted.

12.3.3.3 Report only one rating value, which is agreed to by the raters.

12.3.4 All raters of Sequence IIIH engine pistons shall attend an ASTM TMC Light Duty Deposit Rating Workshop every 12 months ± 30 days and produce data that meet the TMC definitions of Blue, Red, or White for piston deposits. If a rater is unable to meet this requirement, the rater can continue to rate Sequence IIIH pistons after the completion of the workshop for a grace period of 45 days and can follow the procedure described in 12.3.4.1 to generate data that meet the TMC definitions of Blue, Red, or White.

12.3.4.1 A rater who is unable to meet the requirement in 12.3.4 can schedule a visit to the TMC to generate data on ASTM Light Duty Deposit Rating Workshop pistons and receive an assessment of rating performance compared to data collected at recent workshops. Visits to the TMC will be scheduled based on availability of parts.

12.3.4.2 The TMC selects a minimum of six pistons from a collection of workshop parts for the rater to rate piston deposits. The TMC provides rating booths and lights, but the rater is responsible for providing any necessary rating aids. The TMC analyzes the data and determines if the requirement in 12.3.4 has been met. If the requirement in 12.3.4 has not been met, any time remaining in the 45 day grace period is forfeited.

12.3.5 *Weighted Piston Deposit (WPD) Rating:*

12.3.5.1 The WPD rating comprises ratings for deposits for piston undercrown, 2nd land, oil ring land (3rd land), top groove, 2nd groove, oil-ring groove, and pin-boss varnish. Record results on Form 9 (Summary of Piston Deposits) and Form 4 (Test Results Summary).

12.3.5.2 The undercrown area to be rated is where the horizontal and vertical planes meet and is defined as the flat area on the undercrown of the piston between the pin bosses and piston skirts. Do not rate any parts on the inside surface of the piston skirts as part of the undercrown rating.

12.3.5.3 For each groove and ring land multiply each rating value by the percentage of surface area covered by that rating. The sum of these values constitutes the unweighted merit rating for each part.

12.3.5.4 Rate the piston-boss varnish on the pin boss area of each piston. Use an average of the front and rear of each piston as the unweighted rating for piston boss varnish.

12.3.5.5 Use the unweighted ratings, as described in ASTM Deposit Rating Manual 20, to calculate the weighted rating for

each piston part by multiplying the average result for that part by the following weighting factors:

piston undercrown	10 %
2nd land	15 %
3rd land (ORLD)	30 %
pin-boss varnish	10 %
top groove	5 %
2nd groove	10 %
oil ring groove	20 %

12.3.5.6 Rate groves with stuck rings as described in 12.2.3.

12.3.5.7 Calculate the weighted rating for each piston as the sum of the weighted ratings of the individual piston parts.

12.3.5.8 Calculate the WPD result for the test as the average of the weighted ratings for the six pistons and record on Forms 9 and 4.

12.4 *Kinematic Viscosity Measurements*—Using Test Method D445, determine the kinematic viscosity at 40 °C of the fresh (new) test oil, the initial oil sample taken, each of the 20 h analysis samples and the EOT sample.

12.4.1 Do not filter the samples.

12.4.2 Use either the Cannon-Fenske Routine Viscometer of the Ostwald Type for Transparent Liquids or the Cannon-Fenske Opaque Viscometer of the Reverse-Flow Type for Transparent and Opaque Liquids.

12.4.3 The viscosity of the initial sample can be as much as 10 mm^2/s less than that of the new oil due to permanent shearing effects. If the difference is greater than 10 mm^2/s, explore possible causes such as failure to take the 472 mL purge sample prior to withdrawing the 236 mL analysis sample, or an excessive amount of build-up oil in the system.

12.4.4 Calculate the change in viscosity relative to that of the initial sample, for the 20 h, 40 h, 60 h, 80 h, and EOT samples. Record the changes on Form 7 (Used Oil Analysis Results) and the EOT (final) percent viscosity increase on Form 4 (Test Result Summary).

12.4.5 *The Special Case of the Viscosity Increase Being Zero or Negative*—In this case, record 0.1 % as the percent change on Form 7 and for the EOT result on Form 4.

NOTE 3—The minimum viscosity increase that will be considered for this method is 0.1 % so this value replaces any value that is ≤0 %.

12.4.5.1 Comment on Form 14 (Test Comments) that the original result has been replaced by 0.1 % because the viscosity change was zero or negative.

12.4.6 *The Special Case of the Viscosity being Too Viscous to Measure (TVTM)*—If the viscosity is >8000 mm^2/s, record 8000 mm^2/s on Form 7 and use this value to calculate the change in viscosity.

NOTE 4—The maximum viscosity that will be considered by this method is 8000 mm^2/s so this value replaces any value >8000 mm^2/s.

12.4.6.1 Complete the calculations on Form 4 for percent viscosity increase using the percent value for the final drain from Form 7 and using a severity adjustment (SA) of zero.

12.4.6.2 Comment on Form 14 (Test Comments) that a severity adjustment of zero was used for the viscosity increase because the measured viscosity was > 8000 mm^2/s.

12.4.7 *Kinematic Viscosity Increase Plot*—Plot the percent viscosity increase for the initial, each of the 20 h samples and EOT sample and report the results on Form 11.

12.5 *Testing Oil Samples for Element Concentration*—Use Inductively Coupled Plasma Atomic Emission Spectrometry (ICP-AES) Analysis, Test Method D5185, to determine the mass fraction of the following 15 elements: aluminum, boron, calcium, copper, iron, potassium, magnesium, manganese, molybdenum, sodium, phosphorus, lead, silicon, tin and zinc for the fresh oil, the initial oil sample, each of the 20 h analysis samples and the EOT sample:

12.5.1 Report the results in mg/kg on Form7a.

12.6 *Blowby Flow-Rate Measurements*—Measure the blowby flow rate in L/min, as described in 11.8, for the initial oil sample, each of the 20 h analysis samples and the EOT sample. Plot the results on Form 10 (Blowby Values and Plot).

12.7 *Oil Consumption Computation*—Compute the oil consumption for the test as follows:

12.7.1 *Oil Level*—Determine oil level, in mL, at 20 h, 40 h, 60 h, 80 h, and EOT using Table A10.2 Determination of Volume of Engine Oil in Pan. Each mm on the dipstick corresponds to an oil volume in mL. Record the value in the Oil Level (mL) line of the oil level worksheet (see Table A10.1).

12.7.2 *Oil Consumption at 20 h Intervals*—Calculate the oil consumption at each 20 h interval by adding 118 mL to the difference between the current oil level and the previous oil level. EOT oil consumption is calculated by subtracting 236 mL from the difference between the 80h oil level and the EOT oil level.

12.7.3 Determine the total oil consumed for the test as the sum of the oil consumption for each 20 h segment and the final 10 h segment. Enter the total in the EOT column of Table A10.1. Report the oil consumption results on Form 4.

12.7.4 *Oil Consumption Plot*—Plot the cumulative oil consumption results on Form 6.

12.8 *Oxidation and Nitration*—Use Fourier Transform Infrared (FTIR) to measure oxidation using both integrated IR[35] and peak height IR techniques[36] based on Practice E168. Carry out quantitative infrared analysis on each of the 20 h analysis samples and the EOT sample using Practice E168. Report the results on Form 7.

12.9 *Total Acid Number (TAN) and Total Base Number (TBN)*—Determine TAN, Test Method D664, and TBN, Test Method D4739, for each of the 20 h samples and the EOT sample and report the results on Form 7a.

12.10 *Photographs of Test Parts*—Take color photographs of the test parts for inclusion in the test report as follows:

12.10.1 Photograph pistons after completing all ratings.

12.10.2 Do not coat the pistons with build-up oil (for preservation) before the photographs are taken. Do not re-install piston rings.

12.10.3 Photograph all six piston front sides in one shot. Piston labels are not required (see 12.10.7).

[35] Mack T10 Integrated Infrared Oxidation Measurement Procedure available from TMC.

[36] Mack T12 Infrared Oxidation Peak Height Measurement Procedure available from TMC.

12.10.4 Photograph all six piston rear sides in one shot. Piston labels are not required (see 12.10.7).

12.10.5 Size the final piston photographs for inclusion in the test report so that the overall piston height is not less than 5 cm, but small enough that three photographs can be mounted in a column on the 28 cm dimension of a 22 cm by 28 cm sheet of paper.

12.10.6 Assemble the photographs on two pages, with the front side photographs on one page, and the rear photographs on the other page.

12.10.7 Mount the photographs on each of the two pages with the reciprocating axes of the pistons parallel to the 28 cm dimension of the page. Arrange the photographs in two vertical columns of three each, with the No. 1 piston in the upper left corner of the page, No. 2 piston in the upper right corner, No. 3 piston in the center of the left column, etc.

12.11 *Determination of Operational Validity*—Determine and document the operational validity of every Sequence IIIH test conducted, as follows:

12.11.1 Complete the report forms to substantiate that the test stand, engine build-up, installation of the engine on the test stand, and the test operation conformed to the procedures specified in this test method.

12.11.2 Inspect the test records for instances of downtime (excluding the initial oil level run of the test), and record any such instances on Form 14, Downtime and Outlier Report Form, in standardized report form set. When performing the oil level adjustment at each 20 h interval, identify as downtime any time in excess of 60 min from the time when the engine ramps down until the test is back on test operating conditions. Enter the total downtime on Form 13, Downtime Summary, in standardized report form set. If the downtime exceeds either a total of 36 h, or exceeds 24 h in the last 45 h of the test time, note on Form 1 that the test is invalid.

12.11.3 If the EOT QI value is below 0.000, the test laboratory shall conduct an engineering review of the test operations and document the results. Report any findings of such an engineering review of reference oil tests to the TMC. If needed, additional industry experts may be consulted.

13. Report

13.1 For reference-oil results, use the standardized report form set available from the ASTM TMC and data dictionary[31] for reporting test results and for summarizing operational data.

NOTE 5—Report the non-reference-oil test results on these same forms if the results are intended to be submitted as candidate oil results against a specification.

13.1.1 Fill out the report forms according to the formats shown in the data dictionary.

13.1.2 Transmit results to the TMC within 5 working days of test completion.

13.1.3 Transmit the results electronically as described in the ASTM Data Communications Committee Test Report Transmission Model (Section 2—Flat File Transmission Format) available from the ASTM TMC. Upload files via the TMC's website.

13.2 Report all reference-oil test results, whether aborted, invalidated, or successfully completed, to the TMC.

13.3 *Deviations from Test Operational Limits*—Report all deviations from specified test operational limits.

13.4 *Precision of Reported Units*—Use the Practice E29 rounding-off method for critical pass/fail test result data. Report the data to the same precision as indicated in the data dictionary.

13.5 In the space provided, note the time, date, test hour, and duration of any shutdown or off-test condition. Document the outcome of all prior reference-oil tests from the current calibration sequence that were operationally or statistically invalid.

13.6 If a calibration period is extended beyond the normal calibration period length, make a note in the comment section and attach a written confirmation of the granted extension from the TMC to the test report. List the outcomes of previous runs that may need to be considered as part of the extension in the comment section.

14. Precision and Bias

14.1 *Precision:*

14.1.1 Test precision is established on the basis of operationally valid reference-oil test results monitored by the TMC.

14.1.2 *Intermediate Precision Conditions*—Conditions where test results are obtained with the same test method using the same test oil, with changing conditions such as operators, measuring equipment, test stands, test engines, and time.

NOTE 6—Intermediate precision is the appropriate term for this test method, rather than repeatability, which defines more rigorous within-laboratory conditions.

14.1.2.1 *Intermediate Precision Limit (ip)*—The difference between two results obtained under intermediate precision conditions that in the long run, in the normal and correct conduct of the test method, exceed the value shown in Table 8 in only one case in twenty. When only a single test result is available, the intermediate precision limit can be used to calculate a range (test result ± intermediate precision limit) outside of which a second test result would be expected to fall about one time in twenty.

14.1.3 *Reproducibility Conditions*—Conditions where test results are obtained with the same test method using the same test oil in different laboratories with different operators using different equipment.

TABLE 8 Test Precision for Sequence IIIH[A]

Quantity, units	Intermediate Precision[B]		Reproducibility[C]	
	S_{ip}[D]	*ip*	S_R[D]	*R*
Kinematic viscosity increase at EOT, %	0.706	1.977	0.710	1.988
Average WPD[E], merit	0.475	1.330	0.497	1.392

[A] These statistics are based on 40 tests conducted on 8 stands at 5 laboratories on ASTM TMC Reference Oils 434-2, 436, and 438-1, and were calculated on June 6, 2016.
[B] See 14.1.2.
[C] See 14.1.3.
[D] *S* is the estimated standard deviation.
[E] Weighted piston deposits (see 12.3.5.8).

14.1.3.1 *Reproducibility Limit (R)*—The difference between two results obtained under reproducibility conditions that would, in the long run, in the normal and correct conduct of the test method, exceed the values in Table 8 in only one case in twenty. When only a single test result is available, the reproducibility limit can be used to calculate a range (test result ± reproducibility limit) outside of which a second test result would be expected to fall about one time in twenty.

14.1.4 The test precision for the Sequence IIIH is shown in Table 8. The TMC updates precision data frequently; contact the TMC for this information.

14.2 *Bias*—Bias is determined by applying an accepted statistical technique to reference-oil test results and, when a significant bias is determined, a severity adjustment is permitted for non-reference-oil test results (refer to the TMC for details).

ANNEXES

(Mandatory Information)

A1. ASTM TEST MONITORING CENTER ORGANIZATION

A1.1 *Nature and Functions of the ASTM Test Monitoring Center (TMC)*—The TMC is a non-profit organization located in Pittsburgh, Pennsylvania and is staffed to: administer engineering studies; conduct laboratory inspections; perform statistical analyses of reference oil test data; blend, store, and ship reference oils; and provide the associated administrative functions to maintain the referencing calibration program for various lubricant tests as directed by ASTM Subcommittee D02.B0 and the TMC Executive Committee. The TMC coordinates its activities with the test sponsors, the test developers, the surveillance panels, and the testing laboratories. Contact TMC through the TMC Director at:

ASTM Test Monitoring Center
6555 Penn Avenue
Pittsburgh, PA 15206-4489
www.astmtmc.cmu.edu

A1.2 *Rules of Operation of the ASTM TMC*—The TMC operates in accordance with the ASTM Charter, the ASTM Bylaws, the Regulations Governing ASTM Technical Committees, the Bylaws Governing ASTM Committee D02, and the Rules and Regulations Governing the ASTM Test Monitoring System.

A1.3 *Management of the ASTM TMC*—The management of the Test Monitoring System is vested in the Executive Committee elected by Subcommittee D02.B0. The Executive Committee selects the TMC Director who is responsible for directing the activities of the TMC.

A1.4 *Operating Income of the ASTM TMC*—The TMC operating income is obtained from fees levied on the reference oils supplied and on the calibration tests conducted. Fee schedules are established by the Executive Committee and reviewed by Subcommittee D02.B0.

A2. PRESSURE AND TEMPERATURE MEASUREMENT LOCATIONS

A2.1 Figs. A2.1-A2.9 show the location of the pressure and temperature transducers.

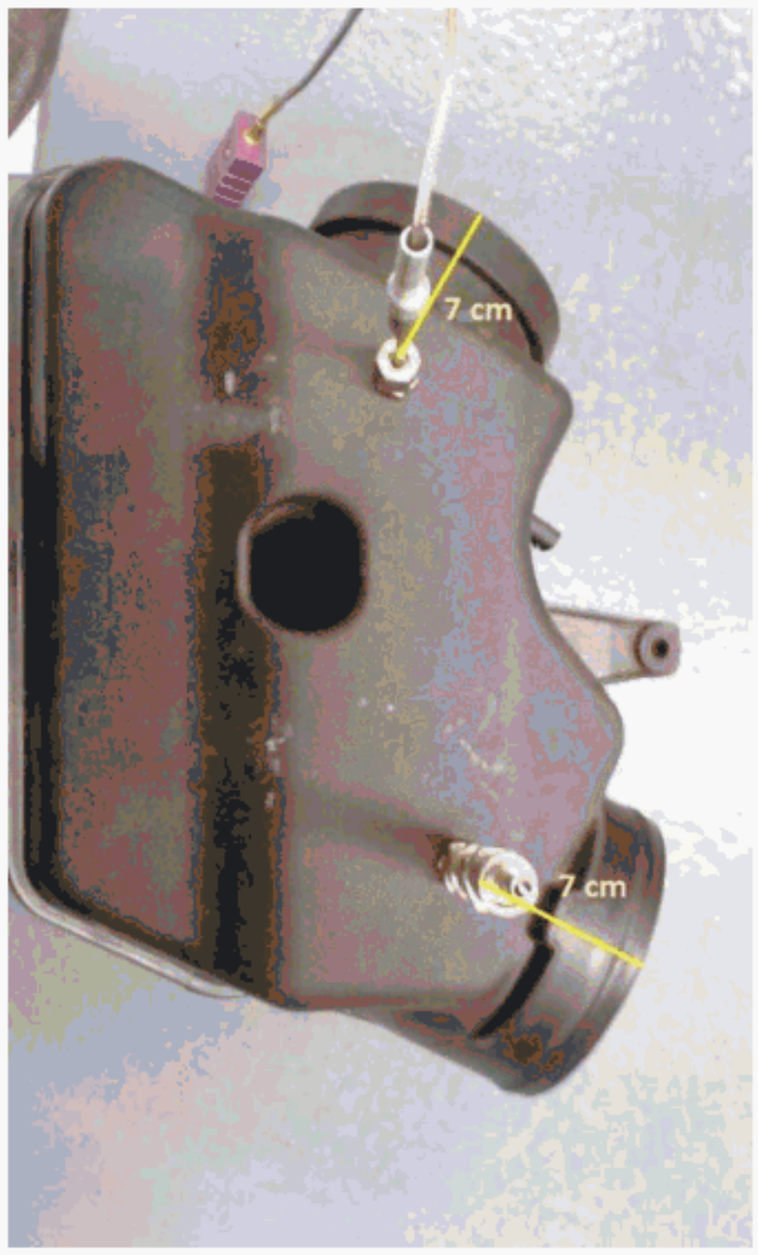

FIG. A2.1 Intake Air Temperature and Pressure—Air Resonator

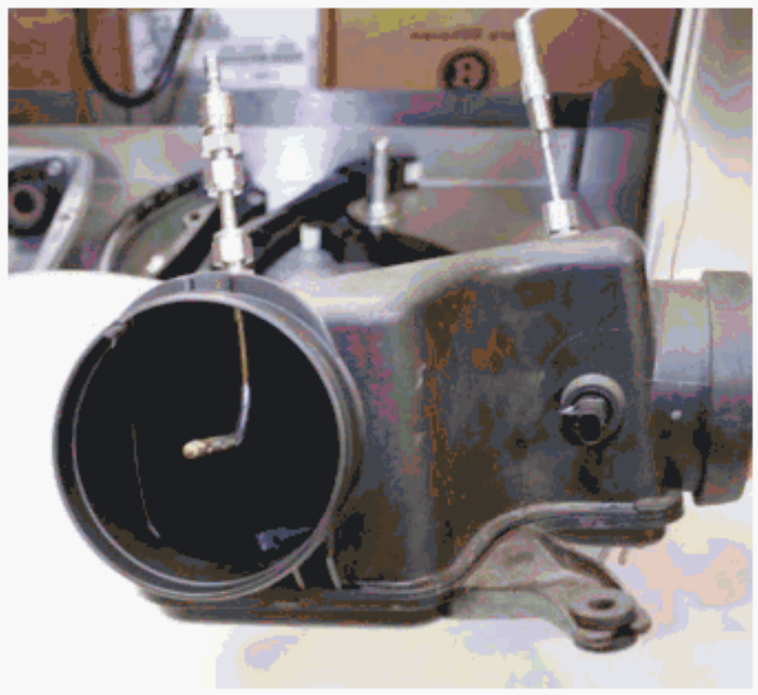

FIG. A2.2 Intake Air Temperature and Pressure—Air Resonator

FIG. A2.3 Intake Air Temperature and Pressure—Air Resonator

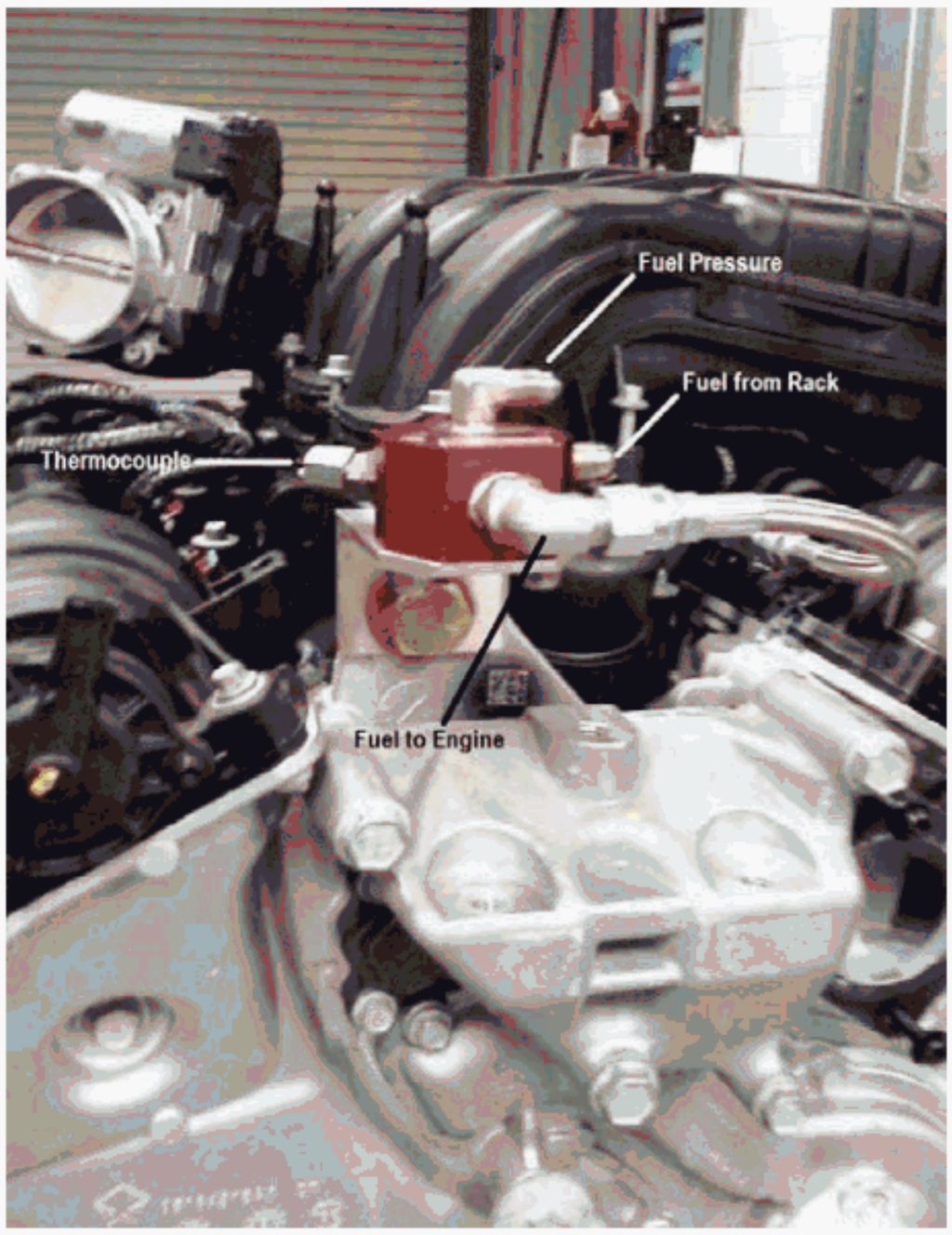

FIG. A2.4 Fuel Temperature, Pressure and Supply

FIG. A2.5 Fuel Temperature, Pressure and Supply

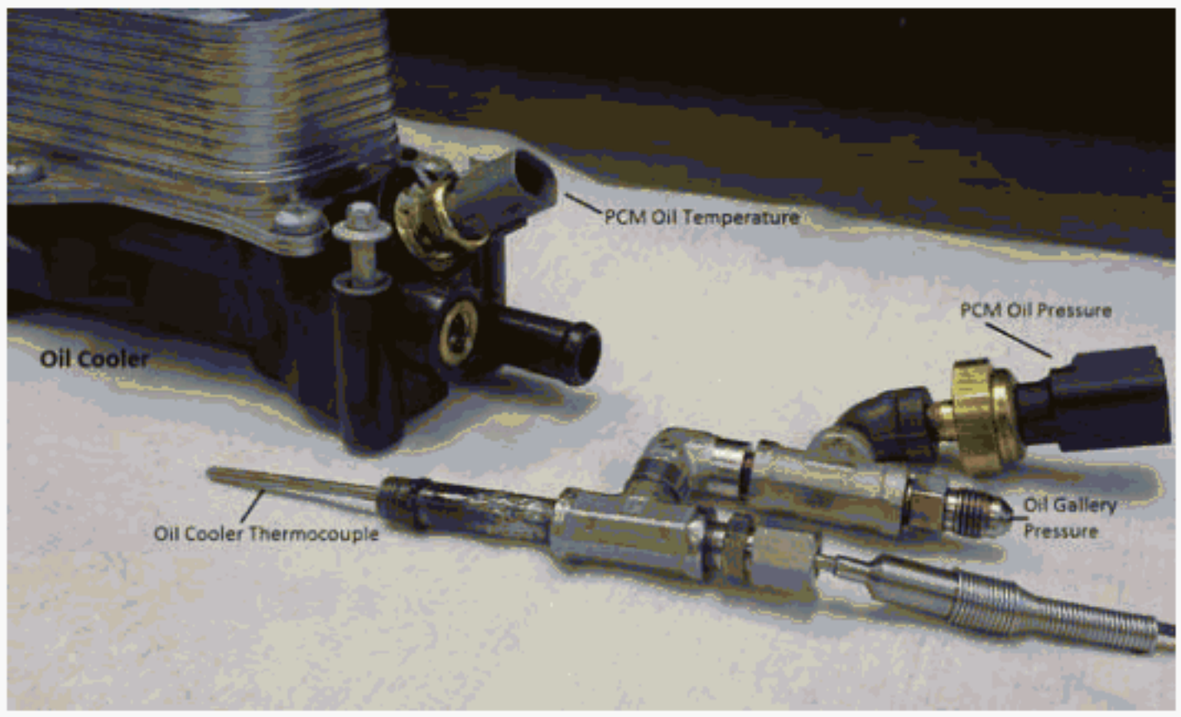

FIG. A2.6 Oil Cooler Temperature and Oil Gallery Pressure

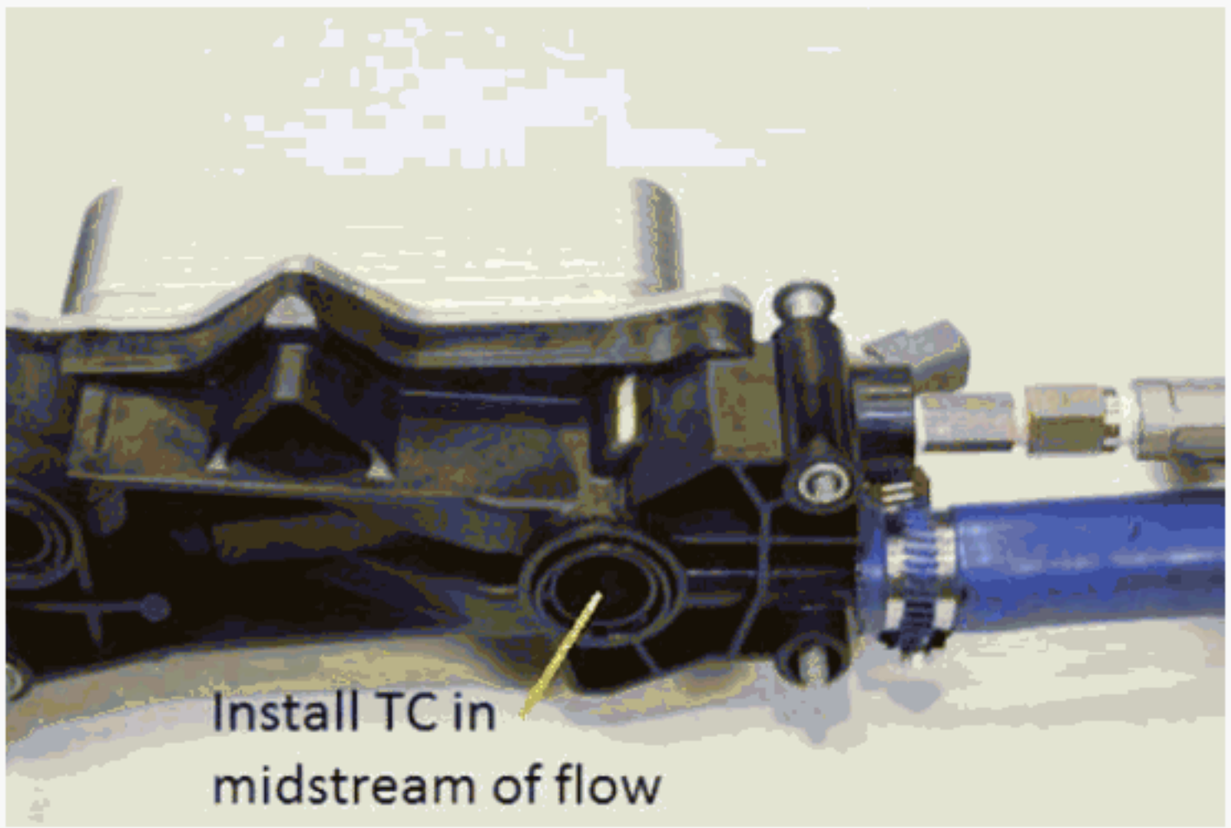

FIG. A2.7 Oil Cooler Temperature and Oil Gallery Pressure

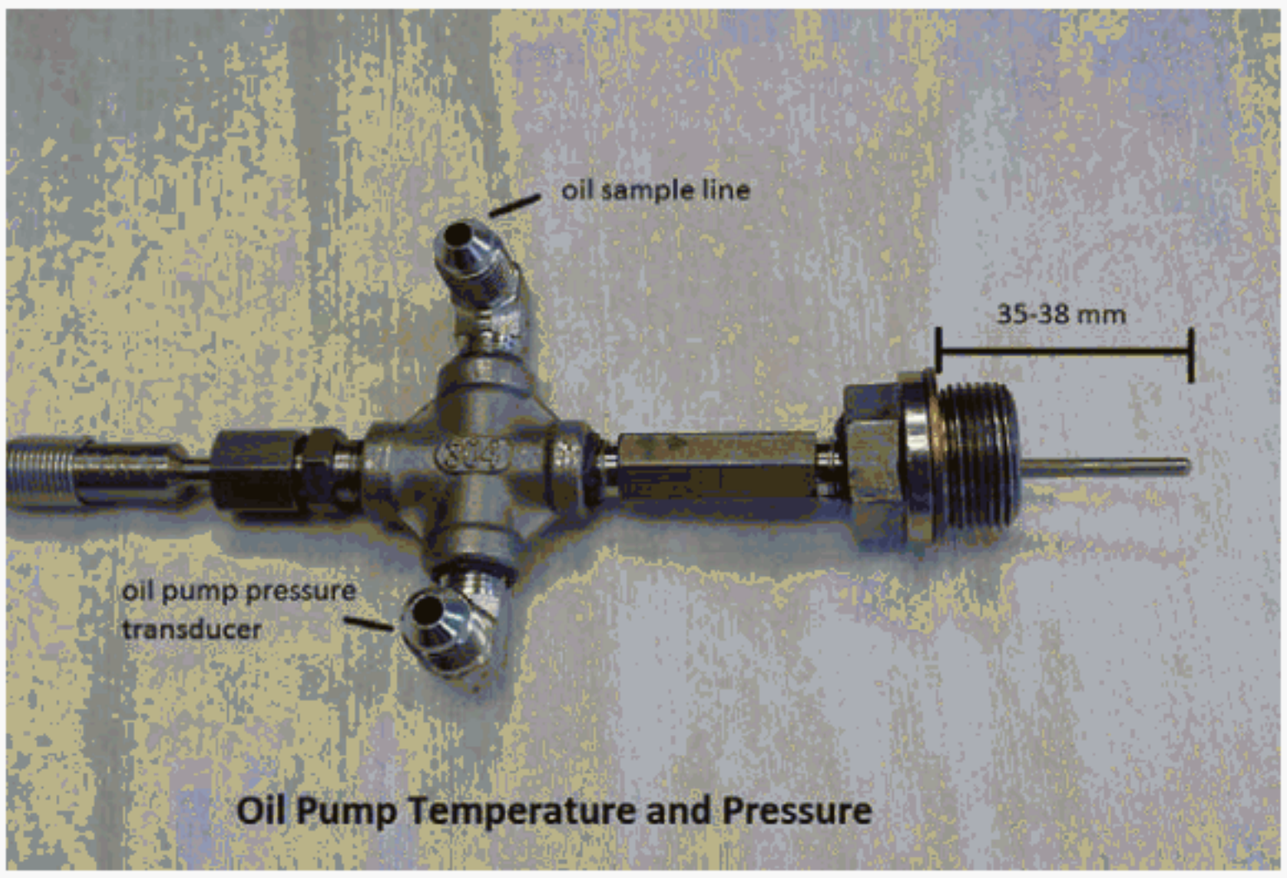

FIG. A2.8 Oil Pump Temperature and Pressure

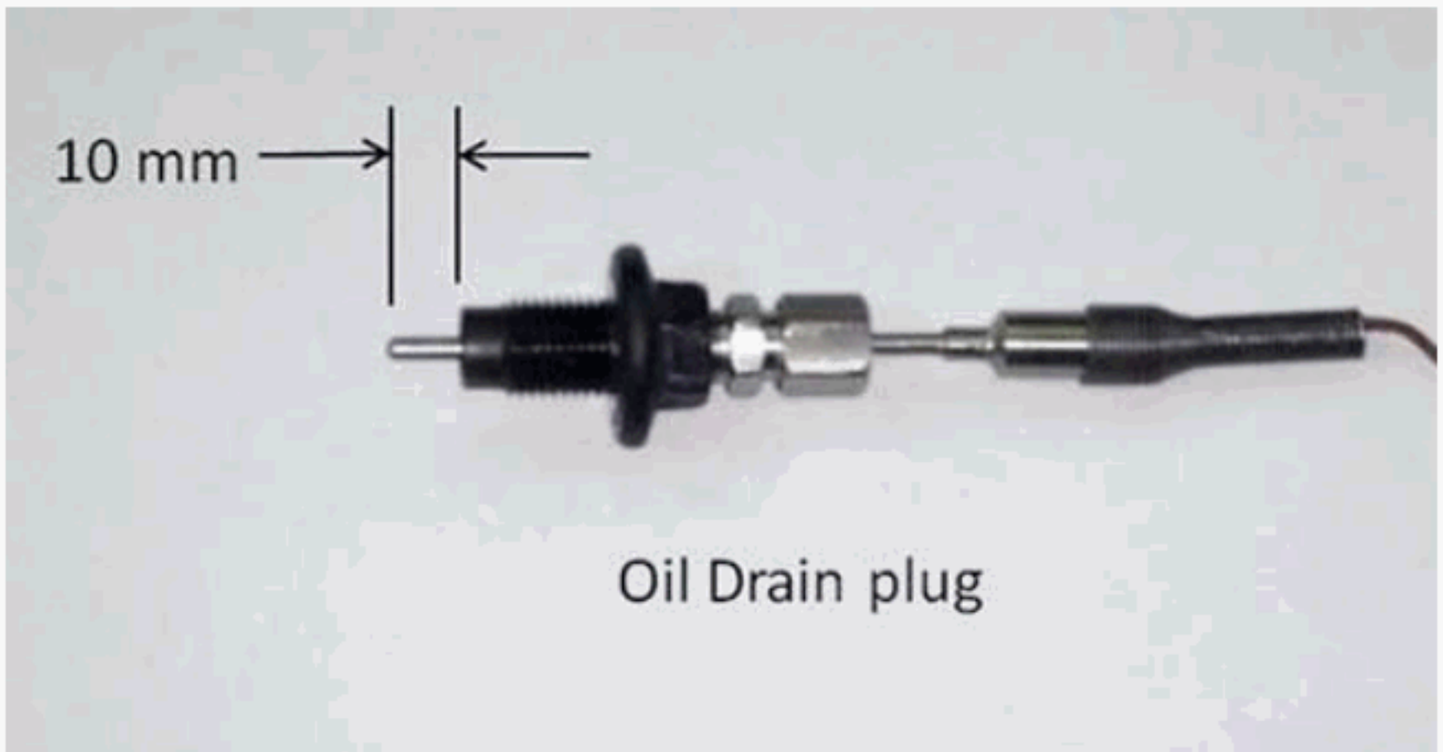

FIG. A2.9 Oil Sump Temperature

A3. BLOWBY VENTILATION SET UP

A3.1 The blowby ventilation set up is shown in Fig. A3.1.

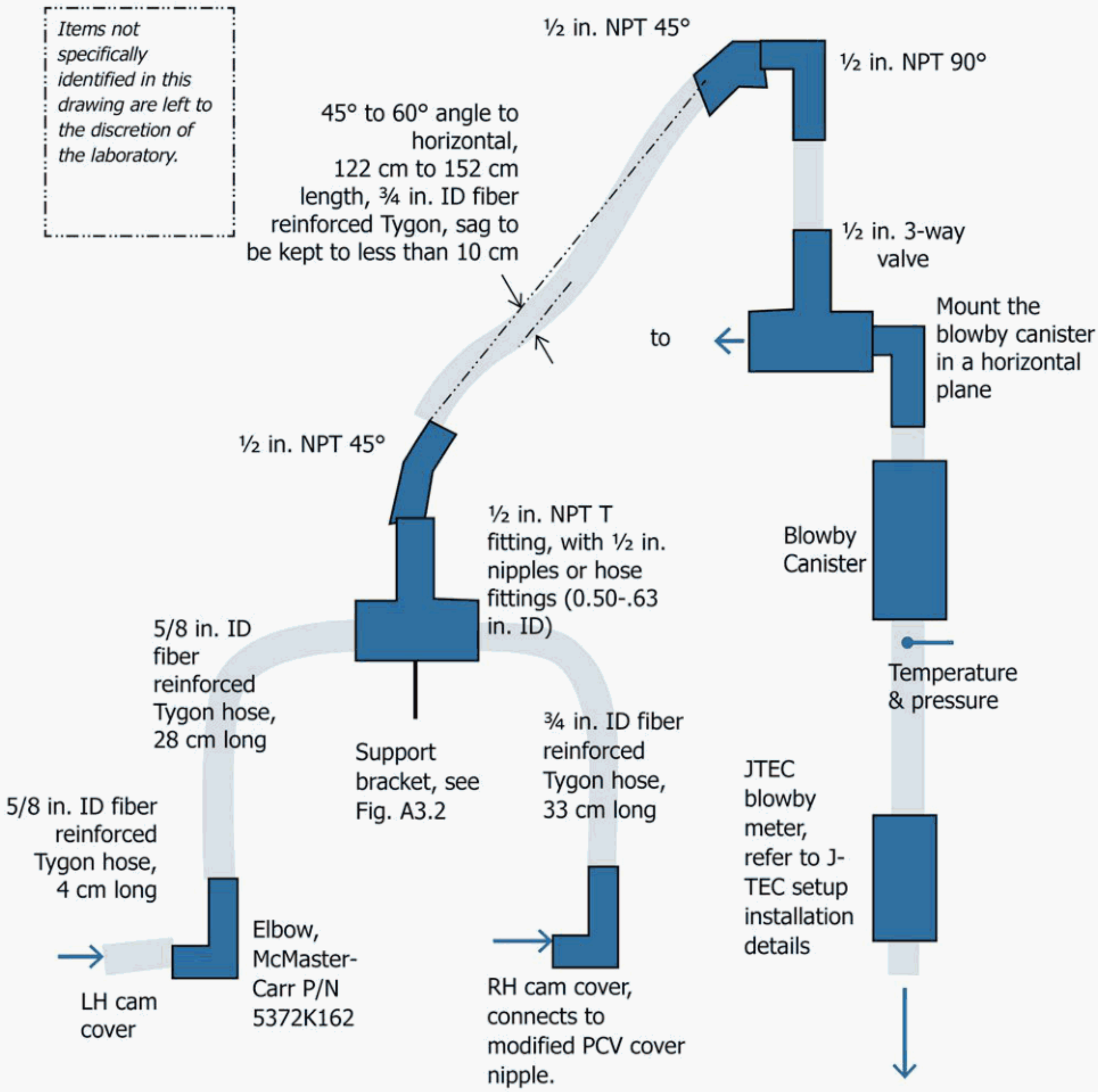

FIG. A3.1 Blowby Ventilation Setup

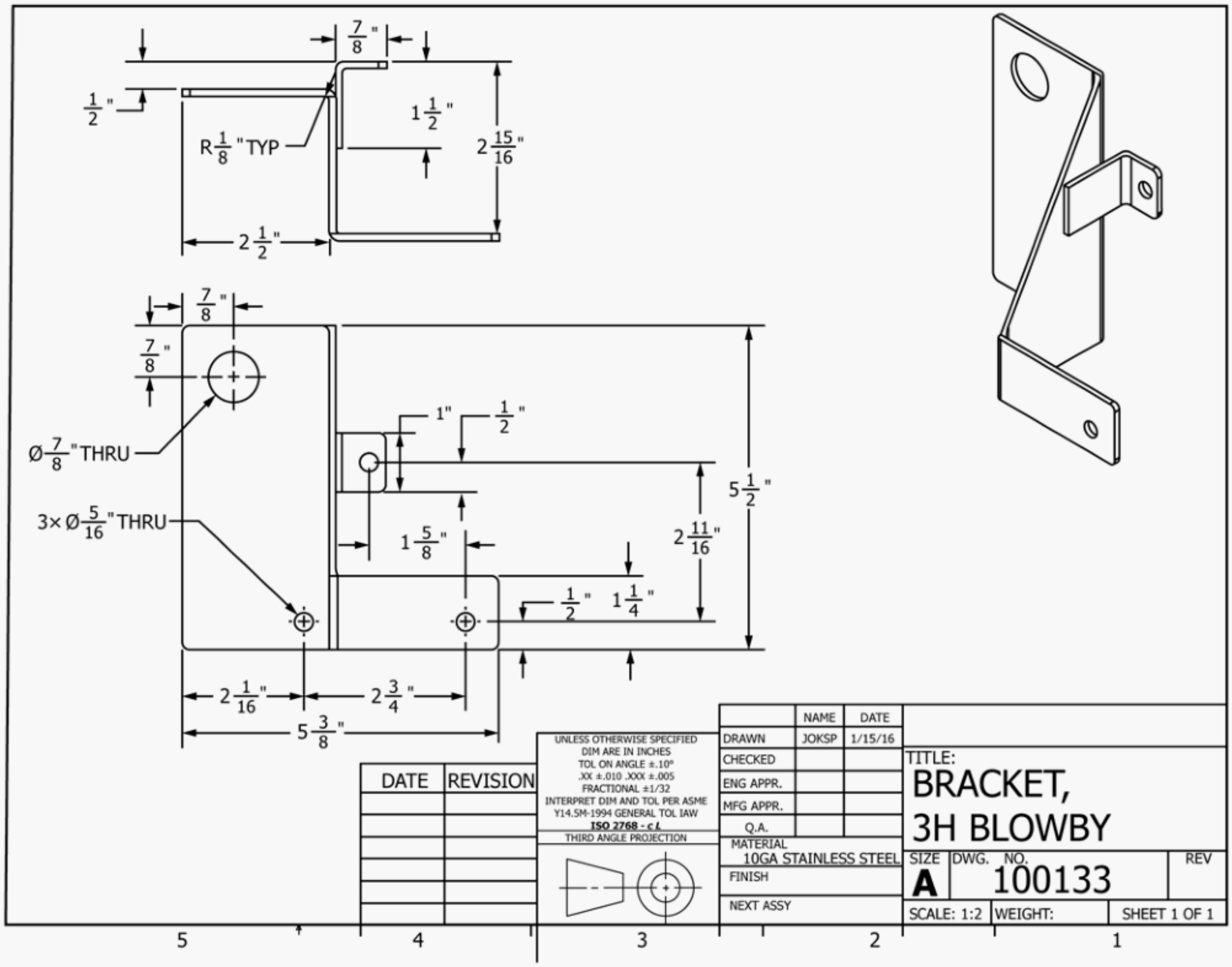

FIG. A3.2 Blowby Ventilation Support Bracket

A4. SETUP AND MAINTENANCE OF THE J-TEC MODEL VF563AA BLOWBY FLOW METER

A4.1 General Installation Instructions

A4.1.1 Install the flow meter as shown in Fig. A4.1 with a minimum straight-pipe length of 20-pipe diameters upstream and 10-pipe diameters downstream from the flow meter. For example, a 2 cm diameter tube or hose should have 40 cm of straight length immediately before the flow meter inlet tube. This condition provides a more symmetrical flow profile, which is necessary to obtain accurate and repeatable results.

A4.1.2 A typical connection to the flow meter is made by attaching flexible hose onto the outside of the inlet tube and outlet tube.

A4.1.3 Install the flow meter vertically with flow into the top and out the bottom to encourage liquids to drain out of the flow meter.

A4.1.4 As shown in Fig. A4.1, install a J-TEC VF563AA P/N CCV6000[33,10] filter canister in the pipe between the crankcase and the flow meter. This canister minimizes the effect of pulsating flows, and collects oil and water droplets to keep the flow meter cleaner.

A4.2 Electrical Installation

A4.2.1 Fig. A4.2 shows the recommended electrical connections for the flow meter.

A4.2.1.1 Provide a filtered dc power supply to the blowby flow meter of at least 35 mA at +12 V to +24 V.

A4.2.1.2 Provide a dc analog output signal of 0 V to 5 V, proportional to the flow range. (Output impedance is 100 Ω.)

A4.2.1.3 Make electrical connections to the flow meter with a four-conductor cable with each cable made of 26 to 22 AWG.

A4.2.1.4 Connect to the flow meter head using a Conxall cable connector P/N 6282-5SG-3XX[37,10] (available as P/N DRJ0720 from J-TEC.[33,10] The contact pins of the connector are identified in Fig. A4.2.

A4.3 Cleaning and Maintenance

A4.3.1 To ensure the inside of the flow tube and strut remain in a clean condition, carry out the following cleaning procedure prior to every test start.

A4.3.1.1 Gently brush the strut and the inside of the tube with a soft brush or cotton swab. A solvent cleaner, such as a brake parts cleaner that degreases and leaves no residue, may be used to loosen deposits. Ensure the solvent is compatible with aluminum, fluorelastomers, and PTFE.

A4.3.1.2 DO NOT use wire brushes or use high-pressure liquids which may damage to the transducers.

[37] The sole source of supply of this connector known to the committee at this time is Conxall, 601 E. Wildwood, Villa Park, IL 60181, Tel: 630-834-7504, www.conxall.com.

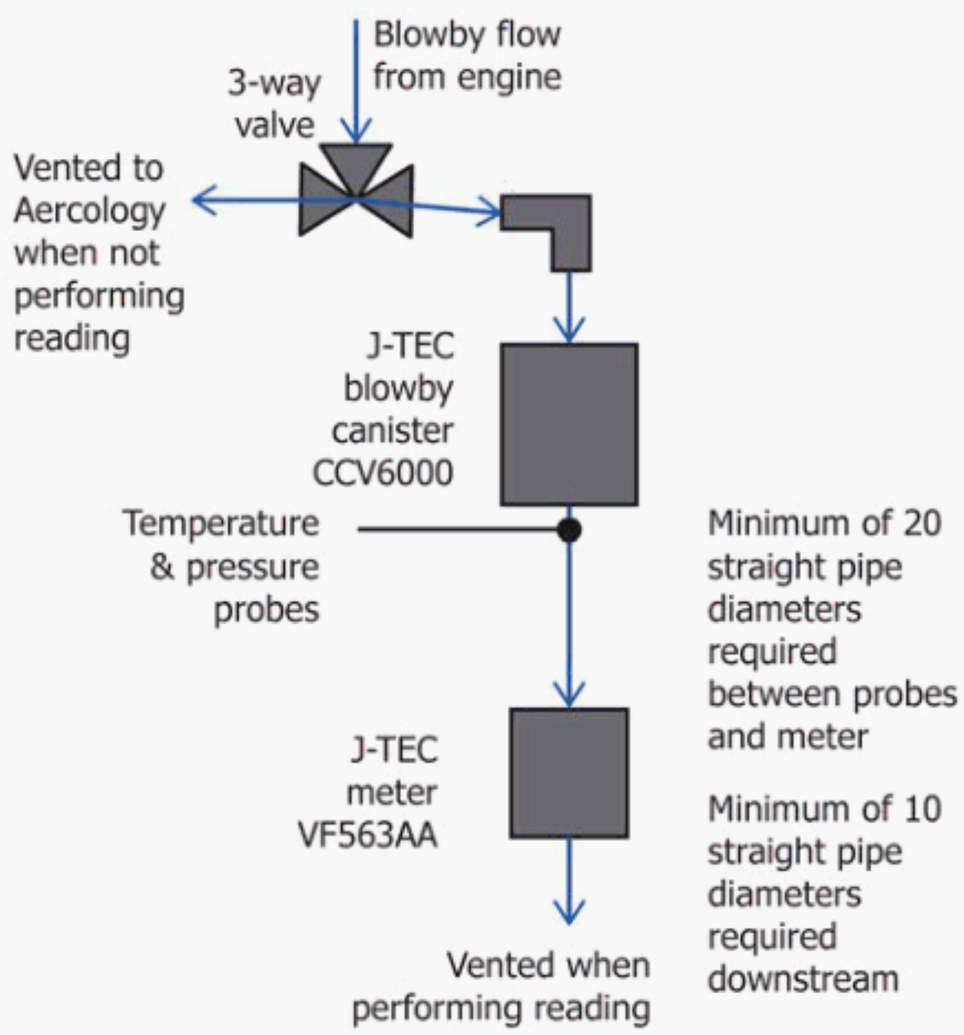

FIG. A4.1 Engine Blowby Measurement System

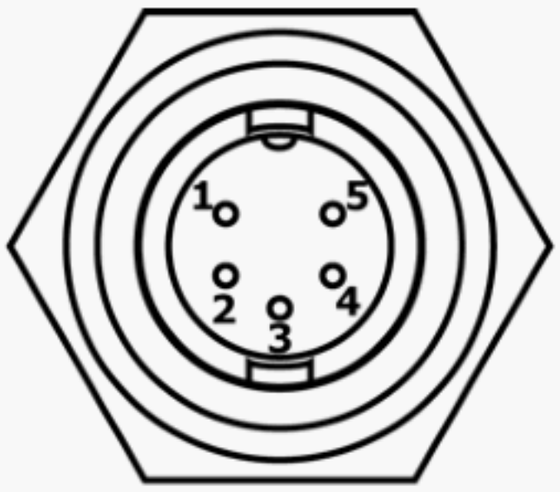

NOTE: Connector viewed from outside of flowmeter

Pin	Color	Description
5		Not Used
4	RED	DC Power Input (+12 V to +24 V)
3	WHT	DC Output (0 V to 5 V or Frequency)
2	BLK	Signal Ground
1	BLK	Power Ground

Flowmeter Connector Pin-Outs

Recommended Electrical Connections
(separate grounds for lowest measurement error)

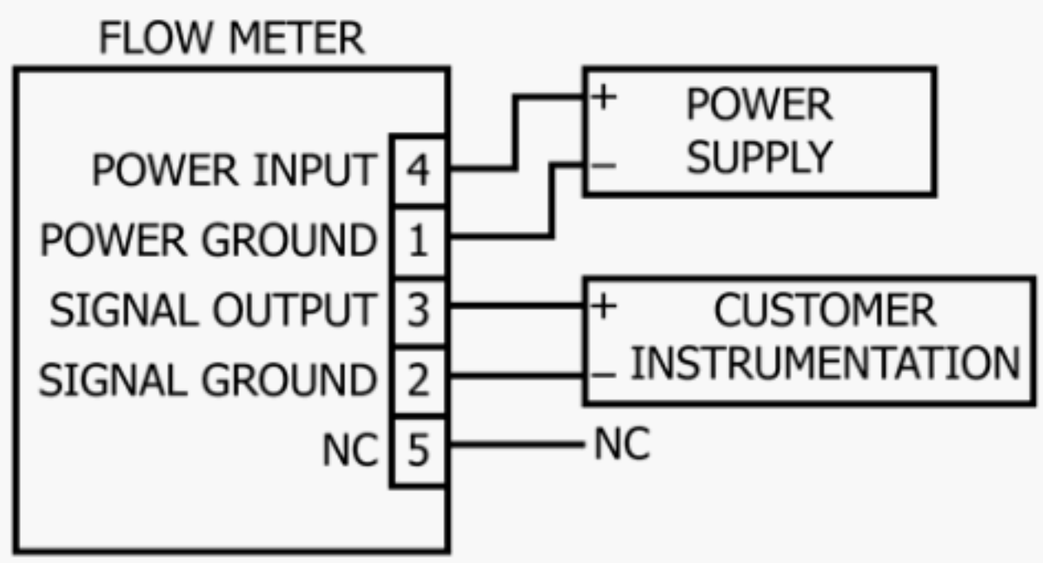

CIRCUIT BOARD OUTPUT JUMPERS

DAA0XXX-0003	ANALOG (0 V to 5 V)	P3-2 to P3-3
DAA0XXX-0002	FREQUENCY	P3-2 to P3-1

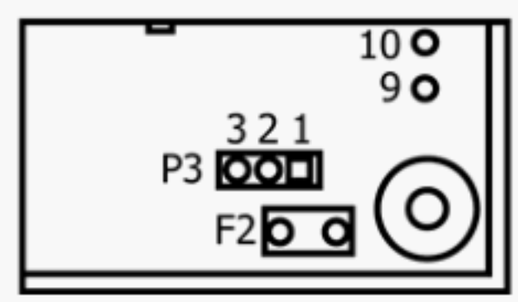

FIG. A4.2 Recommended Electrical Connections for Flow Meter

A5. ASTM TMC: CALIBRATION PROCEDURES

A5.1 *Reference Oils*—These oils are formulated or selected to represent specific chemical, or performance levels, or both. They are usually supplied directly to a testing laboratory under code numbers to ensure that the laboratory is not influenced by prior knowledge of acceptable results in assessing test results. The TMC determines the specific reference oil the laboratory shall test.

A5.1.1 *Reporting Reference-Oil Data*—Test laboratories that receive reference oils for stand calibration shall submit data to the TMC on every sample of reference oil they receive. If a shipment contains any missing or damaged samples, the laboratory shall notify the TMC immediately.

A5.2 *Calibration Testing:*

A5.2.1 Full-scale calibration testing shall be conducted at 6-monthly intervals or after 15 tests, whichever comes first.

A5.2.1.1 These full-scale tests are conducted using coded reference oils supplied by the TMC. It is a laboratory's responsibility to keep the on-site reference-oil inventory at or above the minimum level specified by the TMC test engineers.

A5.2.2 *Test Stands Used for Non-Standard Tests*—If a non-standard test is conducted on a previously calibrated test stand, the laboratory shall conduct a reference-oil test on that stand to demonstrate that it continues to be calibrated, prior to running standard tests.

A5.3 *Reference-Oil Storage*—Store under cover in locations where the ambient temperature is between –10 °C and +50 °C.

A5.4 *Analysis of Reference Oils*—Unless specifically authorized by the TMC, do not analyze TMC reference oils, either physically or chemically. Do not resell ASTM reference oils or supply them to other laboratories without the approval of the TMC. The reference oils are supplied only for the intended purpose of obtaining calibration under the ASTM Test Monitoring System. Any unauthorized use is strictly forbidden. The testing laboratory tacitly agrees to use the TMC reference oils exclusively in accordance with the TMC's published Policies for Use and Analysis of ASTM Reference Oils, and to run and report the reference-oil test results according to TMC guidelines. Additional policies for the use and analysis of ASTM Reference oils are available from the TMC.

A5.5 *Conducting a Reference-Oil Test*—When laboratory personnel are ready to run a reference calibration test, they shall request an oil code via the TMC website.

A5.6 *Reporting Reference-Oil Test Results*—Upon completion of the reference-oil test, the test laboratory transmits the data electronically to the TMC, as described in Section 12. The TMC reviews the data and contacts the laboratory engineer to report the laboratory's calibration status. All reference-oil test results, whether aborted, invalidated, or successfully completed, shall be reported to the TMC.

A5.6.1 All deviations from the specified test method shall be reported.

A6. ASTM TEST MONITORING CENTER: MAINTENANCE ACTIVITIES

A6.1 *Special Reference-Oil Tests*—To ensure continuous severity and precision monitoring, calibration tests are conducted periodically throughout the year. Occasionally, the majority or even all of the industry's test stands will conduct calibration tests at roughly the same time. This could result in an unacceptably large time frame when very few calibration tests are conducted. The TMC can shorten or extend calibration periods as needed to provide a consistent flow of reference-oil test data. Adjustments to calibration periods are made such that laboratories incur no net loss or gain in calibration status.

A6.2 *Special Use of the Reference-Oil Calibration System*—The surveillance panel has the option to use the reference-oil system to evaluate changes that have potential impact on test severity and precision. This option is only taken when a program of donated tests is not feasible. The surveillance panel and the TMC shall develop a detailed plan for the test program. This plan requires all reference-oil tests in the program to be completed as close to the same time as possible, so that no laboratory/stand calibration status is left pending for an excessive length of time. In order to maintain the integrity of the reference-oil monitoring system, each reference-oil test is conducted so as to be interpretable for stand calibration. To facilitate the required test scheduling, the surveillance panel may direct the TMC to lengthen and shorten reference-oil calibration periods within laboratories such that the laboratories incur no net loss or gain in calibration status. To ensure accurate stand, or laboratory, or both severity assessments, conduct non-reference-oil tests the same as reference-oil tests.

A6.3 *Donated Reference-Oil Test Programs*—The surveillance panel is charged with maintaining effective reference-oil test severity and precision monitoring. During times of new parts introductions, new or re-blended reference-oil additions, and procedural revisions, it may be necessary to evaluate the possible effects on severity and precision levels. The surveillance panel may choose to conduct a program of donated reference-oil tests in those laboratories participating in the monitoring system, in order to quantify the effect of a particular change on severity and precision. Typically, the surveillance panel requests its panel members to volunteer enough reference-oil test results to create a robust data set. Broad laboratory participation is needed to provide a representative sampling of the industry. To ensure the quality of the data obtained, donated tests are conducted on calibrated test stands. The surveillance panel shall arrange an appropriate number of donated tests and ensure completion of the test program in a timely manner.

A6.4 *Intervals Between Reference-Oil Tests*—Under special circumstances, such as extended downtime caused by industry-wide parts or fuel shortages, the TMC may extend the intervals between reference-oil tests.

A6.5 *Introducing New Reference Oils*—Reference oils produce various results. When new reference oils are selected, participating laboratories will be requested to conduct their share of tests to enable the TMC to recommend industry test targets. ASTM surveillance panels require a minimum number of tests to establish the industry test targets for new reference oils.

A6.6 *TMC Information Letters*—Occasionally it is necessary to revise the test method, and notify the test laboratories of the change, prior to consideration of the revision by Subcommittee D02.B0. In such a case, the TMC issues an Information Letter. Information Letters are balloted semi-annually by Subcommittee D02.B0, and subsequently by D02. By this means, the Society due process procedures are applied to these Information Letters.

A6.6.1 *Issuing Authority*—The authority to issue an Information Letter differs according to its nature. In the case of an Information Letter concerning a part number change which does not affect test results, the TMC is authorized to issue such a letter. Long-term studies by the surveillance panel to improve the test procedure through improved operation and hardware control may result in the issuance of an Information Letter. If obvious procedural items affecting test results need immediate

attention, the test sponsor and the TMC issue an Information Letter and present the background and data supporting that action to the surveillance panel for approval prior to the semiannual Subcommittee D02.B0 meeting.

A6.7 *TMC Memoranda*—In addition to the Information Letters, supplementary memoranda are issued. These are developed by the TMC and distributed to the appropriate surveillance panel and participating laboratories. They convey such information as batch approvals for test parts or materials, clarification of the test procedure, notes and suggestions of the collection and analysis of special data that the TMC may request, or for any other pertinent matters having no direct effect on the test performance, results, or precision and bias.

A7. ASTM TEST MONITORING CENTER: RELATED INFORMATION

A7.1 *New Laboratories*—Laboratories wishing to become part of the ASTM Test Monitoring System will be requested to conduct reference-oil tests to ensure that the laboratory is using the proper testing techniques. Information concerning fees, laboratory inspection, reagents, testing practices, appropriate committee membership, and rater training can be obtained by contacting the TMC Director.

A7.2 *Information Letters: COTCO Approval*—Authority for the issuance of Information Letters was given by the committee on Technical Committee Operations in 1984, as follows: "COTCO recognizes that D02 has a unique and complex situation. The use of Information Letters is approved providing each letter contains a disclaimer to the affect that such has not obtained ASTM consensus. These Information Letters should be moved to such consensus as rapidly as possible."

A7.3 *Precision Data*—The TMC determines the precision of test methods by analyzing results of calibration tests conducted on reference oils. Precision data are updated regularly. Current precision data can be obtained from the TMC.

A8. CHRYSLER PENTASTAR BUILD DATA WORKSHEET

A8.1 Record general engine build information in Table A8.1.

A8.3 Record main bearing size selection in Table A8.2 and Table A8.3.

A8.4 Record the connecting rod bore measurements in Table A8.4.

A8.6 Record camshaft end play in Table A8.5.

A8.8 Record cylinder bore measurements in Table A8.6.

A8.9 Record the ring end gap in Table A8.7.

TABLE A8.1 General Build Data

Test #: _____	Date: _____
Block Assembled by: _____	Build Completed Date: _____
Lab Engine #: _____	Crankshaft serial #: _____
Right Head Number #: _____	Crysler Block Code: _____
ID numbers	
Micrometer: _____	Taper Gage: _____
Bore Gage: _____	Dial Indicator: _____
Torque Wrench ⅜ in.: _____	Torque Wrench ½ in.: _____

TABLE A8.2 Main Bearing Selection

Engine #: _____ Buildup Mechanic: _____
Run #: _____ Date: _____

Bore #

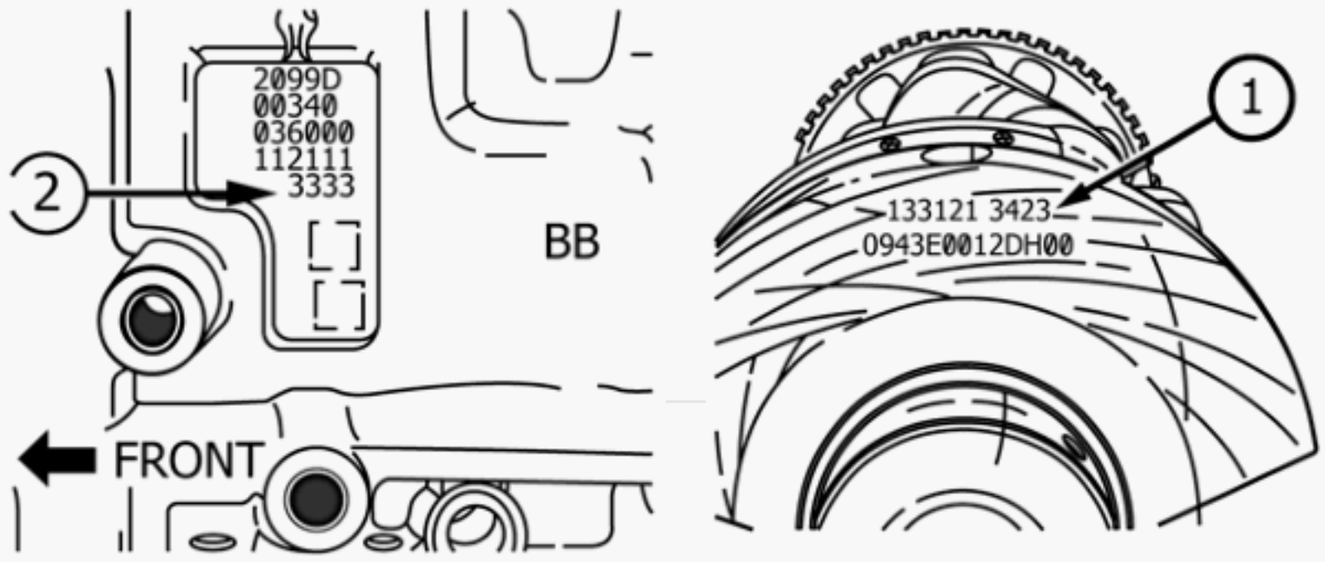

Upper/Lower main bearing selection from Table A8.3[A]

	Engine Block Marking	Crankshaft Marking	Bearing
1			/
2			/
3			/
4			/

[A] Upper bearing grade will always be equal to or lesser than the lower bearing grade.

TABLE A8.3 Main Bearing Selection Table

Engine Block Marking	Crankshaft Marking				
	1	2	3	4	5
1	1/1	1/2	2/2	2/3	3/3
2	1/2	2/2	2/3	3/3	3/4
3	2/2	2/3	3/3	3/4	4/4
4	2/3	3/3	3/4	4/4	4/5
5	3/3	3/4	4/4	4/5	5/5
Upper/lower main bearings to achieve 0.024 mm to 0.50 mm oil clearance.					

TABLE A8.4 Connecting Rod Bore Measurements

Engine #: _____

Run #: _____

Buildup Mechanic: _____

Date: _____

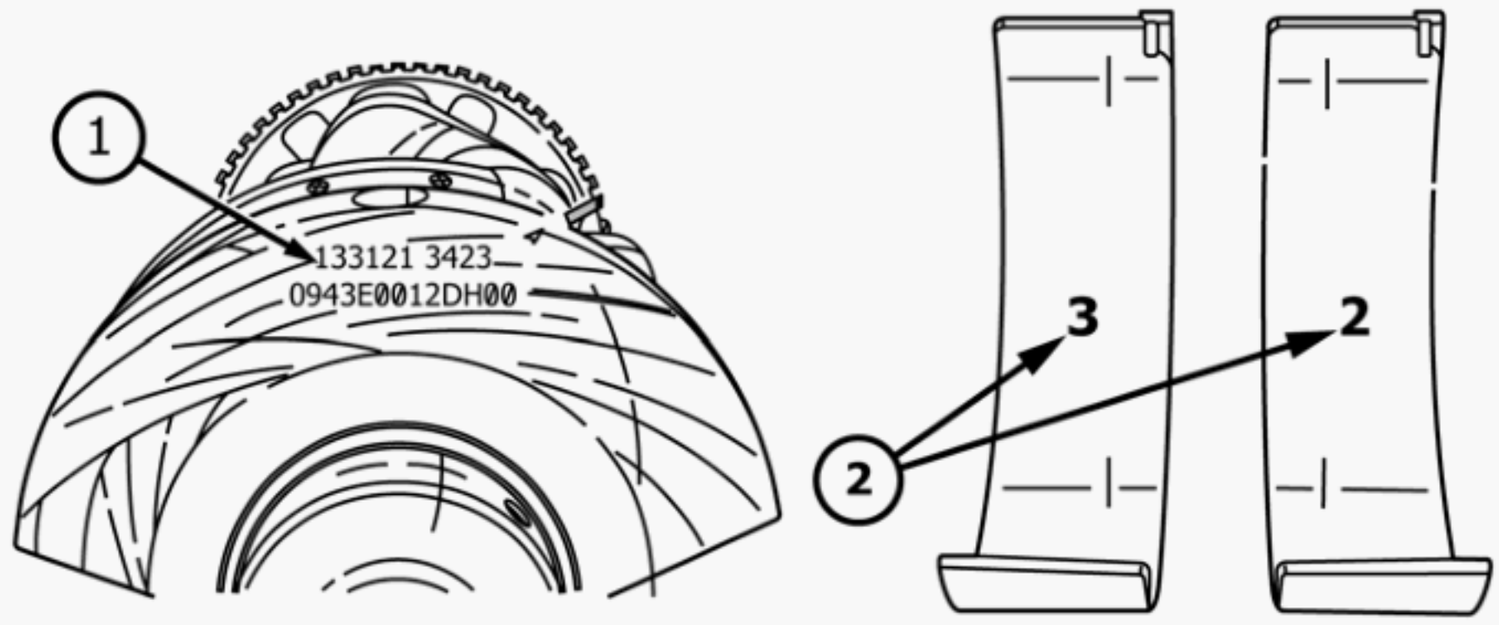

Rod Bearing Size

Rod #	Marking on Crank (1)	Marking on Bearing (2)
1		
2		
3		
4		
5		
6		

Crankshaft End Play: _____ mm

Factory Specification: 0.050 mm to 0.290 mm

TABLE A8.5 Camshaft End Play

Engine #: _____ Buildup Mechanic: _____

Run #: _____ Date: _____

Camshaft End Play (mm)

	Bank 1		Bank 2		Factory Specification
	Right Intake	Right Exhaust	Left Intake	Left Exhaust	
SOT[A]					0.075 mm to 0.251 mm
EOT					

[A] Start of test.

TABLE A8.6 Cylinder Bore Measurements

Engine #: _____ Date Honed: _____
Bore Gage Set at: _____ mm Honed By: _____

Cylinder Bore Measurement

Transverse Diameter (mm)

	Top:	Middle:	Bottom:	Taper:[A]
1				
2				
3				
4				
5				
6				

Longitudinal Diameter (mm)

	Top:	Middle:	Bottom:	Taper:[A]
1				
2				
3				
4				
5				
6				

Microfinish Roughness parameters:

	Rk	Rpk	Rvk	Rz	Mr2
1					
2					
3					
4					
5					
6					

[A] Record taper as the difference between top and bottom positions.

TABLE A8.7 Ring End Gap

Engine #: _____ Buildup Mechanic: _____
_____
Run #: _____ Date: _____
_____

Ring End Gap in Honed Block (in.)

Cylinder	Top Compression	2nd Compression	Test Specification
1			Top
2			0.023 in. to 0.027 in.
3			
4			2nd
5			0.033 in. to 0.037 in.
6			

A9. SEQUENCE IIIH TEST REPORT FORMS AND DATA DICTIONARY

A9.1 Download the standardized report form set and data dictionary from the ASTM Test Monitoring Center[31] or obtain them in hardcopy format from the TMC. The contents of the report form set are as follows:

1. Title/Validity Declaration Page — Form 1
2. Table of Contents — Form 2
3. Summary of Test Method — Form 3
4. Test Result Summary — Form 4
5. Operational Summary — Form 5
6. Oil Consumption Data Plot — Form 6
7. Used Oil Analysis — Form 7
8. Used Oil Analysis — Form 7a
9. Summary of Ring Sticking — Form 8
10. Summary of Piston Deposits — Form 9
11. Blowby Values and Plot — Form 10
12. Viscosity Increase Plot — Form 11
13. Hardware Information — Form 12
14. Downtime Report Form — Form 13
15. Test Comments — Form 14
16. American Chemistry Council Code of Practice Test Laboratory Conformance Statement — Form 15

A10. SEQUENCE IIIH OIL LEVEL AND CONSUMPTION WORKSHEET

A10.1 Record oil levels and consumption in Table A10.1.

A10.2 Record oil volume in Table A10.2.

TABLE A10.1 Oil Level and Consumption Worksheet

NOTE 1—Oil level at the end of initial run: _____ mL

Initial Fill: 5.92 L	Initial Run	At 20 h	At 40 h	At 60 h	At 80 h	EOT	EOT Total
Add 177 mL of new oil to purge container							
Remove 472 mL purge							
Remove 236 mL analysis sample							
Remove 59 mL analysis sample							
Replace 472 mL purge and new oil mix	[A]						
Dipstick mark after drain down, mm							
Difference between new and current oil levels, mL							
New oil added – analysis sample							
20 h oil consumption, mL							
Performed by:							

[A] Purge only. No new oil added at initial and EOT oil levels.

TABLE A10.2 Determination of Volume of Engine Oil in Pan

mm on dipstick	mL in pan	mm on dipstick	mL in pan	mm on dipstick	mL in pan
3	500	48	2300	77	4100
5	600	50	2400	78	4200
7	700	52	2500	79	4300
10	800	54	2600	80	4400
12	900	57	2700	81	4500
15	1000	60	2800	82	4600
18	1100	62	2900	83	4700
20	1200	63	3000	84	4800
22	1300	65	3100	85	4900
25	1400	67	3200	86	5000
28	1500	68	3300	87	5100
30	1600	69	3400	88	5200
32	1700	70	3500	89	5300
35	1800	72	3600	90	5400
38	1900	73	3700	92	5500
40	2000	74	3800	93	5600
43	2100	75	3900	94	5700
45	2200	76	4000	95	5800

A11. ACCELERATOR PEDAL POSITION SENSOR SIMULATOR CIRCUIT

A11.1 The purpose of this circuit is to provide two voltages to the ECU that duplicate the output of the APP sensor (see Footnote *A* to Table 1).

A11.1.1 A block diagram of the circuit is shown in Fig. A11.1.

A11.1.1.1 The items in the dashed box replace the OE pedal.

A11.1.1.2 The dc signal 1 (APP1) varies between 0.42 V and 4.55 V and the dc signal 2 (APP2) varies between 0.21 V and 2.27 V for accelerator positions 0 % to 100 %. Note that APP2 is exactly half of APP1. This is accomplished by using 2 voltage output modules with one providing half the output of the other.

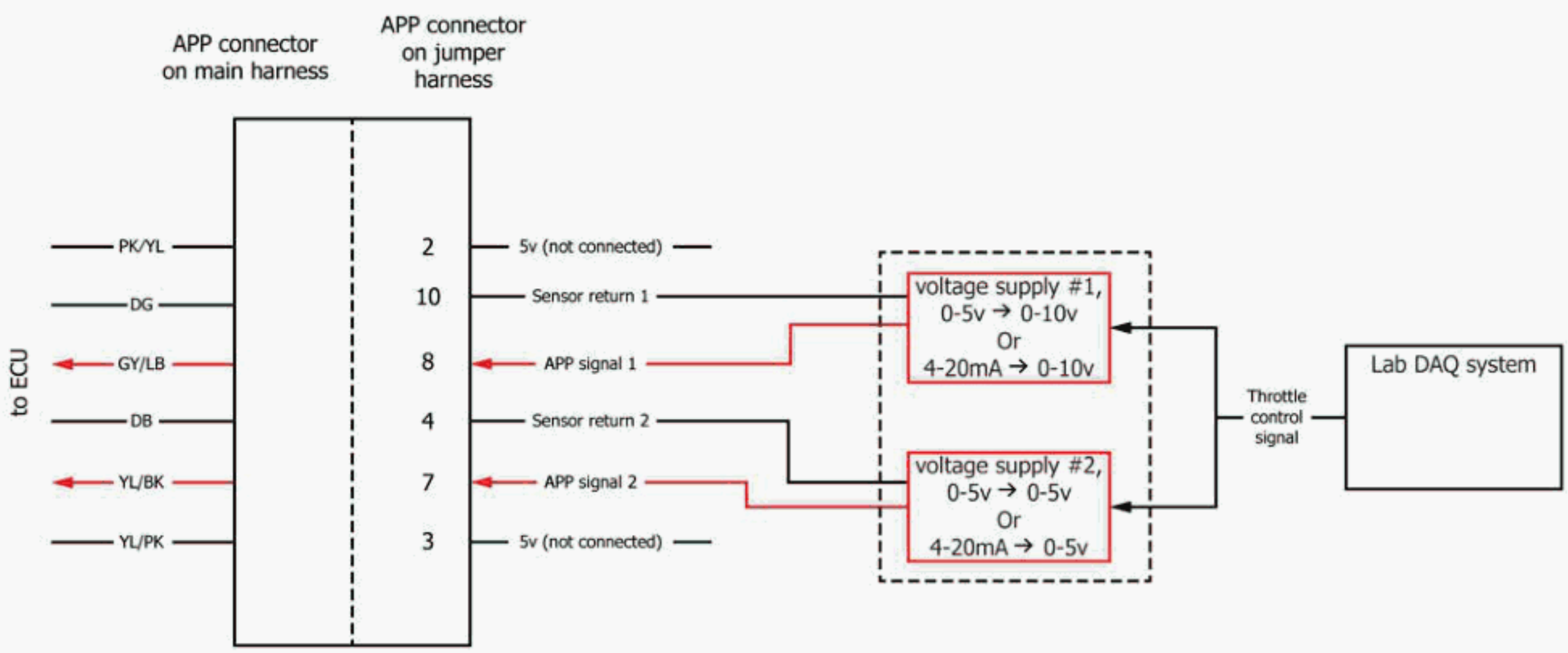

FIG. A11.1 Block Diagram for Chrysler 3.6 L Pentastar Accelerator Pedal Position Simulator Circuit

A11.1.1.3 Dataforth output modules SCM5B49 and SCM5B32[38,10] have been found to be acceptable for this application when the data acquisition (DAQ) system control signal is voltage and current, respectively. Mount either module on a Dataforth dual channel backpanel SCMPB04-02.[38,10] Use a dc power supply of 5 V.

A11.1.1.4 Ensure that the minimum dc voltage provided through this circuit at 0 % throttle (idle) corresponds to APP1 = 0.42 V and APP2 = 0.21 V otherwise a "limp home" mode will be induced and the engine will be forced to 1500 r/min.

[38] The sole source of supply of this equipment known to the committee at this time is Dataforth Corporation, 3331 E. Hemisphere Loop, Tuscon, AZ, 85706–5011, USA, Tel: 800 444 7644, www.dataforth.com.

A12. SEQUENCE IIIH TEST FUEL ANALYSIS

TABLE A12.1 Sequence IIIH Test Fuel Analysis (Haltermann HF003 Test Fuel)

Quantity, units	Method	Haltermann HF003 Specification		
		Minimum	Target	Maximum
Distillation – IBP	ASTM D86	23.9		35
5 %, °C				
10 %, °C		48.9		57.2
20 %, °C				
30 %, °C				
40 %, °C				
50 %, °C		93.3		110.0
60 %, °C				
70 %, °C				
80 %, °C				
90 %, °C		151.7		162.8
95 %, °C				
Distillation – EP				212.8
Percent recovery (volume fraction), %	ASTM D86		Report	
Percent residue (volume fraction), %	ASTM D86		Report	
Percent loss (volume fraction), %	ASTM D86		Report	
API gravity (@60 °F/60 °F), °API	ASTM D4052	58.7		61.2
Density (@15 °C), kg/L	ASTM D4052	0.734		0.744
Reid vapor pressure, kPa	ASTM D5191	60.8		63.4
Reid vapor pressure, kPa	ASTM D323		Report	
Mass fraction carbon, %	ASTM D3343		Report	
Mass fraction carbon, %	ASTM E191		Report	
Mass fraction hydrogen, %	ASTM E191		Report	
Ratio hydrogen/carbon, mole/mole	ASTM E191		Report	
Mass fraction oxygen, %	ASTM D4815			0.05
Mass fraction sulfur, mg/kg	ASTM D5453	3		15
Lead concentration, mg/L	ASTM D3237			2.6
Phosphorus concentration, mg/L	ASTM D3231			1.3
Composition aromatics (volume percent), %	ASTM D1319	26.0		32.5
Composition olefins (volume percent), %	ASTM D1319			10.0
Composition saturates (volume percent), %	ASTM D1319		Report	
Concentration particulate matter, mg/L	ASTM D5452			1
Oxidation stability, min.	ASTM D525	240		
Copper corrosion	ASTM D130			1
Gum concentration (washed), mg/100mL	ASTM D381			5
Fuel economy numerator/C density	ASTM E191	2401		2441
C factor	ASTM E191		Report	
Research octane number	ASTM D2699	96.0		
Motor octane number	ASTM D2700		Report	
Sensitivity		7.5		
Net heating value, J/kg	ASTM D3338		Report	
Net heating value, J/kg	ASTM D240		Report	
Color, 1.75 ptb	VISUAL		Red	

A12.1 See Table A12.1.

APPENDIXES

(Nonmandatory Information)

X1. SEQUENCE IIIHA TEST PROCEDURE

X1.1 *Overview:*

X1.1.1 The Sequence IIIHA test was developed to generate a used oil sample for subsequent testing of apparent viscosity in the mini-rotary viscometer using Test Method D4684. No parts ratings or measurements are required in the Sequence IIIHA test.

X1.2 *Preparation of Apparatus*—Prepare the Sequence IIIHA test engine as described in Section 9. No special preparations are required or permitted on test engines for Sequence IIIHA use.

X1.3 *Calibration:*

X1.3.1 The Sequence IIIHA test can be calibrated either alone or together with the Sequence IIIH and the Sequence IIIHB.

X1.3.2 No special calibration of stand instrumentation is required for Sequence IIIHA testing.

X1.3.3 Calculate severity adjustment for MRV using the LTMS Control Chart Guidelines available from the TMC and record the severity adjustment on Form 4 of the Sequence IIIHA Report Forms.[31]

NOTE X1.1—All subsequent references in this appendix to Forms and Form numbers refer to footnote 29 and the Sequence IIIHA report form set.

X1.3.4 A Sequence IIIHA test counts as one run against the Sequence IIIH calibration period in which it is run. A test run as a combined Sequence IIIH/Sequence IIIHA test counts as only one run against the calibration period.

X1.3.5 *Quality Index*—Calculate quality index results for Sequence IIIHA test results as described in 10.4.7 and 10.4.9.

X1.4 *Test Procedure*—The Sequence IIIHA test can be conducted in one of two ways:

X1.4.1 *Combined Sequence IIIH/Sequence IIIHA Test*—If both Sequence IIIH and Sequence IIIHA test results are required, conduct the test in the normal manner as described in this Test Method, including all ratings, measurements, and used oil analyses. Report the Sequence IIIH test results on the Sequence IIIH report from set[31] as described in Section 13 and complete Sections X1.5 – X1.6 to obtain results for the Sequence IIIHA test. Report the Sequence IIIHA test results on the Sequence IIIHA report from set.[31]

X1.4.2 *Stand-alone Sequence IIIHA Test*—If only a Sequence IIIHA test result is required, carry out the engine operating procedure described in Section 11 and then complete Sections X1.5 – X1.6 to obtain results for the Sequence IIIHA test. Report the Sequence IIIHA results on the Sequence IIIHA report form set.

X1.5 *Determination of Results:*

X1.5.1 Perform mini-rotary viscometer (MRV) measurements using Test Method D4684 and cold cranking simulator (CCS) measurements using Test Method D5293 on the EOT sample.

X1.5.1.1 Report the results on Form 4.

X1.5.1.2 Start the MRV test within 504 h of EOT of the engine test.

X1.5.1.3 Upend the sample for MRV testing five times before starting the test.

X1.5.1.4 Use the CCS result to determine the temperature for performing the MRV measurement.

X1.5.2 Perform these CCS and MRV measurements with the following exceptions:

X1.5.2.1 *Non-reference Oils:*

X1.5.2.2 Perform the CCS test on the EOT sample at the temperature specified in SAE J300 for the viscosity grade involved. Report results on Form 4.

X1.5.2.3 If a passing CCS result is obtained, perform the MRV test at the temperature specified in J300 for the fresh oil viscosity grade. If a failing CCS result is obtained, perform the MRV test at the same temperature as that used for the CCS measurement (that is, one grade higher based on SAE J300). Report the MRV test results along with the test temperature and yield stress as follows:

(a) Report non-reference oil results >400 000 mPa·s as 400 000 mPa·s and use this value to calculate MRV viscosity. Do not adjust results beyond 400 000 mPa·s, by severity adjustment, correction factor, or both. Report 400 000 mPa·s on Form 4. Record both the industry correction factor and severity adjustment as zero on Form 4, and note in the comments section on Form 11 that both the severity adjustment and industry correction factor used were zero.

(b) If a yield stress less than 35 Pa is obtained at the designated temperature, report the yield stress as "<35 Pa" to indicate that the yield stress did not exceed 35 Pa.

(c) Report the results on Form 4.

(d) Report non-reference oil results >400 000 mPa·s as >400 000 mPa·s and use 400 000 mPa·s to calculate MRV viscosity. Do not adjust beyond 400 000 mPa·s. In those situations where application of industry correction factor results in a value >400 000 mPa·s, report the result as >400 000 mPa·s.

X1.5.2.4 *Reference Oils:*

X1.5.2.5 Perform the CCS test on the EOT sample at the temperature specified in SAE J300 for the viscosity grade involved.

X1.5.2.6 Regardless of the CCS result obtained, perform all reference oil MRV tests at –30 °C.

(a) Report reference oil results >400 000 mPa·s as 400 000 mPa·s and use 400 000 mPa·s to calculate MRV viscosity. Do not adjust results beyond 400 000 mPa·s. In those

situations where the application of an industry correction factor results in a value >400 000 mPa·s, report as 400 000 mPa·s

X1.5.2.7 *Kinematic Viscosity Increase Greater than 500 %:*

X1.5.2.8 If the increase in kinematic viscosity of the EOT sample exceeds 500 % the CCS and the MRV tests on the EOT samples are not required. A notation is required in the comments section of Form 11 indicating that the CCS and MRV were not run; enter not measured (NM) in Form 4.

X1.5.2.9 *Straight-Grade Oils:*

X1.5.2.10 If the test oil is a straight-grade oil, CCS and MRV measurements are not required. A notation is required in the Comments section of Form 11 indicating that the CCS and MRV were not run; enter not measured (NM) in Form 4.

X1.6 *Report*—Report Sequence IIIHA tests as described in Section 13, except that the Sequence IIIHA standard report form set and data dictionary is used.

X1.7 *Precision and Bias:*

X1.7.1 *MRV*—The precision and bias of this test method for measuring the MRV apparent viscosity are specified in Test Method D4684. The precision and bias of the engine test used to generate the IIIHA oil sample are as follows:

X1.7.2 *Sequence IIIHA:*

X1.7.2.1 *Precision and Bias*—Section 14, with the exception of 14.1.4, applies.

TABLE X1.1 Test Precision for Sequence IIIHA[A]

Quantity, units	Intermediate Precision[B]		Reproducibility[C]	
	S_{ip}[D]	*ip*	S_R[D]	*R*
Apparent viscosity (MRV) at EOT, mPa·s	0.622	1.742	0.622	1.742

[A] These statistics are based on 40 tests conducted on 8 stands at 5 laboratories on ASTM TMC Reference Oils 434-2, 436, and 438-1, and were calculated on June 6, 2016.
[B] See 14.1.2.
[C] See 14.1.3.
[D] *S* is the estimated standard deviation.

X1.7.2.2 The test precision for the Sequence IIIHA is shown in Table X1.1. The TMC updates precision data frequently; contact the TMC for this information.

X2. SEQUENCE IIIHB TEST PROCEDURE

X2.1 *Overview*—The Sequence IIIHB test was developed to generate used oil samples to measure the phosphorus retention of a test lubricant after 90 h of Sequence IIIH test operation. No parts ratings or other Sequence IIIH measurements are required in the Sequence IIIHB test.

X2.2 *Preparation of Apparatus*—Prepare the Sequence IIIHB test engine as described in Section 9. No special preparations are required or permitted on test engines for Sequence IIIHB testing.

X2.3 *Calibration*:

X2.3.1 The Sequence IIIHB test can be calibrated either alone or together with the Sequence IIIH and the Sequence IIIHA.

X2.3.2 No special calibration of stand instrumentation is required for Sequence IIIHB testing.

X2.3.3 A Sequence IIIHB test counts as one run against the Sequence IIIH calibration period in which it was run. A test run as a combined Sequence IIIH, IIIHA, or IIIHB test counts as only one run against the calibration period.

X2.3.4 *Quality Index*—Calculate quality index results for a Sequence IIIHB test as described in 10.4.7 and 10.4.9.

X2.4 *Test Procedure*—The Sequence IIIHB test can be conducted in one of two ways:

X2.4.1 *Stand-alone Sequence IIIHB Tes*—If only a Sequence IIIHB test result is needed, conduct the test in the normal manner as detailed in Section 11. At the end of test, report all results as a stand-alone Sequence IIIHB test using the Sequence IIIHB report from set.[31]

NOTE X2.1—All subsequent references in this appendix to Forms and Form numbers refer to footnote 29 and the Sequence IIIHB report from set.

X2.4.2 *Combined Sequence IIIH, IIIHA, IIIHB Sequence Test*—If Sequence IIIH, IIIHA, and IIIHB test results are required, conduct the test in the normal manner. Complete all forms in the standard Sequence IIIH, IIIHA, and IIIHB report form sets, including all ratings, measurements, and used oil analyses.

X2.4.3 *Testing Oil Samples for Element Concentration*—Use Inductively Coupled Plasma Atomic Emission Spectrometry (ICP-AES) Analysis, Test Method D5185, to determine the mass fraction of the following 15 elements: aluminum, boron, calcium, copper, iron, potassium, magnesium, manganese, molybdenum, sodium, phosphorus, lead, silicon, tin, and zinc for the fresh oil, the initial oil sample (that is, that sample removed from the engine following the initial run-in (see 11.2.3)), and the 90 h, EOT oil sample.

X2.4.3.1 Run all samples, initial and end-of-test, sequentially, in duplicate, using the same calibration (that is, as close in time as practical). Background correction, internal standard, and peristaltic pump are required. Use sample dilutions of at least 19+1 mass/mass (that is, 19 parts solvent by mass to one part solute test oil by mass). Once a dilution is established, use it for all samples from a test.

X2.4.3.2 Report the average of the two determinations as the final result. If the duplicate determinations are outside the repeatability calculations shown in the "Repeatability" Table in Section 1 of Test Method D5185, follow the procedure shown in the subsection entitled "*Significance of Repeatability (r)*" of Test Method D3244.

X2.4.3.3 Report all sample concentrations in mg/kg on Form 7.

X2.5 *Determination of Results*:

X2.5.1 *Phosphorus Retention Calculation*:

X2.5.1.1 Using the element concentrations reported in X2.4.3.3, ascertain and report on Form 7 which of the detergent metals sodium, calcium, or magnesium has the highest concentration in the fresh oil.

X2.5.1.2 Determine the phosphorus retention, P_{ret}, using Eq X2.1:

$$P_{ret} = [w\ (M_i) / w\ (M_{EOT})] \times [w\ (P_{EOT}) / w\ (P_i)] \times 100,\ \% \quad (X2.1)$$

where:

P_{ret} = the phosphorus retention expressed as %,
M = the detergent metal with the highest concentration in the fresh oil,
$w(M_i)$ = the mass fraction of metal M in the initial oil sample, mg/kg,
$w(M_{EOT})$ = the mass fraction of metal M at EOT, mg/kg,
$w(P_i)$ = the mass fraction of phosphorus in the initial oil sample, mg/kg, and
$w(P_{EOT})$ = the mass fraction of phosphorus in the EOT sample, mg/kg.

X2.5.1.3 *Phosphorus Retention Industry Correction Factor*—Calculate severity adjustment for phosphorus retention using the LTMS Control Chart Guidelines available from the TMC and record the severity adjustment on Form 4 of the Sequence IIIB report form set.

X2.6 *Report*—Report Sequence IIIHB tests as described in Section 14, using Forms 4 and 6.

X2.7 *Precision and Bias*—Section 14, with the exception of 14.1.4, applies.

TABLE X2.1 Test Precision for Sequence IIIHB[A]

Quantity, units	Intermediate Precision[B]		Reproducibility[C]	
	S_{ip}[D]	*ip*	S_R[D]	*R*
Phosphorus retention (P_{ret}), %	1.362	3.814	1.802	5.406

[A] These statistics are based on 40 tests conducted on 8 stands at 5 laboratories on ASTM TMC Reference Oils 434-2, 436, and 438-1, and were calculated on June 6, 2016.
[B] See 14.1.2.
[C] See 14.1.3.
[D] *S* is the estimated standard deviation.

X2.7.1 The test precision for the Sequence IIIHB is shown in Table X2.1. The TMC updates precision data frequently; contact the TMC for this information.

X3. PROCUREMENT OF COMPONENTS LISTED IN TABLES 1, 2, AND 3

X3.1 The following entries provide the contact information for the suppliers of the components listed in Tables 1-3. If substitutions are deemed appropriate for the specified suppliers, obtain permission in writing from the TMC before such will be considered to be equivalent.

X3.1.1 *Suppliers Listed in* Table 1:

X3.1.1.1 OH Technologies Inc., P.O. Box 5039, Mentor, OH 44061–5039, USA, www.ohtech.com.

X3.1.1.2 J-Tec Associates, Inc., 5005 Blairs Forest Ln. NE, Suite L, Cedar Rapids, IA 52402, USA, www.j-teccassociates.com.

X3.1.1.3 TMC: ASTM Test Monitoring Center, 6555 Penn Ave., Pittsburgh, PA 15206–4489, USA, www.astmtmc.cmu.edu.

X3.1.1.4 International Machine Tool & Service (IMTS) Co., 8460 Ronda Dr., Canton, MI 48187, USA, www.imtsind.com.

X3.1.1.5 Dyne Systems: 3602 West Wheelhouse Rd., Milwaukee, WI 53208, USA, www.dynesystems.com.

X3.1.2 *Suppliers Listed in* Table 2:

X3.1.2.1 Mopar is the registered trade mark of Chrysler Group Customer Care, P.O. Box 21–8004, Auburn Hills, MI 48321–8004, USA, www.mopar.com.

X3.1.2.2 International Machine Tool & Service (IMTS) Co., 8460 Ronda Dr., Canton, MI 48187, USA, www.imtsind.com.

X3.1.2.3 OH Technologies Inc. P.O. Box 5039, Mentor, OH 44061–5039, USA, www.ohtech.com.

X3.1.3 *Suppliers Listed in* Table 3:

X3.1.3.1 Badger Meter, 4545 W. Brown Deer Rd., P.O. Box 245036, Milwaukee, WI 53224–9536, USA, www.badgermeter.com.

X3.1.3.2 Kinetic Engineering Corp., 2055 Silber Rd., Suite 101A, Houston, TX 77055, USA, www.kineticengineering.com.

X3.1.3.3 Micro Motion Americas, 7070 Winchester Circle, Boulder, CO 80301, USA, www.emersonprocess.com.

SUMMARY OF CHANGES

Subcommittee D02.B0 has identified the location of selected changes to this standard since the last issue (D8111 – 18a) that may impact the use of this standard. (Approved May 1, 2019.)

(1) Revised Table 1, Table 2, and Table 3.
(2) Added new subsection 10.4.8 and new Table 6.
(3) Revised subsections 6.6.2, 6.6.2.2, and X2.4.3.1.
(4) Added new Fig. 1.
(5) Added new subsection X3.1.1.5.

Subcommittee D02.B0 has identified the location of selected changes to this standard since the last issue (D8111 – 18) that may impact the use of this standard. (Approved Oct. 1, 2018.)

(1) Revised Introduction to add new Alternative Supplier Protocol agreed by TMC.
(2) Added Test Method D3244 to Referenced Documents.
(3) Revised Table 1 to reflect the change of the supplier and part number for the PCM.
(4) Added new subsection X3.1.1.4 to identify a new supplier, ITMS.
(5) Revised subsection X1.5.2.3(*a*) and added new X1.5.2.3(*d*) to allow for reporting of CCS values >400 000 mPa·s,
(6) Revised subsection X1.5.2.6 to require MRV tests for reference oils to be conducted at –30 °C.
(7) Added new subsection X1.5.2.6(*a*) regarding the reporting of CCS values >400 000 mPa·s.
(8) Added new subsections X2.4.3.1 and X2.4.3.2; revised subsection X2.4.3.3.

Subcommittee D02.B0 has identified the location of selected changes to this standard since the last issue (D8111 – 17) that may impact the use of this standard. (Approved April 1, 2018.)

(1) Revised subsection 6.1.4, clarifying air flow on electronic components.
(2) Revised subsection 6.2.2.2, clarifying placement of fan directing air flow.
(3) Added subsection 6.2.3, clarifying use of shielding on the exhaust system.
(4) Revised subsection 6.12.1, clarifying crankcase ventilation with a scavenger fan.
(5) Added subsection 10.1.1, clarifying the effective date of a reference test.
(6) Added subsection 10.1.2, clarifying test start time.
(7) Added subsection 10.5, clarifying test numbering system.
(8) Revised Table A10.1 and Table A10.2 to correct typographical errors.
(9) Revised Fig. A3.1.

ASTM International takes no position respecting the validity of any patent rights asserted in connection with any item mentioned in this standard. Users of this standard are expressly advised that determination of the validity of any such patent rights, and the risk of infringement of such rights, are entirely their own responsibility.

This standard is subject to revision at any time by the responsible technical committee and must be reviewed every five years and if not revised, either reapproved or withdrawn. Your comments are invited either for revision of this standard or for additional standards and should be addressed to ASTM International Headquarters. Your comments will receive careful consideration at a meeting of the responsible technical committee, which you may attend. If you feel that your comments have not received a fair hearing you should make your views known to the ASTM Committee on Standards, at the address shown below.

This standard is copyrighted by ASTM International, 100 Barr Harbor Drive, PO Box C700, West Conshohocken, PA 19428-2959, United States. Individual reprints (single or multiple copies) of this standard may be obtained by contacting ASTM at the above address or at 610-832-9585 (phone), 610-832-9555 (fax), or service@astm.org (e-mail); or through the ASTM website (www.astm.org). Permission rights to photocopy the standard may also be secured from the Copyright Clearance Center, 222 Rosewood Drive, Danvers, MA 01923, Tel: (978) 646-2600; http://www.copyright.com/