This international standard was developed in accordance with internationally recognized principles on standardization established in the Decision on Principles for the Development of International Standards, Guides and Recommendations issued by the World Trade Organization Technical Barriers to Trade (TBT) Committee.

Designation: E102/E102M – 93 (Reapproved 2021)

Standard Test Method for Saybolt Furol Viscosity of Bituminous Materials at High Temperatures[1]

This standard is issued under the fixed designation E102/E102M; the number immediately following the designation indicates the year of original adoption or, in the case of revision, the year of last revision. A number in parentheses indicates the year of last reapproval. A superscript epsilon (ε) indicates an editorial change since the last revision or reapproval.

1. Scope

1.1 This test method covers the empirical procedures for determining the Saybolt Furol viscosities of bituminous materials at specified temperatures between 120 and 240 °C [248 and 464 °F].

1.2 The values stated in either SI units or inch-pound units are to be regarded separately as standard. The values stated in each system may not be exact equivalents; therefore, each system shall be used independently of the other. Combining values from the two systems may result in nonconformance with the standard.

1.3 *This standard does not purport to address all of the safety concerns, if any, associated with its use. It is the responsibility of the user of this standard to establish appropriate safety, health, and environmental practices and determine the applicability of regulatory limitations prior to use.* See 8.1.

1.4 *This international standard was developed in accordance with internationally recognized principles on standardization established in the Decision on Principles for the Development of International Standards, Guides and Recommendations issued by the World Trade Organization Technical Barriers to Trade (TBT) Committee.*

2. Referenced Documents

2.1 *ASTM Standards:*[2]

D88/D88M Test Method for Saybolt Viscosity
D92 Test Method for Flash and Fire Points by Cleveland Open Cup Tester
D140/D140M Practice for Sampling Asphalt Materials
E1 Specification for ASTM Liquid-in-Glass Thermometers
E11 Specification for Woven Wire Test Sieve Cloth and Test Sieves

3. Terminology

3.1 *Definitions:*

3.1.1 *Furol*—an acronym of "fuel and road oils."

3.1.2 *Saybolt Furol viscosity*—the corrected efflux time in seconds of 60 mL of sample flowing through a calibrated Furol orifice under specified conditions. The viscosity value is reported in Saybolt Furol seconds, abbreviated SFS, at a specified temperature.

4. Summary of Test Method

4.1 The efflux time in seconds of 60 mL of sample, flowing through a calibrated orifice, is measured under carefully controlled conditions. The time is corrected by an orifice factor and reported as the viscosity of the sample at that temperature.

5. Significance and Use

5.1 This test method is useful in characterizing certain bituminous materials, as one element in establishing uniformity of shipments and sources of supply.

5.2 This test method is an extension of Test Method D88/D88M.

6. Apparatus

6.1 *Saybolt Furol Viscometer and Bath,* as shown and described in Test Method D88/D88M, Fig. 1 and Annex A1. An external heater may also be used, but if so, it shall be more than 51 mm [2 in.] from the viscometer. An aluminum-block, constant-temperature bath is also acceptable, and no stirring device is required with this type of bath.

6.2 *Displacement Ring,* as shown in Fig. 1, constructed of the same corrosion-resistant metal as the viscometer.

6.3 *Cover*—A metal cover for the viscometer, cylindrical with a flat top, approximately 57 mm [2¼ in.] in diameter and 7 mm [¼ in.] deep (Note 1). One hole slightly larger than the diameter of a viscosity thermometer shall be drilled in the center of the cover, and two smaller holes to permit the vertical rods of the displacement ring to pass through the cover.

NOTE 1—The cover of a 90-mL [3-oz] Gill-style ointment box fulfills these requirements.

6.4 *Thermometer Support,* as shown in Test Method D88/D88M, Fig. 3.

[1] This test method is under the jurisdiction of ASTM Committee D08 on Roofing and Waterproofing and is the direct responsibility of Subcommittee D08.05 on Solvent-Bearing Bituminous Compounds for Roofing and Waterproofing.

Current edition approved May 1, 2021. Published May 2021. Originally approved in 1954. Last previous edition approved in 2016 as E102/E102M – 93 (2016). DOI: 10.1520/E0102_E0102M-93R21.

[2] For referenced ASTM standards, visit the ASTM website, www.astm.org, or contact ASTM Customer Service at service@astm.org. For *Annual Book of ASTM Standards* volume information, refer to the standard's Document Summary page on the ASTM website.

Copyright © ASTM International, 100 Barr Harbor Drive, PO Box C700, West Conshohocken, PA 19428-2959. United States

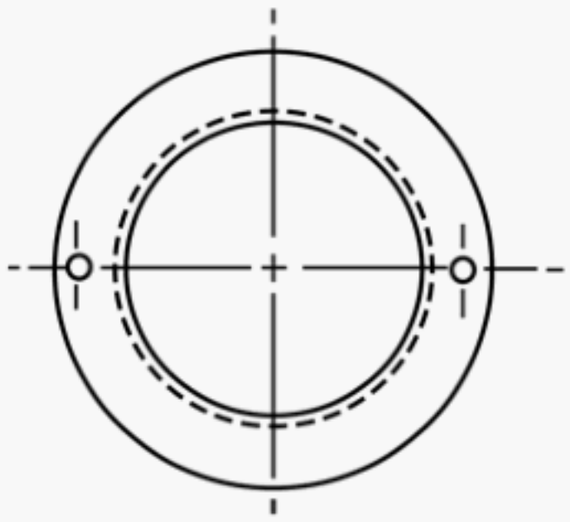

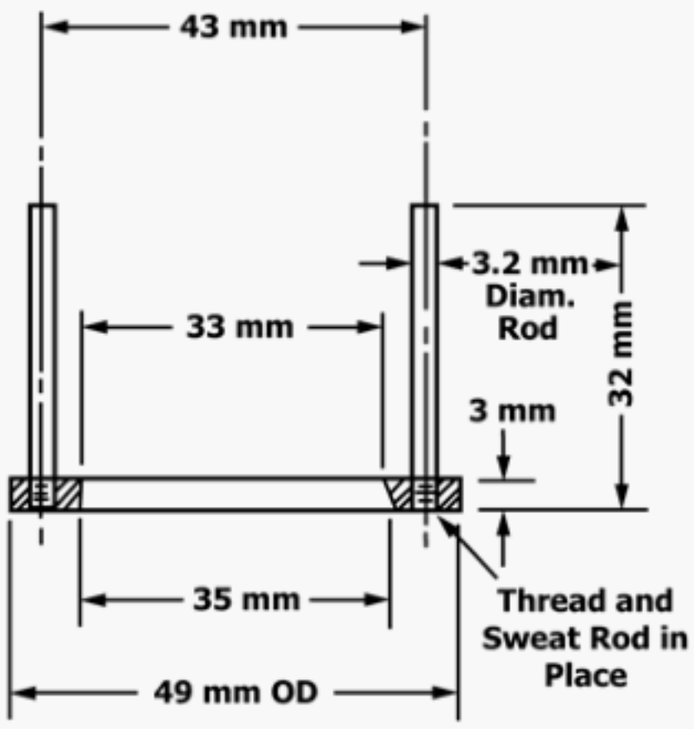

(Material: Corrosion-resistant metal.)

FIG. 1 Displacement Ring

6.5 *Saybolt Viscosity Thermometers,* as listed in Table 1, for reading the temperature of the sample. Each thermometer shall conform to the requirements listed in Specification E1 for that ASTM thermometer number.

6.6 *Bath Thermometers*—Saybolt Viscosity thermometers, or any other temperature-indicating means of equivalent accuracy.

6.7 *Sieve,* 850 µm [No. 20], conforming to the requirements of Specification E11.

6.8 *Receiving Flask,* as shown in Test Method D88/D88M, Fig. 5.

TABLE 1 ASTM Saybolt Viscosity Thermometers

Standard Test Temperature, °C [°F]	ASTM Thermometer Number[A]	Thermometer	
		Range,° F	Subdivisions, °F
121 [250]	77F	245 to 265	0.5
135 [275]	108F	270 to 290	0.5
149 [300]	78F	295 to 315	0.5
163 [325]	109F	320 to 340	0.5
177 [350]	79F	345 to 365	0.5
204 [400]	80F	395 to 415	0.5
232 [450]	81F	445 to 465	0.5

[A] Comparable thermometers calibrated in °C are not available.

6.9 *Timer,* graduated in fifths or tenths of a second, and accurate to within 0.1 % when tested over a 60-min interval. Electric timers are acceptable if operated on a controlled frequency circuit.

6.10 *Hot Plate,* electric, approximately 200 mm [8 in.] in diameter, with a three-heat switch, rated at 1200 W at the high heat setting and 500 to 600 W at the medium heat setting.

7. Sampling

7.1 Sample the material in accordance with Practice D140/D140M.

8. Preparation of Apparatus

8.1 Clean the viscometer thoroughly with xylene, remove all solvent from the viscometer and its gallery, and dry well. Clean the displacement ring and receiving flask in the same manner. Xylene is a toxic and flammable solvent; all working areas shall be efficiently hooded and kept free of sparks and open flames. If the viscometer is hot, vaporization of xylene can be reduced by filling the tube rapidly and immediately allowing it to flow out through the orifice. A wooden toothpick may be useful in cleaning the orifice.

NOTE 2—The viscometer may be kept clean by filling with cylinder oil immediately after each test and allowing the oil to remain in the viscometer for several minutes before draining and cleaning with xylene as described above. If desired, the viscometer may be kept filled with cylinder oil between runs, draining and cleaning with xylene just before each test.

8.2 Set up the viscometer and bath in an area where they will not be exposed to drafts or rapid changes in air temperature, and dust or vapors that might contaminate a sample.

8.3 Place the receiving flask beneath the viscometer so that the graduation mark on the flask is from 100 to 130 mm [4 to 5 in.] below the bottom of the viscometer tube, and so that the stream of liquid will just touch the neck of the flask.

8.4 Fill the bath to at least 6 mm [¼ in.] above the overflow rim of the viscometer with an appropriate bath medium for the selected test temperature:

8.4.1 Use SAE 40 grade oil for test temperatures up to 149 °C [300 °F].

8.4.2 For temperatures above 149 °C [300 °F], use a cylinder oil having a viscosity of approximately 175 to 185 SUS at 98.9 °C [210 °F], and a minimum flash point of 300 °C [572 °F] when tested in accordance with Test Method D92.

8.4.3 Change the bath medium periodically, and clean the outside walls of the tubes to remove any carbon deposits.

8.5 Provide adequate stirring and thermal control for the bath so that the temperature of a test sample in the viscometer will not vary more than 0.3 °C [0.5 °F] after reaching the selected test temperature.

9. Calibration and Standardization

9.1 Calibrate the Saybolt Furol viscometer at periodic intervals in accordance with Test Method D88/D88M, Section 9, and calculate the correction factor for the viscometer.

9.2 Do not use viscometers or orifices requiring corrections greater than ±1 %.

10. Procedure

10.1 Establish and control the bath temperature at the selected test temperature.

10.1.1 Standard test temperatures for measuring Saybolt Furol viscosities of bituminous materials are 121, 135, 149, 163, 177, 204, and 232 °C [250, 275, 300, 325, 350, 400, and 450 °F].

10.2 Insert a cork stopper, having a cord attached for its easy removal, into the air chamber at the bottom of the viscometer. The cork shall fit tightly enough to prevent the escape of air, as evidenced by the absence of oil on the cork when it is withdrawn later as described.

10.3 Place the displacement ring in the gallery of the viscometer.

10.4 Preheat a 0.5-kg [1-lb] sample in a 500-mL [16-oz] seamless tin box of the deep type on the electric hot plate to about 10 to 15 °C [18 to 27 °F] above the selected test temperature.

10.4.1 Use the medium-temperature setting on the hot plate for the first half hour, and the high-temperature setting for the remainder of the heating period. Avoid overheating initially because this might cause some oxidation of the sample and alter its viscosity.

10.4.2 Stir the sample occasionally during the early stages of heating, but employ continuous stirring for the last 28 °C [50 °F].

10.4.3 Complete the preheating in 2 h or less, and proceed immediately with the viscosity determination. Reheating of any sample shall not be permitted.

10.5 Preheat the 850-µm [No. 20] sieve to the selected test temperature, and pour the heated sample through the sieve directly into the viscometer until the level is just above the overflow rim.

NOTE 3—Just enough sample should overflow so that later removal of the displacement ring will cause the excess to flow into the gallery without completely filling it.

10.6 Place the cover on the viscometer over the displacement ring, and insert the appropriate viscosity thermometer equipped with the thermometer support through the hole in the center of the cover.

10.7 Stir the sample in the viscometer continuously with the thermometer, using a circular motion at 30 to 50 rpm in a *horizontal* plane to avoid whipping air into the sample. Take care to avoid striking the orifice.

10.8 When the sample temperature remains constant within 0.3 °C [0.5 °F] of the test temperature during 1 min of continuous stirring, withdraw the thermometer and remove the cover from the viscometer. Immediately remove the displacement ring, check to be sure that the excess sample in the gallery is below the level of the overflow rim, and replace the cover on the viscometer.

10.9 Check to be sure that the receiving flask is in proper position; then snap the cork from the viscometer using the attached cord, and start the timer at the same instant. The elapsed time from filling the viscometer to snapping the cork shall not exceed 15 min.

10.10 Stop the timer the instant the sample reaches the graduation mark on the receiving flask. Record the efflux time in seconds to the nearest 0.1 or 0.2 s.

11. Calculation and Report

11.1 Multiply the efflux time by the correction factor for the viscometer determined in 9.1.

11.2 Report the corrected efflux time as the Saybolt Furol viscosity of the material at the temperature at which the test was made.

11.2.1 Report values below 200 s to the nearest 0.5 s. Report values of 200 s or higher to the nearest whole second.

12. Precision and Bias

12.1 Results should not differ from the mean by more than the following:

12.1.1 *Repeatability (one operator and apparatus)*—1 %.

12.1.2 *Reproducibility (different operators and apparatus)*—2 %.

13. Keywords

13.1 bituminous; high temperature; Saybolt Furol; viscosity

ASTM International takes no position respecting the validity of any patent rights asserted in connection with any item mentioned in this standard. Users of this standard are expressly advised that determination of the validity of any such patent rights, and the risk of infringement of such rights, are entirely their own responsibility.

This standard is subject to revision at any time by the responsible technical committee and must be reviewed every five years and if not revised, either reapproved or withdrawn. Your comments are invited either for revision of this standard or for additional standards and should be addressed to ASTM International Headquarters. Your comments will receive careful consideration at a meeting of the responsible technical committee, which you may attend. If you feel that your comments have not received a fair hearing you should make your views known to the ASTM Committee on Standards, at the address shown below.

This standard is copyrighted by ASTM International, 100 Barr Harbor Drive, PO Box C700, West Conshohocken, PA 19428-2959, United States. Individual reprints (single or multiple copies) of this standard may be obtained by contacting ASTM at the above address or at 610-832-9585 (phone), 610-832-9555 (fax), or service@astm.org (e-mail); or through the ASTM website (www.astm.org). Permission rights to photocopy the standard may also be secured from the Copyright Clearance Center, 222 Rosewood Drive, Danvers, MA 01923, Tel: (978) 646-2600; http://www.copyright.com/