This international standard was developed in accordance with internationally recognized principles on standardization established in the Decision on Principles for the Development of International Standards, Guides and Recommendations issued by the World Trade Organization Technical Barriers to Trade (TBT) Committee.

Designation: E788 – 97 (Reapproved 2019)

# Standard Specification for Pipet, Blood Diluting[1]

This standard is issued under the fixed designation E788; the number immediately following the designation indicates the year of original adoption or, in the case of revision, the year of last revision. A number in parentheses indicates the year of last reapproval. A superscript epsilon (ε) indicates an editorial change since the last revision or reapproval.

## 1. Scope

1.1 This specification covers requirements for glass reusable blood diluting pipets that are used for performing red and white cell corpuscle determinations.

1.2 The values stated in SI units are to be regarded as standard. No other units of measurement are included in this standard.

1.3 *This international standard was developed in accordance with internationally recognized principles on standardization established in the Decision on Principles for the Development of International Standards, Guides and Recommendations issued by the World Trade Organization Technical Barriers to Trade (TBT) Committee.*

## 2. Referenced Documents

2.1 *ASTM Standards:*[2]

E694 Specification for Laboratory Glass Volumetric Apparatus

E920 Specification for Commercially Packaged Laboratory Apparatus

E921 Specification for Export Packaged Laboratory Apparatus

E1133 Practice for Performance Testing of Packaged Laboratory Apparatus for United States Government Procurements

E1157 Specification for Sampling and Testing of Reusable Laboratory Glassware

## 3. Classification

3.1 This specification covers two different pipet designs and permissible alternatives.

3.1.1 Red and white cell blood diluting pipets (see Fig. 1).

3.1.2 Permissible alternative designs (see Fig. 2).

## 4. Materials

4.1 The pipets shall be made of common spirit bore white back tubing or clear glass with a white stripe applied to the outer surface of the tubing.

4.2 The beads shall be made of glass or ceramic composition and shall be of red, clear, or white coloring.

## 5. Dimensions and Permissible Variations

5.1 *Design*—The red and white cell blood dilution pipets shall consist of a small uniform bore glass tube which shall have a bulb of proper size near the proximal end (see Fig. 1). As an alternative, the pipets may be constructed of three pieces of glass that are fused together to form a one-piece pipet (see Fig. 2). The bulb shall contain a nonspherical glass or ceramic bead sufficiently large enough to prevent its being impacted in the constriction portion of the bulb. The cross section of the pipet at any point shall be circular. The distal end of the white cell pipet shall be pulled to a point and then ground and polished to a tapered tip. The distal end of the red cell pipet shall be ground and polished to a tapered tip. The inside diameter (ID) of the pipet bore at the tip end of the white cell pipet shall be 0.2 to 0.5 mm. The external diameter of the ground and polished tip shall not exceed 2.0 mm. The overall length of both pipets shall be 104 to 121 mm. The proximal end may be of funnel design, with an exterior taper, or ground and polished with a taper of sufficient angle to permit application of a rubber suction tube or other suction device (see Fig. 2).

5.2 *Capacity*—The capacity of the red cell pipet bulb shall be 0.8 to 1.2 $cm^3$and the capacity of the white cell bulb shall be 0.2 to 0.4 $cm^3$. The capacity of the red cell pipet stem (bulb to distal end) shall be 0.008 to 0.012 $cm^3$ and the capacity of the white cell pipet stem shall be 0.02 to 0.04 $cm^3$.

5.3 *Capacity Markings:*

5.3.1 *Pipet Bulb Markings*—The red and white cell pipet bulb capacity shall be confined to and indicated by calibration lines on the pipet. These lines shall be located on both sides of the bulb and shall be within 2 mm to 6 mm above the bulb (proximal end) and within 3 mm to 6 mm below the bulb (distal end). The exact manner for measuring these line placements is specified in Fig. 1.

5.3.2 *Pipet Stem Markings*—The graduation lines on the stem of the red and white cell pipets shall be equally divided into two or ten divisions. If there are two divisions, the two

[1] This specification is under the jurisdiction of ASTM Committee E41 on Laboratory Apparatus and is the direct responsibility of Subcommittee E41.01 on Laboratory Ware and Supplies.

Current edition approved July 1, 2019. Published August 2019. Originally approved in 1981. Last previous edition approved in 2013 as E788 – 97(2013). DOI: 10.1520/E0788-97R19.

[2] For referenced ASTM standards, visit the ASTM website, www.astm.org, or contact ASTM Customer Service at service@astm.org. For *Annual Book of ASTM Standards* volume information, refer to the standard's Document Summary page on the ASTM website.

Copyright © ASTM International, 100 Barr Harbor Drive, PO Box C700, West Conshohocken, PA 19428-2959. United States

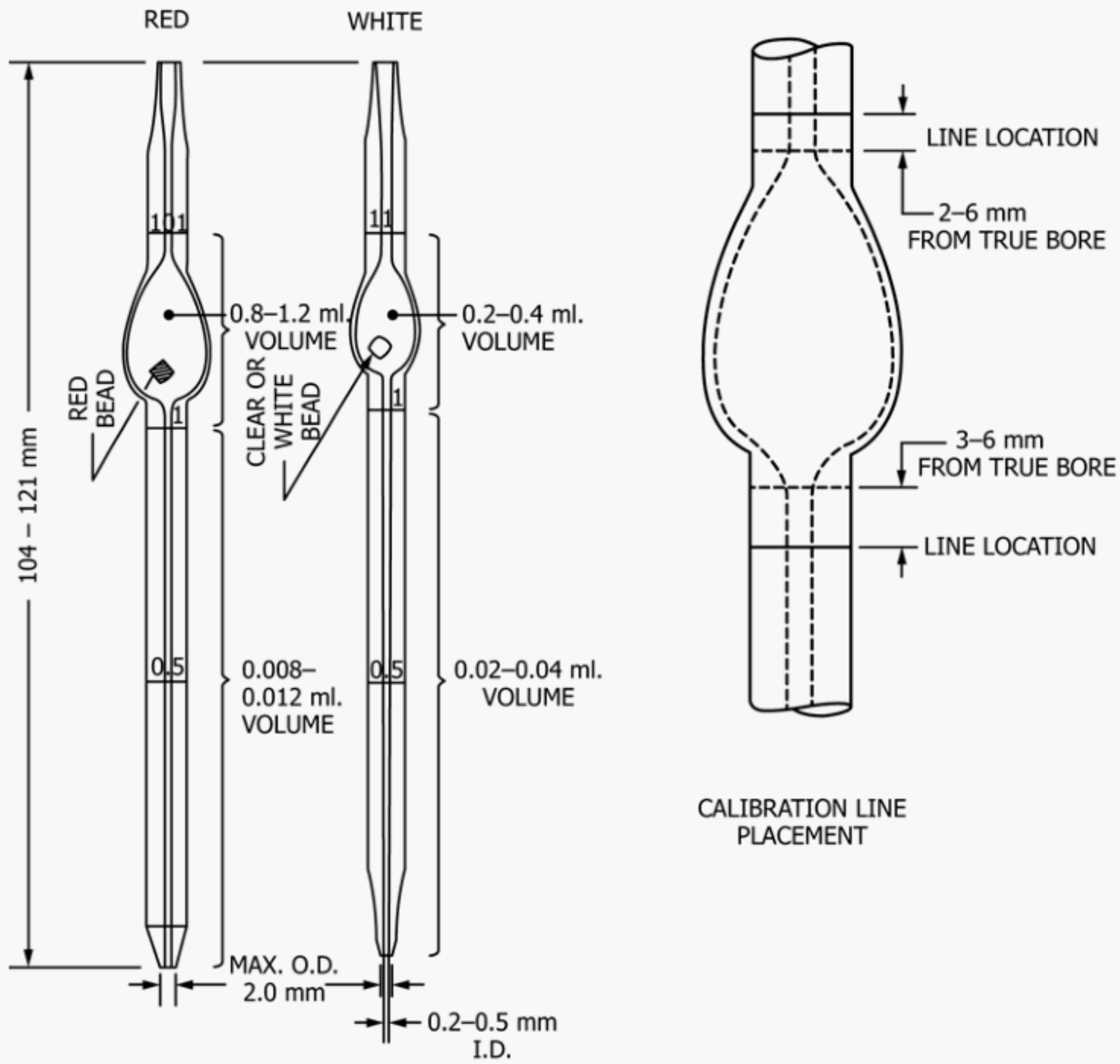


**FIG. 1 Pipet Dimensions**

calibration lines on the stem will be numbered 0.5 and 1. If there are ten divisions, the ten calibration lines will be numbered 0.5 on the fifth line and 1 on the tenth line respectively. The top line (above bulb at the proximal end) shall be numbered 101 on the red cell pipet and 11 on the white cell pipet, representing stem and bulb volume collectively. At the option of the manufacturer, pipet stems may be graduated with split lines or partial length lines (see Fig. 2).

5.4 *Graduation Lines*—All graduation lines on the red and white cell pipets shall be at right angles to the pipet axis and parallel to each other. The thickness of the graduation lines shall not exceed 0.4 mm.

5.5 *Accuracy*—The red and white cell pipet bulb volume shall be a volumetric ratio to the stem volume. The red cell pipet bulb to stem ratio shall be 100:1 and the white cell pipet bulb to stem ratio shall be 10:1 when tested in accordance with 6.1 and 6.2.

5.6 *Workmanship:*

5.6.1 The pipets shall be free of defects that detract from their appearance or impair their serviceability.

5.6.2 Construction shall be such that the mechanical strength is provided to withstand the rigors of normal use. The pipets shall be free of strain when tested in accordance with 6.4.

5.7 *Identification*—Each pipet shall have the name or registered trademark of the manufacturer. These markings are to be located on the stem of the pipet directly opposite the graduation lines. The manufacturer has the option to state the pipet volumetric tolerances on the pipet. These tolerances may be located on the stem or the proximal end of the pipet.

5.7.1 The white cell pipet shall have a clear or white glass or ceramic bead sealed within the bulb to identify it readily as a white cell pipet.

5.7.2 The red cell pipet shall have a red glass or ceramic bead sealed within the bulb to identify it readily as a red cell pipet.

5.8 *Pigmentation*—All markings shall be permanently fused in or on the pipet. The markings shall be dark amber or black in color. When tested in accordance with 6.3, the pigmentation shall not discolor the solution. The appearance of the markings,

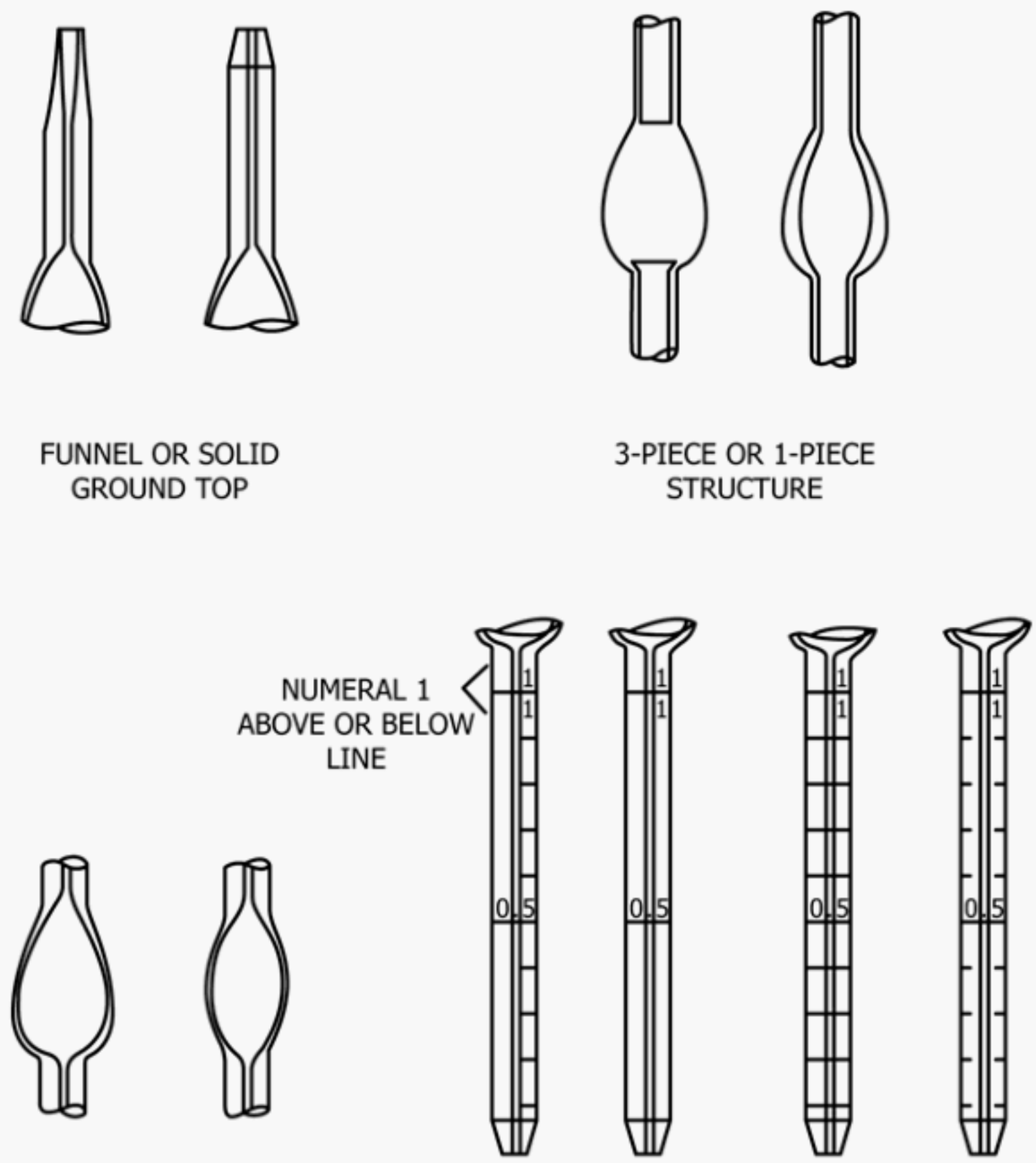


**FIG. 2 Permissible Alternatives**

when viewed by the eye under normal room lighting, shall be the same after testing as before testing.

## 6. Testing

6.1 *Accuracy*—Accuracy for these pipets shall be ±5 % for red cell pipets and ±3.5 % for white cell pipets. If $V$ represents the volume between the calibration lines immediately above and below the bulb, $V_1$ represents the volume of the capillary stem between the pipet tip and the calibration line numbered 1, and $V_2$ represents the volume of the capillary stem between the tip and the calibration line numbered 0.5, the volumetric tolerances shall be as stated in Specification E694 and expressed as follows:

6.1.1 *Red Cell Pipets*—Nominal ratio 100:1
$V/V_1$ shall not be less than 95 or more than 105
$V/V_2$ shall not be less than 190 or more than 210

6.1.2 *White Cell Pipets*—Nominal ratio 10:1
$V/V_1$ shall not be less than 9.65 or more than 10.35
$V/V_2$ shall not be less than 19.30 or more than 20.70

6.2 *Accuracy Determination*— $V_2$, $V_1$, and $V$ shall be determined by use of distilled water and a weighing device having a weight sensitivity no less than 0.001 mg.

6.2.1 The weight of a dry red or white cell pipet shall be taken first and recorded. This indication shall be subtracted from the weight indications of the red or white cell pipet filled with distilled water to the lines numbered 0.5, 1, 101, or 11 respectively. The weight of the water at temperature $T$, is to be converted to volume at 20 °C. The net weight indications represent $V_2$, $V_1$, and $V$ factors given in 6.1.1 and 6.1.2.

6.3 *Pigmentation Test*—Freshly prepare a chromic acid cleaning solution by combining 200 g of sodium dichromate ($Na_2 Cr_2 O_7 \cdot 2H_2 O$), 1000 mL of water, and 1500 mL of sulfuric acid ($H_2 SO_4$, ACS Reagent 95 to 98 %). Immerse the pipets in the chromic acid solution. Let stand at room temperature (20 to 25 °C) for 15 min. Remove the pipets from the solution and thoroughly rinse in distilled water. Dry the pipets by rubbing vigorously, 5 to 10 strokes, with a laboratory cloth

or tissue. The appearance of the markings should be the same as before the test, when judged by the eye under normal room lighting.

6.4 *Strain-Free Test*—The pipets shall be free from strain when viewed under a polariscope.

6.5 For additional sampling and testing data, see Specification E1157.

## 7. Packaging

7.1 For packaging, select from either Specification E920, Specification E921, or Practice E1133.

## 8. Keywords

8.1 blood; glass; pipets

*ASTM International takes no position respecting the validity of any patent rights asserted in connection with any item mentioned in this standard. Users of this standard are expressly advised that determination of the validity of any such patent rights, and the risk of infringement of such rights, are entirely their own responsibility.*

*This standard is subject to revision at any time by the responsible technical committee and must be reviewed every five years and if not revised, either reapproved or withdrawn. Your comments are invited either for revision of this standard or for additional standards and should be addressed to ASTM International Headquarters. Your comments will receive careful consideration at a meeting of the responsible technical committee, which you may attend. If you feel that your comments have not received a fair hearing you should make your views known to the ASTM Committee on Standards, at the address shown below.*

*This standard is copyrighted by ASTM International, 100 Barr Harbor Drive, PO Box C700, West Conshohocken, PA 19428-2959, United States. Individual reprints (single or multiple copies) of this standard may be obtained by contacting ASTM at the above address or at 610-832-9585 (phone), 610-832-9555 (fax), or service@astm.org (e-mail); or through the ASTM website (www.astm.org). Permission rights to photocopy the standard may also be secured from the Copyright Clearance Center, 222 Rosewood Drive, Danvers, MA 01923, Tel: (978) 646-2600; http://www.copyright.com/*