This international standard was developed in accordance with internationally recognized principles on standardization established in the Decision on Principles for the Development of International Standards, Guides and Recommendations issued by the World Trade Organization Technical Barriers to Trade (TBT) Committee.

Designation: F1094 – 87 (Reapproved 2020)

Standard Test Methods for Microbiological Monitoring of Water Used for Processing Electron and Microelectronic Devices by Direct Pressure Tap Sampling Valve and by the Presterilized Plastic Bag Method[1]

This standard is issued under the fixed designation F1094; the number immediately following the designation indicates the year of original adoption or, in the case of revision, the year of last revision. A number in parentheses indicates the year of last reapproval. A superscript epsilon (ε) indicates an editorial change since the last revision or reapproval.

1. Scope

1.1 These test methods cover sampling and analysis of high purity water from water purification systems and water transmission systems by the direct sampling tap and filtration of the sample collected in the bag. These test methods cover both the sampling of water lines and the subsequent microbiological analysis of the sample by the culture technique. The microorganisms recovered from the water samples and counted on the filters include both aerobes and facultative anaerobes.

1.2 Three methods are described as follows:

	Sections
Test Method A—Sample Tap—Direct Filtration	6 to 8
Test Method B—Presterilized Plastic Bag Technique	9 to 12
Test Method B2 —Dip Strip Technique[2]/Presterilized Plastic Bag	

1.3 *This standard does not purport to address all of the safety concerns, if any, associated with its use. It is the responsibility of the user of this standard to establish appropriate safety, health, and environmental practices and determine the applicability of regulatory limitations prior to use.*

1.4 *This international standard was developed in accordance with internationally recognized principles on standardization established in the Decision on Principles for the Development of International Standards, Guides and Recommendations issued by the World Trade Organization Technical Barriers to Trade (TBT) Committee.*

2. Referenced Documents

2.1 *ASTM Standards:*[3]

D1129 Terminology Relating to Water

D1193 Specification for Reagent Water

F60 Test Method for Detection and Enumeration of Microbiological Contaminants in Water Used for Processing Electron and Microelectronic Devices (Withdrawn 1991)[4]

F488 Test Method for On-Site Screening of Heterotrophic Bacteria in Water (Withdrawn 2005)[4]

3. Terminology

3.1 *Definitions:*

3.1.1 *total bacteria count*—number of viable heterotrophic bacteria capable of growing under test conditions specified.

3.1.1.1 *Discussion*—Total bacteria count is the general term for heterotrophic plate count, now commonly used. Heterotrophic bacteria are those microorganisms that cannot use CO_2 for food. They require more complex organic compounds for use as growth nutrients. The majority of bacteria fall into this major grouping.

3.1.2 For definition of other terms used in this test method, refer to Terminology D1129.

3.2 *Definitions of Terms Specific to This Standard:*

3.2.1 *presterilized plastic bag*—a commercial presterilized plastic bag of 200-mL capacity (or as appropriate to larger sample sizes) to hold sample water. The bag should have integral fold over tabs to allow for resealing.

3.2.2 *bacteriological monitor*—a commercial presterilized plastic filter holder containing a 0.45-µm membrane filter. (No other filter pore size should be used.)

[1] These test methods are under the jurisdiction of ASTM Committee F01 on Electronics and are the direct responsibility of Subcommittee F01.10 on Contamination Control.

Current edition approved April 15, 2020. Published May 2020. Originally approved in 1987. Last previous edition approved in 2012 as F1094–87(2012). DOI: 10.1520/F1094-87R20.

[2] The dip strip (Total Count Tester or SPC Sampler) method is permissible for waters containing >10 microorganisms per millilitre.

[3] For referenced ASTM standards, visit the ASTM website, www.astm.org, or contact ASTM Customer Service at service@astm.org. For *Annual Book of ASTM Standards* volume information, refer to the standard's Document Summary page on the ASTM website.

[4] The last approved version of this historical standard is referenced on www.astm.org.

Copyright © ASTM International, 100 Barr Harbor Drive, PO Box C700, West Conshohocken, PA 19428-2959. United States

NOTE 1—If a larger pore size filter is used, organisms may pass through the filter; a smaller pore size filter does not wick up sufficient growth media, hence the level of recovery will be less than that of the 0.45-µm filter.

3.2.3 *total count tester*—a paddle shaped plastic filter assembly containing a 0.45-µm membrane filter and dehydrated nutrient pad.

4. Summary of Test Method

4.1 *Test Method A—Sample Tap—Direct Filtration*—A sampling valve as or similar to that shown in Fig. 1 is installed in a pressurized line. The valve illustrated has a self closure and a male luer outlet fitting. This valve design minimized the chance of extraneous contamination. Any valve used for sampling should be constructed in a manner to reduce or prevent the retention of bacteria within its internal surfaces, and should be easily sanitized. The bacterial monitor is connected to either the luer outlet of the illustrated sampling valve, or in a suitable manner to an equivalent valve. The water sample is passed directly through the monitor, and the effluent volume is measured after this filtration. Test Methods F60 are then employed for bacteriological examination of the sample.

4.2 *Test Method B—Presterilized Plastic Bag*—The sampling valve is installed as in Test Method A, then flushed clean prior to taking the samples. The water sample is directly flowed into a presterilized, precalibrated plastic disposable bag. After sampling, the plastic bag is sealed and stored briefly prior to bacteriological analysis of the sample. The sample may be stored at room temperature if analyzed within 2 h, otherwise, it should be stored from 4 to to 10°C and analyzed within 6 h.

4.2.1 Sample analysis is conducted by either Test Methods F60 or Test Method F488 for bacterial content of the water.

5. Significance and Use

5.1 These test methods provide a field technique for the bacteriological analysis of electronic process waters. The sampling of these waters and subsequent bacteriological analysis may be critical to electronic product yields. Bacteria can be the prime source of harmful contamination which can significantly reduce the yield of satisfactory microelectronic device production.

5.2 The test methods described here may be used both to monitor the bacteriological quality of water used in microelectronic product processing, and to locate the source of bacterial contamination in a water purification system.

5.3 These test methods are simple field methods, combining sampling and bacteriological analysis techniques that do not require bacteriological laboratory facilities.

5.4 The test methods described employ culture techniques for bacteriological analysis. The user should be aware that such techniques cannot provide a complete count of the total viable bacteria present, since clumps and clusters of bacteria will appear as one single colony when cultured, and since some viable bacteria will not grow under the test conditions used. However, a meaningful comparative bacteria count will be achieved by this method if the culturing of the sample is always done at the same temperature, and for the same period of time. The temperature of incubation should always be at 28 ± 2°C, and the period of incubation should be 48 h (or 72 h if time

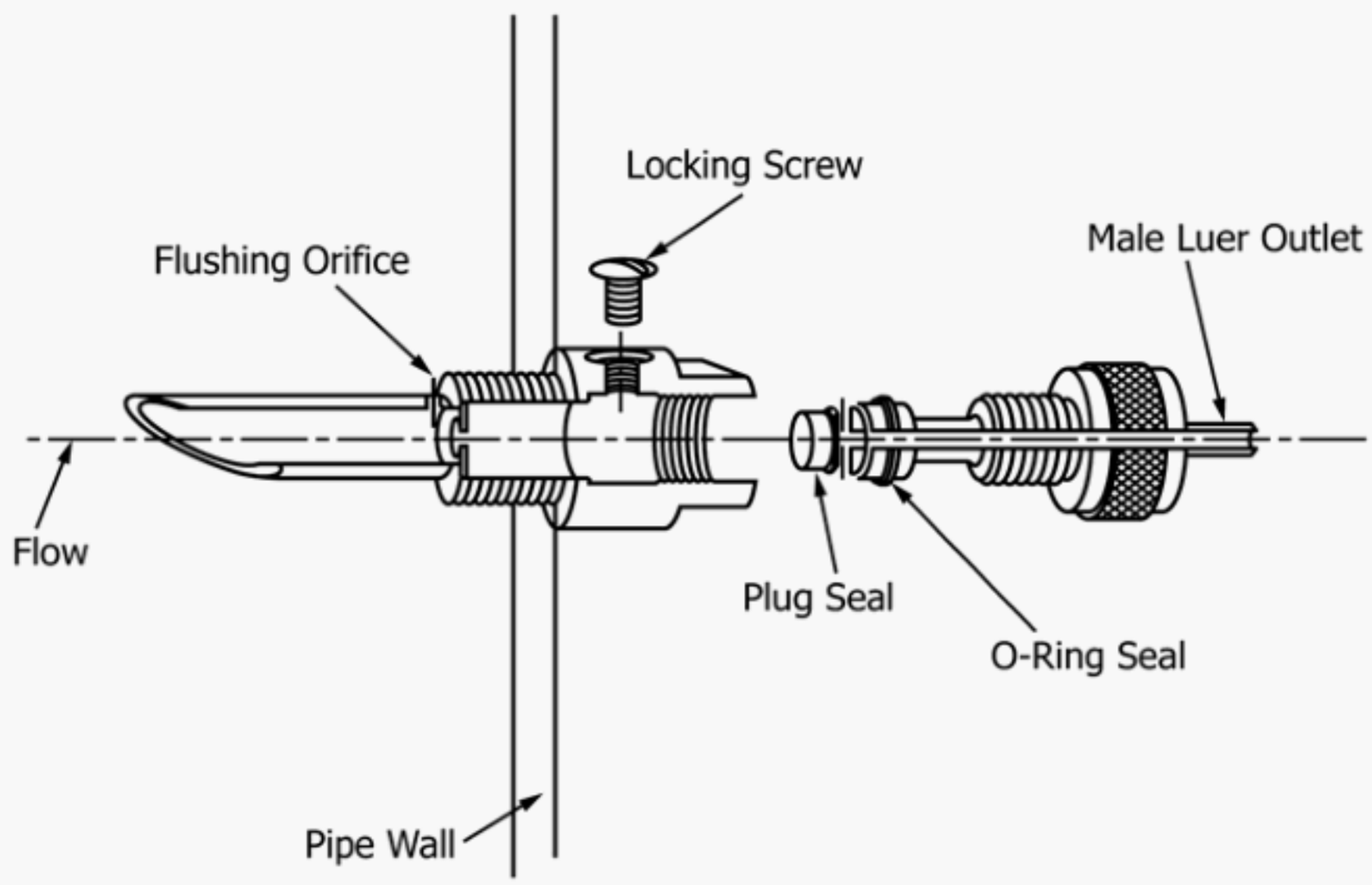

FIG. 1 Sampling Valve in Wall of Pressurized Line

permits). The period of incubation and temperature should be the same for all comparative studies.

TEST METHOD A—DIRECT SAMPLE TAP

6. Apparatus

6.1 *Sampling Tap,* [5] see Fig. 1.

6.2 *Bacteriological Monitor* [6] with 0.45-µm membrane filter.

6.3 *Sanitarians Kit,* [6] consisting of metal syringe, special two way valve, and stainless steel graduated cup.

6.4 *Forceps* [6] with blunt stainless, unserrated tips.

6.5 *Incubator* , capable of holding temperature within ±1°C in a range from 27 to 40°C.

6.6 *Illuminator,* 15 to 30-W incandescent or 8 to 10-W fluorescent are generally acceptable. If incandescent light is concentrated through or by a magnifying lens, a lower wattage may suffice.

6.7 *Magnifier,* 5 to 15 × for counting colonies. An illuminator hand magnifier or a stereoscopic (dissection-type) microscope are satisfactory.

6.8 *Hypodermic Needle,* No. 18, 2-in. blunt nose with plastic syringe.

7. Reagents and Materials

7.1 *Isopropyl alcohol,* 70 to 90 %, or 3 to 6 % semi-standard or reagent grade, hydrogen peroxide solution.

7.2 *Nutrient media*[6]—Supplied in double-tip scored ampoule or impervious plastic ampoule of either type listed:

7.2.1 Membrane heterotrophic plate count, *M-HPC Formulation:*

Peptone—2.0 g.
Gelatin—2.5 g.
Glycerol—1.0 mL.
Water (Reagent Grade IV)—100 mL (see Specification D1193).

7.2.2 Membrane tryptose extract, *M-TGE Formulation:*

Beef Extract—0.3 g.
Tryptone—0.5 g.
Glucose—0.1 g.
Water (Reagent Grade IV)—100 mL.

8. Procedure

8.1 *Sampling:*

8.1.1 Connect sampling valve to pressurized line as shown in Fig. 1.

8.1.2 With water system operating, open valve fully, flush for 60 s at fast flow rate, and close the valve.

8.1.3 Fill syringe with blunt nose No. 18 needle with 70 to 90 % isopropyl alcohol, (or 3 to 6 % semi-standard or reagent grade, hydrogen peroxide), and insert the 2-in. needle completely into the sampling valve outlet port.

8.1.4 Inject 5 mL of the sanitizing agent chosen into the sampling port and allow to stand for 1 min. Remove the needle from the outlet port, and squirt some of the agent on the outside of the male luer connector.

8.1.5 Flush the valve again for 1 min and close the valve.

8.1.6 Remove inlet and outlet caps from a bacteriological monitor. Place caps aside on a clean surface, and avoid contaminating the inner surfaces. Connect the monitor to the male luer outlet of the sampling valve, as shown in Fig. 2. Avoid finger contacts of inlet and outlets of monitor.

8.1.7 Open sampling valve, by turning counter-clockwise the knurled outlet body, and allow 100 mL (Note 2) of sample to pass through the monitor into a volumetric container. Close the valve.

NOTE 2—To compensate for the natural bacterial growth variability in different water samples, the size of sample tested should be chosen in relation to the expected count level of organisms for that particular sample. Therefore, a sample size of at least 100 mL or greater should be collected for "polished"' high purity water containing low bacterial counts (2 to 10 organisms per millilitre). For high count waters (>10 organisms per millilitre), the sample size may be as little as 1 mL.

8.1.8 Remove the monitor from the outlet luer and attach the syringe pump to the outlet side of the monitor. Draw the residual fluid from the monitor.

8.1.9 One of the two nutrient media (7.2.1 and 7.2.2) may be used for culturing the microorganisms collected in the water sample. If the M-HPC medium is chosen, the use of the plastic ampoule is described in 8.1.9.1. If the M-TGE medium is selected, the use of the double tip, scored glass ampoule is described in 8.1.9.2. If the latter is used, the tip of the ampoule should be flamed prior to use. The M-HPC medium has been found to be the preferred nutrient for analyzing high purity waters where, due to a lack of sufficient nutrients, organisms may be injured and consequently their growth could be inhibited by exposure to high nutrient media.

8.1.9.1 Remove the monitor from the syringe and hold it with membrane side up. Open plastic ampoule by twisting cap of container. Remove and discard. Align the opening at the tip of the ampoule to the inlet (top) of the monitor. Holding the ampoule in a vertical position, and pressing firmly to the inlet

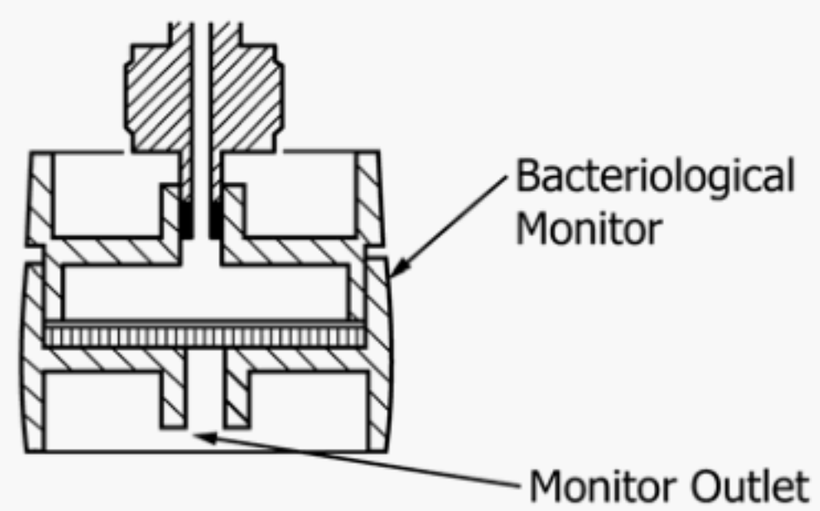

FIG. 2 Monitor on Luer Outlet of Sampling Valve

[5] The sole source of supply of valves, YY2004000, and YY20E4010 (catalogue number), known to the committee at this time is Millipore Corp., Bedford, MA. If you are aware of alternative suppliers, please provide this information to ASTM Headquarters. Your comments will receive careful consideration at a meeting of the responsible technical committee,[1] which you may attend.

[6] The sole source of supply of these products known to the committee at this time is Millipore Corp., Bedford, MA. If you are aware of alternative suppliers, please provide this information to ASTM Headquarters. Your comments will receive careful consideration at a meeting of the responsible technical committee,[1] which you may attend.

of the monitor, squeeze the contents drop by drop into the monitor, and onto the membrane surface. Remove the ampoule, attach a luer-slip syringe to the bottom opening of the monitor and draw medium gently through the membrane. Maintain a slight vacuum until all the medium passes through the membrane surface. Remove the syringe and proceed to 8.1.10.

8.1.9.2 Remove the monitor from syringe and hold it with the pad side (outlet side) up. Break or crunch the sleeve-covered tip of the ampoule between the inside of the forceps near the forceps handle. Holding the tip of a finger over the sleeve of the ampoule, break off the scored tip, insert it into the outlet port of the monitor, and using the ampoule in a pipet-like fashion, slowly release the 0.8-mL contents into the absorbent pad. Swirl the medium around the monitor until the pad is evenly covered. Remove the ampoule.

8.1.10 Replace the caps (avoiding contamination of their inner surfaces) on the monitor and place the monitor in the incubator at 28 ± 2°C, grid side down.

8.1.11 Incubate for 48 h at 28 ± 2°C.

8.2 *Counting Colonies:*

8.2.1 Colonies appear as clear white, yellow, or gray round spots 1 to 2 mm in diameter, and are counted under low power magnification, 5 to 10×. If there are fewer than about two colonies per grid square, count all the colonies on ten randomly chosen grid squares and multiply this count by ten to arrive at total number of colonies per filter.

8.2.2 Express results as the number of colonies per millilitre of water sample.

TEST METHOD B—PRESTERILIZED PLASTIC BAG SAMPLING

9. Apparatus

9.1 Commercial plastic bag,[6] presterilized, with volume calibration template and storage rack.

9.2 Same apparatus as in Test Method A, 6.1 through 6.8.

9.3 Alternative analysis equipment (permissible for water containing >10 organisms/millilitre):

9.3.1 *Total Count Water Tester,* [7] with M-TGE medium, or

9.3.2 *SPC Samples* [7] (see Fig. 3).

[7] The sole source of supply of total count water sampler, Cat. No. MT0000025 and SPC Sampler, Cat. No. MSPC00025, known to the committee at this time is Millipore Corp., Bedford, MA. If you are aware of alternative suppliers, please provide this information to ASTM Headquarters. Your comments will receive careful consideration at a meeting of the responsible technical committee, [1] which you may attend.

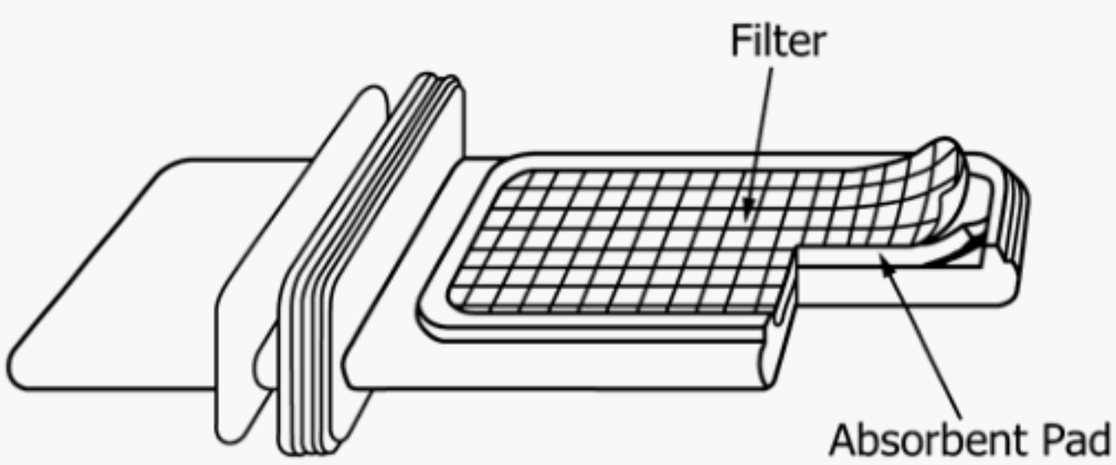

FIG. 3 Total Count Water Sampler or SPC Sampler

10. Reagents and Materials

10.1 See 7.1 through 7.2.2.

11. Procedure

11.1 *Sampling:*

11.1.1 Using the volume calibration template, premark the plastic bag at 100 mL (or as appropriate) prior to sampling.

11.1.2 Follow 8.1.1 through 8.1.5 from Procedure sections in Test Method A.

11.1.3 Open the bag by pulling the tabs and place the bag under the sample tap. Open the valve and allow the sample water to fill to the 100-mL mark (or to level as appropriate). Exercise care not to contaminate the inside surfaces of the presterilized bag while sampling.

11.1.4 Seal the plastic bag by pulling the tabs and wrapping the top of the bag with several turns, then bending the tabs toward the center of the bag. Place the filled bag in the storage rack.

11.2 *Analysis*—Conduct an analysis of the sample within 2 h if the sample is held at room temperature, or 6 h if sample is held from 4 to 10°C. Use either the monitor or the water tester method.

11.2.1 *Monitor Method of Analysis :*

11.2.1.1 Remove the plug from the upper part of the bacteriological monitor and insert the sampling tube adapter. Attach the syringe and valve pump to the lower monitor port.

11.2.1.2 Prior to opening the plastic sample bag, shake 20 to 30 times, then remove the protective envelope from the sampling tube, and insert the flexible sampling tube into the water sample in the bag. Pump the syringe pump plunger until the 100-mL (or larger) sample has been drawn through the bacteriological monitor. SeeTest Methods F60 for additional technique details.

11.2.1.3 Remove the sampling tube from the plastic bag, invert the sampling tube monitor assembly, and pump any residual water sample through the filter.

11.2.1.4 Remove the monitor from the syringe pump luer connector, and hold it with the pad side up.

11.2.1.5 Add M-SPC or M-TGE nutrient media to absorbent pad in monitor as in Test Method A, 8.1.9 and 8.1.10.

11.2.1.6 Incubate the monitor with the grid side down for 48 h at 28 ± 2°C.

TEST METHOD B2

11.2.2 *Water Tester*— Dip strip method of analysis (see Test Method F488).

11.2.2.1 Using either the TGE Total Count Water Tester, or the SPC Sampler, remove the internal paddle from the water tester case (Fig. 3), and dip it into the water sample previously collected in the plastic bag. Hold the tester paddle in the water sample for 20 to 30 s, remove it, shake off the excess sample, and replace it tightly in the original sampler outer case. A1–mL sample is automatically filtered.

11.2.2.2 With the filter side down, place the sample in the incubator at 28 ± 2°C for 48 h.

11.3 *Counting Colonies*—Follow Test Method A, 8.2.1 and 8.2.2.

12. Results

12.1 Express results as the unit number of colonies counted per 100-mL volume of water tested. If the result indicates a count of >200 cfu (colony forming units), record the result as TNTC (too numerous to count).

13. Keywords

13.1 contamination; microbiological contamination; microbiological testing; semiconductor processing; water; water distribution system

ASTM International takes no position respecting the validity of any patent rights asserted in connection with any item mentioned in this standard. Users of this standard are expressly advised that determination of the validity of any such patent rights, and the risk of infringement of such rights, are entirely their own responsibility.

This standard is subject to revision at any time by the responsible technical committee and must be reviewed every five years and if not revised, either reapproved or withdrawn. Your comments are invited either for revision of this standard or for additional standards and should be addressed to ASTM International Headquarters. Your comments will receive careful consideration at a meeting of the responsible technical committee, which you may attend. If you feel that your comments have not received a fair hearing you should make your views known to the ASTM Committee on Standards, at the address shown below.

This standard is copyrighted by ASTM International, 100 Barr Harbor Drive, PO Box C700, West Conshohocken, PA 19428-2959, United States. Individual reprints (single or multiple copies) of this standard may be obtained by contacting ASTM at the above address or at 610-832-9585 (phone), 610-832-9555 (fax), or service@astm.org (e-mail); or through the ASTM website (www.astm.org). Permission rights to photocopy the standard may also be secured from the Copyright Clearance Center, 222 Rosewood Drive, Danvers, MA 01923, Tel: (978) 646-2600; http://www.copyright.com/