This international standard was developed in accordance with internationally recognized principles on standardization established in the Decision on Principles for the Development of International Standards, Guides and Recommendations issued by the World Trade Organization Technical Barriers to Trade (TBT) Committee.

Designation: F1689 – 05 (Reapproved 2020)

Standard Test Method for Determining the Insulation Resistance of a Membrane Switch[1]

This standard is issued under the fixed designation F1689; the number immediately following the designation indicates the year of original adoption or, in the case of revision, the year of last revision. A number in parentheses indicates the year of last reapproval. A superscript epsilon (ε) indicates an editorial change since the last revision or reapproval.

1. Scope

1.1 This test method covers the determination of the insulation resistance of a membrane switch.

1.2 *This standard does not purport to address all of the safety concerns, if any, associated with its use. It is the responsibility of the user of this standard to establish appropriate safety, health, and environmental practices and determine the applicability of regulatory limitations prior to use.*

1.3 *This international standard was developed in accordance with internationally recognized principles on standardization established in the Decision on Principles for the Development of International Standards, Guides and Recommendations issued by the World Trade Organization Technical Barriers to Trade (TBT) Committee.*

2. Terminology

2.1 *Definitions:*

2.1.1 *insulation resistance*—the electrical resistance between test points.

2.1.2 *leakage current*—current flow through the insulation between test points.

2.1.3 *membrane switch*—a momentary switching device in which at least one contact is on, or made of, a flexible substrate.

2.1.4 *test points*—two preselected conductive points in a circuit loop, possibly including a switch.

3. Significance and Use

3.1 Insulation resistance is useful for design verification, quality control of materials, and workmanship.

3.2 Low insulation resistance can cause high leakage currents.

3.3 High leakage currents can lead to deterioration of the insulation or false triggering of the associated input device, or both.

3.4 Specific areas of testing are, but not limited to:

3.4.1 Conductor/dielectric/conductor crossing point.

3.4.2 Close proximity of conductors, and

3.4.3 Any other conductive surface such as shielding or metal backing panel.

3.5 Insulation resistance measurement may be destructive and units that have been tested should be considered unreliable for future use.

4. Interferences

4.1 The following parameters may affect the result of this test:

4.1.1 Humidity,

4.1.2 Contamination,

4.1.3 Barometric pressure, and

4.1.4 Temperature.

5. Apparatus

5.1 *Electric Device,* suitable to provide a constant preselected dc voltage and suitable electronic monitoring device to measure very small current levels (micro-ampere range), or

5.2 *Resistance Measuring Device,* such as a megohm-meter, or equivalent that can provide a specified voltage. (This would replace 5.1.)

6. Procedure—Voltage Source Method (Fig. 1)

6.1 *Pretest Setup:*

6.1.1 Connect test points of the switch assembly to the voltage source.

6.1.2 Connect leakage current measuring device in series with the voltage source.

6.2 *In-Process Test:*

6.2.1 Adjust voltage source to 100 VDC ± 10 % or as specified.

6.2.2 Dwell for 60 s.

6.2.3 Record leakage current.

7. Procedure—Megohm Method (Fig. 2)

7.1 *Pretest Setup:*

7.1.1 Connect test points of the switch assembly to the megohm-meter.

[1] This test method is under the jurisdiction of ASTM Committee F01 on Electronics and is the direct responsibility of Subcommittee F01.18 on Printed Electronics.

Current edition approved Sept. 1, 2020. Published September 2020. Originally approved in 1996. Last previous edition approved in 2012 as F1689–05(2012). DOI: 10.1520/F1689-05R20.

Copyright © ASTM International, 100 Barr Harbor Drive, PO Box C700, West Conshohocken, PA 19428-2959. United States

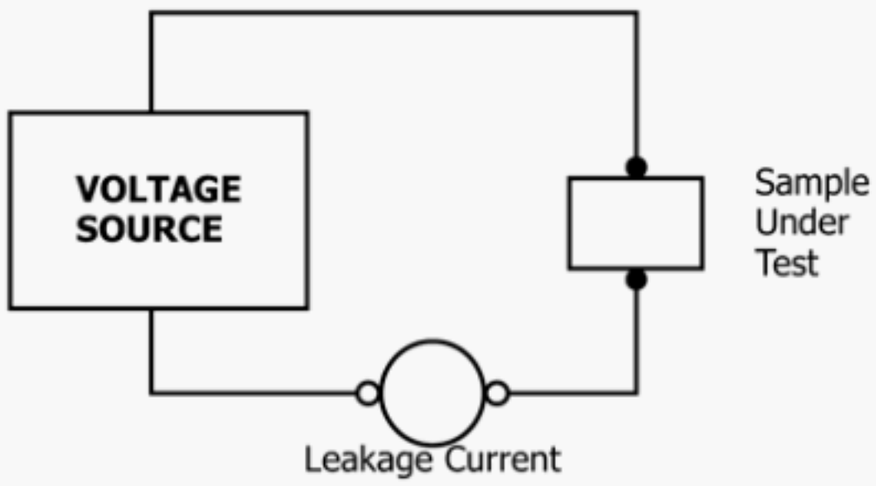

FIG. 1 Test Setup Option

FIG. 2 Test Setup Option

7.2 *In-Process Test:*

7.2.1 Adjust megohm-meter to 100 VDC ± 10 % or as specified.

7.2.2 Dwell for 60 s.

7.2.3 Record insulation resistance.

8. Calculations—Voltage Source Method Only

8.1 Calculate the insulation resistance as follows:

Insulation Resistance = Applied Voltage/Leakage Current

9. Report

9.1 Report the following information:

9.1.1 Temperature,

9.1.2 Humidity,

9.1.3 Barometric pressure,

9.1.4 Applied voltage,

9.1.5 Duration of applied voltage,

9.1.6 Leakage Current—Voltage Source Method only,

9.1.7 Insulation resistance,

9.1.8 Part number or description of switch, or both,

9.1.9 Description of test points,

9.1.10 Date of test, and

9.1.11 Description of all equipment used (including sensitivity range).

10. Precision and Bias

10.1 The precision and bias of this test method are under investigation.

11. Keywords

11.1 insulation resistance; leakage current; membrane switch

ASTM International takes no position respecting the validity of any patent rights asserted in connection with any item mentioned in this standard. Users of this standard are expressly advised that determination of the validity of any such patent rights, and the risk of infringement of such rights, are entirely their own responsibility.

This standard is subject to revision at any time by the responsible technical committee and must be reviewed every five years and if not revised, either reapproved or withdrawn. Your comments are invited either for revision of this standard or for additional standards and should be addressed to ASTM International Headquarters. Your comments will receive careful consideration at a meeting of the responsible technical committee, which you may attend. If you feel that your comments have not received a fair hearing you should make your views known to the ASTM Committee on Standards, at the address shown below.

This standard is copyrighted by ASTM International, 100 Barr Harbor Drive, PO Box C700, West Conshohocken, PA 19428-2959, United States. Individual reprints (single or multiple copies) of this standard may be obtained by contacting ASTM at the above address or at 610-832-9585 (phone), 610-832-9555 (fax), or service@astm.org (e-mail); or through the ASTM website (www.astm.org). Permission rights to photocopy the standard may also be secured from the Copyright Clearance Center, 222 Rosewood Drive, Danvers, MA 01923, Tel: (978) 646-2600; http://www.copyright.com/