This international standard was developed in accordance with internationally recognized principles on standardization established in the Decision on Principles for the Development of International Standards, Guides and Recommendations issued by the World Trade Organization Technical Barriers to Trade (TBT) Committee.

Designation: F433 – 02 (Reapproved 2020)

Standard Practice for Evaluating Thermal Conductivity of Gasket Materials[1]

This standard is issued under the fixed designation F433; the number immediately following the designation indicates the year of original adoption or, in the case of revision, the year of last revision. A number in parentheses indicates the year of last reapproval. A superscript epsilon (ε) indicates an editorial change since the last revision or reapproval.

1. Scope

1.1 This practice covers a means of measuring the amount of heat transfer quantitatively through a material or system.

1.2 This practice is similar to the Heat Flow Meter System of Test Method C518, but modified to accommodate small test samples of higher thermal conductance.

1.3 The values stated in SI units are to be regarded as the standard. The values given in parentheses are for information only.

1.4 *This standard does not purport to address all of the safety concerns, if any, associated with its use. It is the responsibility of the user of this standard to establish appropriate safety, health, and environmental practices and determine the applicability of regulatory limitations prior to use.*

1.5 *This international standard was developed in accordance with internationally recognized principles on standardization established in the Decision on Principles for the Development of International Standards, Guides and Recommendations issued by the World Trade Organization Technical Barriers to Trade (TBT) Committee.*

2. Referenced Documents

2.1 *ASTM Standards:*[2]

C518 Test Method for Steady-State Thermal Transmission Properties by Means of the Heat Flow Meter Apparatus

D2214 Test Method for Estimating the Thermal Conductivity of Leather with the Cenco-Fitch Apparatus (Withdrawn 2008)[3]

F104 Classification System for Nonmetallic Gasket Materials

3. Terminology

3.1 *Definitions:*

3.1.1 *thermal conductivity, k, of a solid material*—the time rate of steady heat flow, watts (or Btu/h), through a unit area, m^2 (or ft^2), per unit temperature gradient in the direction perpendicular to an isothermal surface °C/m (or °F/in.). The *k*-factor is expressed W/m·K (Btu·in./h·ft^2 ·°F).

3.2 *Symbols:*

k	=	thermal conductivity, W/m·K (Btu·in./h·ft^2·°F)
C	=	thermal conductance, W/m^2·K (Btu/h·ft^2·°F)
Δx	=	sample thickness, mm (in.)
A	=	sample cross-sectional area, m^2 (ft^2)
q	=	heat flow, W (Btu/h)
φ	=	heat flow transducer output, mV
N	=	heat flow transducer calibration constant, W/m^2·mV (Btu/h·ft^2·mV)
$N\varphi$	=	heat flux, W/m^2 (Btu/h·ft^2)
ΔT	=	temperature difference, °C (°F) or mV
T_1	=	temperature of lower sample surface,°C (°F) or mV
T_2	=	temperature of upper sample surface, °C (°F) or mV
T_h	=	temperature of HFT surface facing sample,° C (°F) or mV
T_c	=	temperature of upper heater surface facing sample, °C (°F) or mV
T	=	temperature, °C (°F)
δ	=	total temperature drop across interfaces between sample and adjacent surfaces, °C (°F) or mV
ρ	=	coefficient of thermal resistance at interfaces, m^2·K/W (h·ft^2·°F/Btu)
α	=	correction constant
subscript s	=	unknown sample
subscript r	=	known calibration sample

4. Summary of Practice

4.1 The sample and the heat flow transducer (HFT) are sandwiched between two controlled heater plates. The lower heater is set at a higher temperature than the upper plate to produce a flow of heat through the sample. The differential of these two temperatures, ΔT, sensed by thermocouples, is amplified along with the electrical output, φ, of the HFT and is directly proportional to the heat flow through the sample, expressed as W/m^2 (Btu/h·ft^2). See Appendix for further information. This recommended practice can be used for

[1] This practice is under the jurisdiction of ASTM Committee F03 on Gaskets and is the direct responsibility of Subcommittee F03.10 on Composite Gaskets.

Current edition approved Jan. 1, 2020. Published January 2020. Originally approved in 1964. Last previous edition approved in 2014 as F433 – 02 (2014)$^{\varepsilon 1}$. DOI: 10.1520/F0433-02R20.

[2] For referenced ASTM standards, visit the ASTM website, www.astm.org, or contact ASTM Customer Service at service@astm.org. For *Annual Book of ASTM Standards* volume information, refer to the standard's Document Summary page on the ASTM website.

[3] The last approved version of this historical standard is referenced on www.astm.org.

Copyright © ASTM International, 100 Barr Harbor Drive, PO Box C700, West Conshohocken, PA 19428-2959. United States

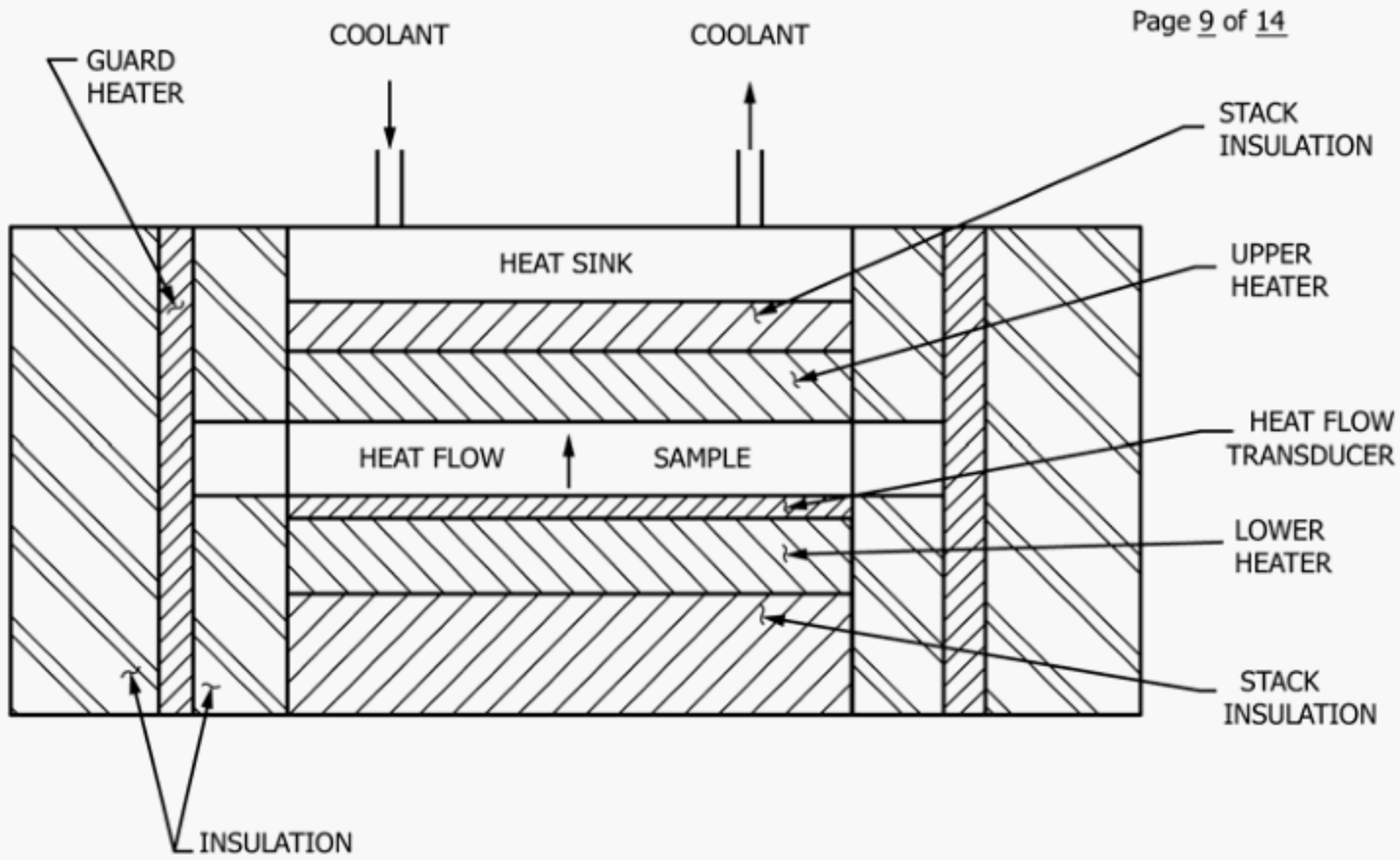

FIG. 1 Heat Flow Meter Assembly With Water-Cooled Heat Sink

measuring heat transfer at a hot side temperature up to 200°C (392°F). See Figs. 1-5.

5. Significance and Use

5.1 This practice is designed to compare related materials under controlled conditions and their ability to maintain a minimum amount of thermal conductance. Test results should be correlated with field results in order to predict heat transfer properties in particular applications.

5.2 This practice may be used as a routine test when agreed upon by the user and the producer.

6. Apparatus

6.1 *Heat Flow Transducer* (HFT), with controlled heater plates, thermocouples, and an analog computer module.[4]

7. Test Specimen

7.1 The sample size shall be a 50.8-mm (2-in.) diameter disk ±0.25 mm (±0.010 in.) from 2.29 to 12.7 mm (0.090 to 0.500 in.) thick.

8. Conditioning

8.1 Condition the cut specimens in accordance with their classification, as required in Classification F104.

9. Procedure

9.1 Test temperatures are suggested from 100 to 175°C (212 to 347°F) or whatever is agreed upon between the producer and user. (The guard heater is usually set at or near the average sample temperature between the lower and upper heater plates.)

[4] The sole source of supply of the apparatus known to the committee at this time is Holometrix, Inc., 25 Wiggins Avenue, Bedford, MA 01730–2323. If you are aware of alternative suppliers, please provide this information to ASTM Headquarters. Your comments will receive careful consideration at a meeting of the responsible technical committee, which you may attend.

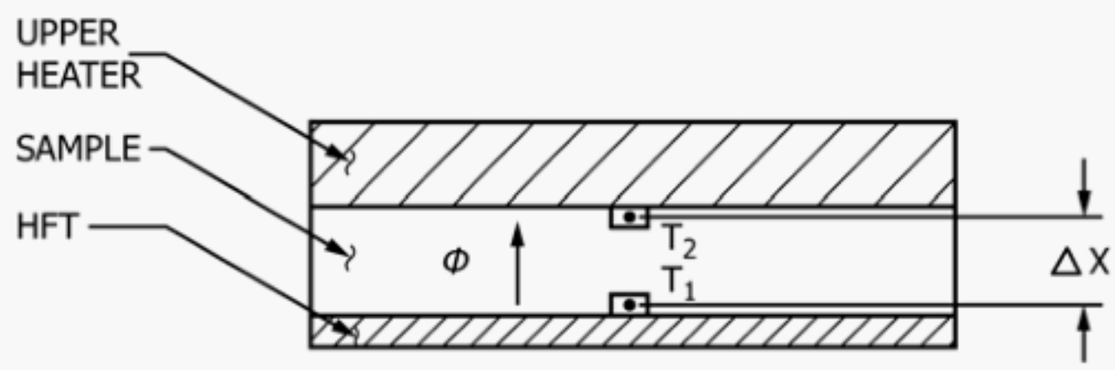

FIG. 2 HFT Electrical Output and Heat Flow Section With Temperature Sensors

9.1.1 Release the compressive load, pull out the tray, and load the sample. Care must be maintained to ensure that the tray compartment is free of any foreign matter. Clean as required.

9.1.2 Push the tray back into the chamber with a ball and plunger locking the tray into position.

9.1.3 Close the test section door and switch the air control to "stack clamped." The sample holder is now raised automatically until the sample is clamped in place between the upper and lower heaters. The compressive load can be adjusted by controlling the air pressure at the rear of the unit. A pressure of 0.345 MPa (50 psi) is the recommended maximum and should be specified by both the producer and user to ensure repeatable results.

9.1.4 Allow from 1 to 2 h for the reading to stabilize. Read the sample thermal conductance and temperature directly from digital meters on the front panel. The instrument has stabilized when the temperature indicated changes by no more than ±5 %/h and the conductance indicated changes no more than ±2 %/h.

10. Report

10.1 The report shall include the following:

10.1.1 Sample conditioning procedure,

10.1.2 Ambient temperature,

10.1.3 Sample hot side temperature, T_h,

10.1.4 Sample cold side temperature, T_c,

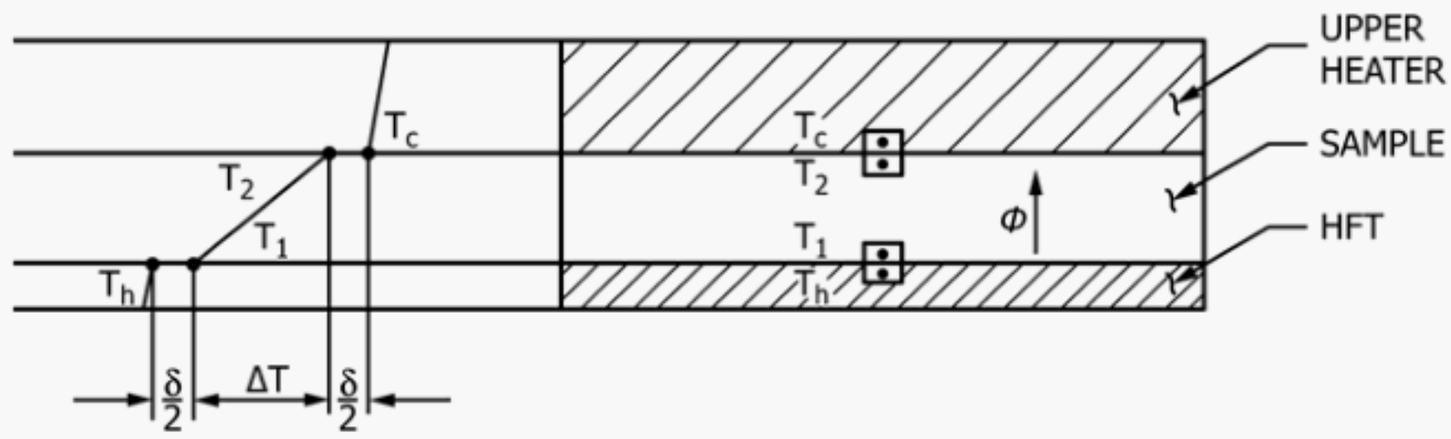

FIG. 3 Location of Thermocouples to Produce a Temperature Gradient Through the Test Sample

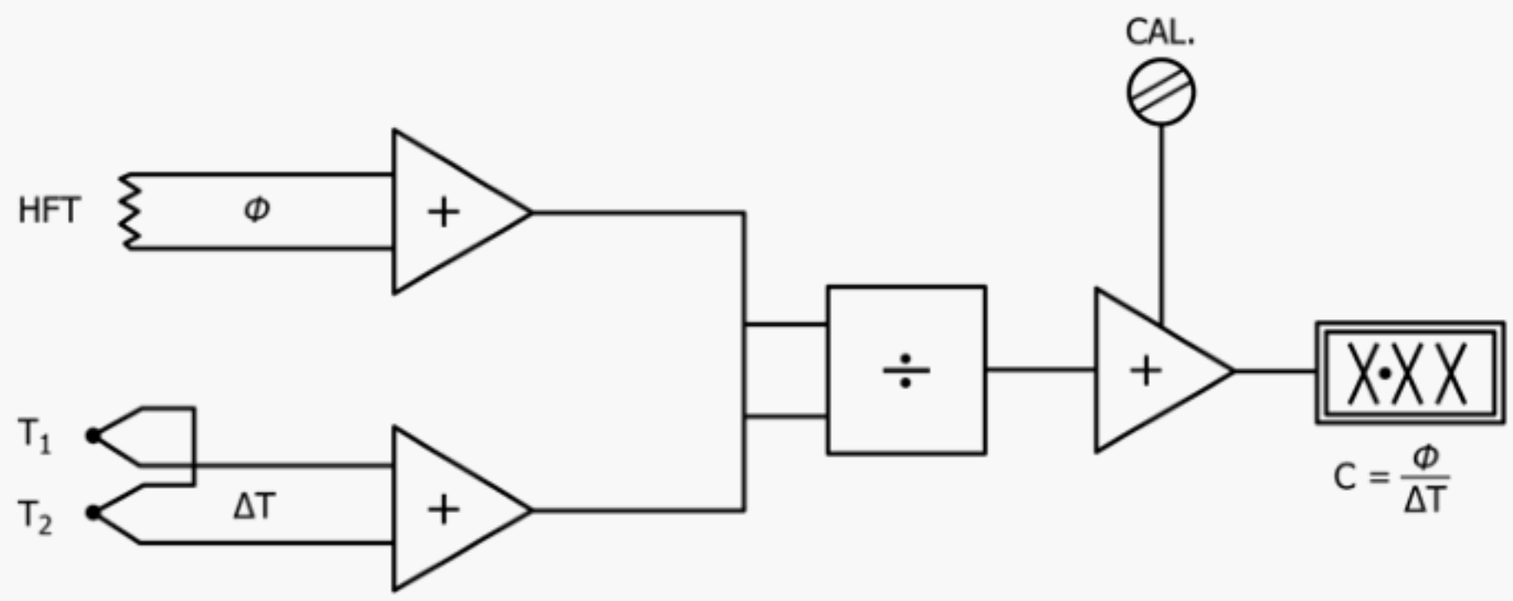

FIG. 4 The Hot and Cold Sample Surface Temperature Differential Amplified with the HFT Output, Divided Electronically, and Displayed Digitally

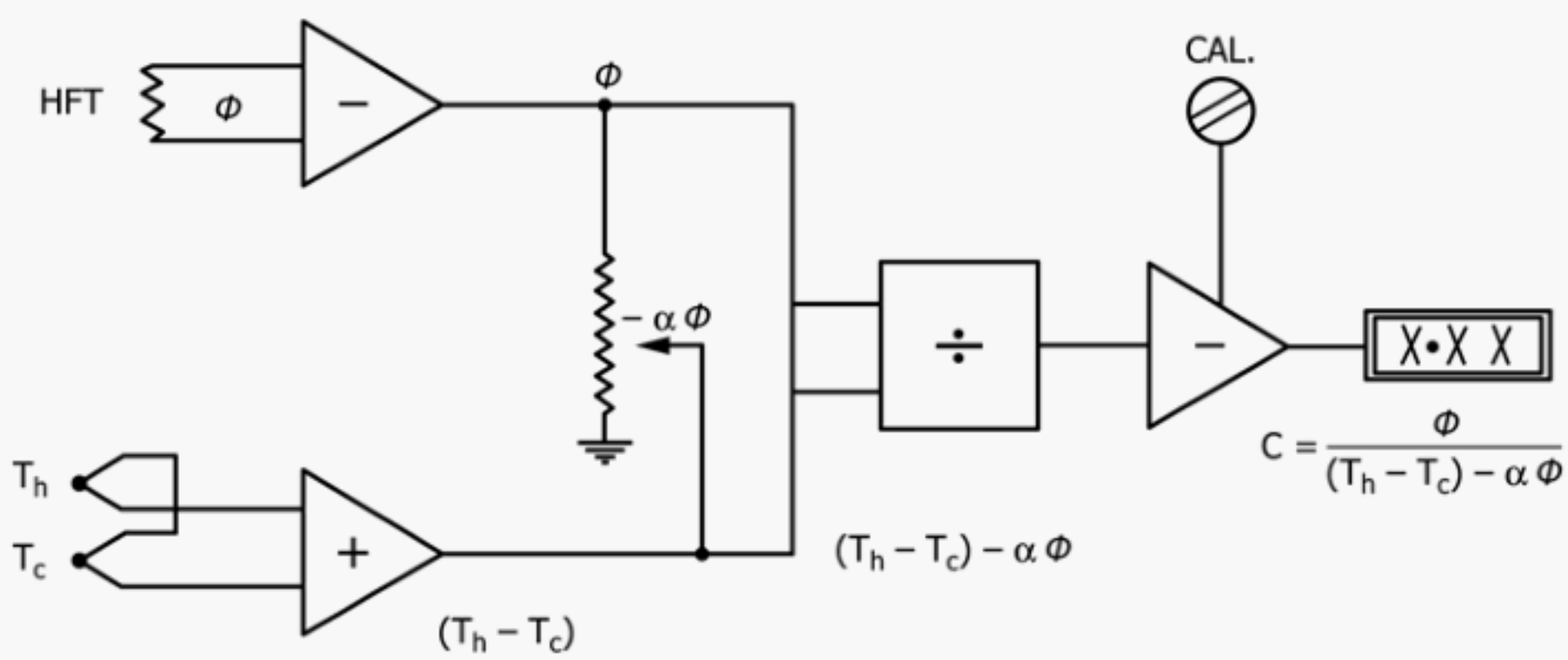

FIG. 5 Clarification of Fig. 4 Showing the Calibration to Obtain the Correction Constant Correct Value Before Testing an Unknown Sample

10.1.5 Sample temperature drop, $T_h - T_c$,
10.1.6 Average sample temperature, $(T_h + T_c)/2$,
10.1.7 Sample thickness, Δx,
10.1.8 Thermal conductivity, k, and
10.1.9 Compressive load.

11. Precision and Bias

11.1 The precision of the practice is expected to be within ±5 %.

12. Keywords

12.1 comparative thermal conductance; heat flow; thermal conductance

APPENDIXES

(Nonmandatory Information)

X1. GENERAL INFORMATION

X1.1 If a test specimen in the form of a disk is held between two flat surfaces, each controlled at a different temperature, a flow of heat passes through the sample from the hot to the cold surface. The thermal conductivity is determined by the following equation:

$$k = \frac{q}{A}\,\frac{\Delta x}{\Delta T}\,[W/m\cdot K] \text{ or } [Btu\cdot in./h\cdot ft^{2}\cdot {}^{\circ}F] \qquad (X1.1)$$

where:

q = heat flow through the sample, watt (Btu/h),
A = cross-sectional area of the sample, m^2 (ft^2),
Δx = sample thickness, mm (in.), and
ΔT = temperature difference across the sample, °C (°F).

X1.2 The heat flow per unit area is measured with a heat flow transducer, a sensitive device producing an electrical output that is directly proportional to the heat flux, q/A. If the output of the heat flow transducer (HFT) is called φ than the k -factor can be calculated from:

$$k = N\varphi\,\frac{\Delta x}{\Delta T} \qquad (X1.2)$$

X1.3 In this equation φ, ΔT, and Δx can be measured by simple means, while the calibration constant, N, can be determined by testing a sample of known thermal conductivity.

X2. CALCULATIONS

X2.1 After thermal equilibrium has been established, the various sensors may be read and recorded. Data reduction is dependent upon the positions of the thermocouples for measuring the sample ΔT, as follows:

X2.1.1 If thermocouples are installed in the sample surface then:

$$\Delta T = T_1 - T_2\,(mV) \qquad (X2.1)$$

NOTE X2.1—The sample thickness must be adjusted to account for the thermocouples being slightly below the surface, see Fig. 2.

X2.1.2 A calibration run must first be made using a calibration standard of known thermal conductivity, k_r.[5] This procedure is identical to the procedure for the unknown sample as follows:

X2.1.2.1 k-factor, unknown sample:

$$k_s = N\varphi_s\,\frac{\Delta x_s}{\Delta T_s} \qquad (X2.2)$$

X2.1.2.2 k-factor, known sample:

$$k_r = N\varphi_r\,\frac{\Delta x_r}{\Delta T_r} \qquad (X2.3)$$

X2.1.2.3 Combining the unknown and known samples:

$$k_s = k_r\,\frac{\varphi_s}{\varphi_r}\,\frac{\Delta x_s}{\Delta x_r}\,\frac{\Delta T_r}{\Delta T_s} \qquad (X2.4)$$

X2.1.3 If thermocouples are located permanently in the surface adjacent to the sample, then, in accordance with Fig. 3, the ΔT obtained by subtracting T_h and T_c is *not* equal to the ΔT across the sample itself due to contact resistance. (A correction factor can be obtained from the calibration test data.)

X2.1.4 The calibration sample must have a set of thermocouples installed in grooves in the upper and lower surfaces. During calibration the following results are obtained:

$$k_r = N\varphi_r\,\frac{\Delta x_r}{\Delta T_r} \qquad (X2.5)$$

where:

$$\Delta T_r = T_1 - T_2 \qquad (X2.6)$$

X2.1.5 From the various thermocouple readings we can calculate the total interfacial temperature drop as follows:

$$\delta = (T_h - T_c)_r - \Delta T_r \qquad (X2.7)$$

The interfacial temperature drop, δ, is proportional to the heat flux, $N\varphi_r$ as follows:

$$\delta = \rho N\varphi_r \qquad (X2.8)$$

where ρ is a proportionality constant and depends mostly on the surface conditions and on the applied pressure on the test stack. It is assumed that ρ remains essentiality constant from test to test so long as the applied pressure remains the same. The contact coefficient ρ is thus obtained from Eq X2.6.

$$\rho = \frac{\delta}{N\varphi_r} \qquad (X2.9)$$

X2.1.6 When the unknown sample is tested, the following data must be recorded: φ_s, T_h, T_c, and Δx_s. The corrected temperature drop across the sample is as follows:

$$\Delta T_s = (T_h - T_c)_s - \rho N\varphi_s \qquad (X2.10)$$

Substituting Eq X2.9 as follows:

$$\Delta T_s = (T_h - T_c)_s - \delta\,\frac{\varphi_s}{\varphi_r} \qquad (X2.11)$$

The thermal conductivity of the unknown sample is as follows:

[5] Borosilicate No. 7740 has been found to be a suitable reference standard material. This can be purchased with the test equipment. The reference standard used should be documented in the test report.

$$k_s = N\varphi_s \frac{\Delta x_s}{\Delta T_s} \quad (X2.12)$$

Combining Eq X2.3 and Eq X2.10 we have the following:

$$k_s = k_r \frac{\varphi_s}{\varphi_r} \frac{\Delta x_s}{\Delta x_r} \frac{\Delta T_r}{\Delta T_s} \quad (X2.13)$$

where:

$$\Delta T_r = T_1 - T_2, \quad (X2.14)$$

and

$$\Delta T_s = (T_h - T_c)_s - \delta \frac{\varphi_s}{\varphi_r} \quad (X2.15)$$

in which:

$$\delta = (T_h - T_c)_r - \Delta T_r \quad (X2.16)$$

X2.1.7 Substitution of Eq X2.4, Eq X2.9, and Eq X2.5 we have the following:

$$k_s = k_r \frac{\Delta x_s}{\Delta x_r} \frac{1}{1 - \left(\frac{T_h - T_c}{T_1 - T_2}\right) r + \frac{\varphi_r}{\varphi_s} \frac{(T_h - T_c)_s}{(T_1 - T_2)_r}} \quad (X2.17)$$

NOTE X2.2—If there is no contact resistance, δ, Eq X2.4 goes to zero and the Eq X2.12 assumes the same form as Eq X2.2. Also, note that the calibration data, subscript *r*, needs to be obtained only once at each temperature level. Thermocouple readings may be kept in mV and need not be converted to °C (°F) except for determining the average sample temperature.)

X2.1.8 If an analog calculator is used to obtain the unknown sample *k*-factor and thermocouples are installed in the sample surface: The ΔT signal is then obtained by connecting the thermocouples differentially; the HFT and ΔT signals are amplified and divided electronically with the results shown on a digital volt meter (Fig. 4). The gain of the final stage amplifier can be varied to produce an output voltage equal to the thermal conductance of the sample in any desired set of units. In other words, if the thermal conductance, $(C = k/\Delta x)$, of the sample is 15 Btu/h·ft^2 ·°F, the output voltage of the analog calculator is 15 V. The *k*-factor is obtained by multiplying the displayed value by the sample thickness, Δx, measured separately.

X2.1.9 However, the instrument first must be calibrated by testing a reference sample of known thermal conductivity. After thermal equilibrium has been established in the test stack, the *C*-factor is determined by taking $k/\Delta x$ and the final gain is adjusted until the displayed value equals *C*.

X2.1.10 If thermocouples are located permanently in the surface adjacent to the sample, a correction must be made in the determination of the sample ΔT to account for interfacial resistance. The differential of the two permanent thermocouples, $(T_h - T_c)$, must be reduced by a correction factor which is proportional to the heat flow transducer output, φ (see Eq X2.8). The temperature drop across the sample is as follows:

$$\Delta T = (T_h - T_c) - \alpha\varphi \quad (X2.18)$$

The analog calculator can be used to compute the *C*-factor of the sample (see Fig. 5):

$$C = \frac{\varphi}{(T_h - T_c) - \alpha\varphi} \quad (X2.19)$$

and the gain of the final stage amplifier can be varied to yield the correct value on the digital display.

X2.1.11 A calibration run must be made first to obtain the correct value for α and to adjust the final gain for the proper *C*-factor. The reference sample must have thermocouples installed in grooves in the surface. After these thermocouples have been connected to the ΔT input of the calculator and the correction constant α has been adjusted to zero (see Fig. 5). The final gain must be adjusted to obtain the correct *C*-factor of the reference sample. Next, the permanent thermocouples are connected to the ΔT channel of the calculator and the correction constant α adjusted until the displayed *C*-value is the same as before. Subsequent tests on unknown samples without thermocouples yield the correct *C*-factor directly on the digital display. Multiplying these *C*-factors by the corresponding sample thickness gives the *k* for each case.

X3. PROPOSAL FOR INFORMATION PURPOSES ONLY

X3.1 A method and apparatus has been established for use as a screening tool which can relate to the relative orders of thermal conductivity. It is not intended for use in writing specifications, as it cannot provide reliable results for the thermal conductivity of a material.

X3.2 The device referred to is described as a heat-insulated copper vessel with a heavy copper plate base, and a receiver containing a mating copper plug which is also insulated. While the upper plate or vessel and test sample is at a constant temperature, heat flow through the sample is produced by measuring the slowly changing temperature increase of the receiver with thermocouples. The rate of flow of heat through the specimen is proportional to the area and the ΔT of the faces of the specimen, and inversely proportional to the thickness. This fixture is recommended for use at 100°C (212°F) hot-side temperature; however, testing at 150°C (302°F) can be done with a non-petroleum type heat transfer fluid[6] when the bath temperature is controlled by use of a thermoregulator and electronic relay in conjunction with the immersion heater. Included with this device is a copper vessel source, heat-insulated on the sides, a receiver with an insulated copper plug face ground, a galvanometer, an immersion heater, a weight, 5 kg (11 lb), a micrometer, a stop watch, an electronic relay, and a thermoregulator.

X3.3 The test specimen can be a 76.2 ± 0.76-mm (3 ± 0.030-in.) diameter disk from 2.29 to 12.7 mm (0.090 to 0.500 in.) thick housed or press-fitted into a carrier 152.4 ± 0.76-mm

[6] Ucon oil can be obtained from Dow Chemical under Product No. 50-HB5100-XY23.

(6 ± 0.030-in.) square of a similar construction and from 1.52 to 2.29 mm (0.060 to 0.090 in.) less in thickness than the test specimen itself. This carrier is to provide resistance to heat transfer edge loss from the specimen. The specimen is prepared similar to the gaskets under consideration.

X3.4 The following procedure has been found to work quite well:

X3.4.1 Connect one end of a constantan wire to the constantan terminal of the source and the other end to the constantan terminal of the receiver. Join one end of a copper wire to the copper binding post of the receiver and the other end to the positive binding post of the galvanometer. Connect a second copper wire to the copper binding post of the source and the other end to the negative binding post of the galvanometer.

X3.4.2 Fill the vessel with distilled water (or nonpetroleum oil) and bring to a slow boil (or steady-state) with the use of a voltage transformer (or a thermoregulator/electronic relay conjunction) for controlling the immersion heater. This should be done with the vessel resting on the test specimen with the 5-kg (11-lb) collar atop the vessel.

X3.4.3 Steady-state is realized when the galvanometer deflections are steady.

X3.4.4 When a steady-state is reached (approximately 20 min) place the vessel with the specimen in place atop the receiver and start the timing device.

NOTE X3.1—It is important that the sample and vessel be transferred as rapidly as possible and that the sample's position remain unchanged with respect to the vessel while transferring.

X3.4.5 The maximum deflection obtained in X3.4.4 is the zero reading.

X3.4.6 Measure galvanometer deflection, d, at regular 3-min intervals until a total of 10 readings have been taken.

X3.4.7 If the evaporation of the distilled water takes place before 10 readings are taken, add boiling water as required.

X3.4.8 When a steady-state is reached (zero galvanometer deflection), with the vessel and specimen together, place them atop the receiver along with a 5-kg (11-lb) weight around the vessel collar. This should be at room temperature. Record galvanometer deflections, d, at regular intervals, depending on the rate of heat conduction. Keep the liquid at a constant temperature. It can be shown mathematically that:

$$t = -2.303 \frac{LMC}{kA} (\log d - \log d_o) \quad \text{(X3.1)}$$

Therefore, plotting t as ordinate against log d as abscissa should equal a straight line since all other quantities including log d_o are constant. The slope, m, of t plotted against log d is therefore:

$$m = -2.303 \frac{LMC}{kA} \quad \text{(X3.2)}$$

Inserting the value of the slope, m, obtained by calculation, and multiplying by 60 s, calculate the value of k, in W/m·K (Btu·in./ft^2 ·h·°F) as follows:

$$k = -2.303 \frac{LMC}{m' A} \quad \text{(X3.3)}$$

where:

t = time, min,
L = thickness of specimen, m,
M = mass of copper block, kg,
C = specific heat of copper block, 389.1 J/kg·K,
A = area of copper block, m^2,
k = conductivity constant, and,
d = deflections (d_o = deflection at zero time).

Reference: 1) Test Method D2214.

ASTM International takes no position respecting the validity of any patent rights asserted in connection with any item mentioned in this standard. Users of this standard are expressly advised that determination of the validity of any such patent rights, and the risk of infringement of such rights, are entirely their own responsibility.

This standard is subject to revision at any time by the responsible technical committee and must be reviewed every five years and if not revised, either reapproved or withdrawn. Your comments are invited either for revision of this standard or for additional standards and should be addressed to ASTM International Headquarters. Your comments will receive careful consideration at a meeting of the responsible technical committee, which you may attend. If you feel that your comments have not received a fair hearing you should make your views known to the ASTM Committee on Standards, at the address shown below.

This standard is copyrighted by ASTM International, 100 Barr Harbor Drive, PO Box C700, West Conshohocken, PA 19428-2959, United States. Individual reprints (single or multiple copies) of this standard may be obtained by contacting ASTM at the above address or at 610-832-9585 (phone), 610-832-9555 (fax), or service@astm.org (e-mail); or through the ASTM website (www.astm.org). Permission rights to photocopy the standard may also be secured from the Copyright Clearance Center, 222 Rosewood Drive, Danvers, MA 01923, Tel: (978) 646-2600; http://www.copyright.com/