This international standard was developed in accordance with internationally recognized principles on standardization established in the Decision on Principles for the Development of International Standards, Guides and Recommendations issued by the World Trade Organization Technical Barriers to Trade (TBT) Committee.

Designation: F585 – 16 (Reapproved 2021)

# Standard Guide for Insertion of Flexible Polyethylene Pipe Into Existing Sewers[1]

This standard is issued under the fixed designation F585; the number immediately following the designation indicates the year of original adoption or, in the case of revision, the year of last revision. A number in parentheses indicates the year of last reapproval. A superscript epsilon (ε) indicates an editorial change since the last revision or reapproval.

*This standard has been approved for use by agencies of the U.S. Department of Defense.*

## 1. Scope*

1.1 This guide describes design and selection considerations and installation procedures for the rehabilitation of sanitary and storm sewers by the insertion of solid wall or profile wall or corrugated polyethylene pipe into an existing pipe and along its existing line and grade. The procedures in this guide are intended to minimize traffic disruption, surface damage, surface restoration and interruption of service.

1.2 The polyethylene piping product manufacturer should be consulted to determine the polyethylene piping product's suitability for insertion renewal as described in this guide.

1.3 The values stated in inch-pound units are to be regarded as standard. The values given in parentheses are mathematical conversions to SI units that are provided for information only and are not considered standard.

1.4 *This standard does not purport to address all of the safety concerns, if any, associated with its use. It is the responsibility of the user of this standard to establish appropriate safety, health, and environmental practices and determine the applicability of regulatory limitations prior to use.* See 6.1, 7.1, and 8.1 for additional safety precautions.

1.5 *This international standard was developed in accordance with internationally recognized principles on standardization established in the Decision on Principles for the Development of International Standards, Guides and Recommendations issued by the World Trade Organization Technical Barriers to Trade (TBT) Committee.*

## 2. Referenced Documents

2.1 *ASTM Standards:*[2]

F412 Terminology Relating to Plastic Piping Systems

F1417 Practice for Installation Acceptance of Plastic Nonpressure Sewer Lines Using Low-Pressure Air

F1804 Practice for Determining Allowable Tensile Load for Polyethylene (PE) Gas Pipe During Pull-In Installation

F2620 Practice for Heat Fusion Joining of Polyethylene Pipe and Fittings

2.2 *Other Documents:*[3]

PPI Material Handling Guide

## 3. Terminology

3.1 *Definitions*—Definitions are in accordance with Terminology F412, unless otherwise specified.

## 4. Significance and Use

4.1 The procedures described in this guide are intended as a design and review aid for use by the design engineer in conjunction with manufacturer's recommendations for installing a polyethylene pipe using the insertion method.

## 5. Design and Selection Considerations

5.1 *General Guidelines:*

5.1.1 *Host Pipe Condition Assessment*—Prior to the selection of polyethylene pipe size and installation procedure, measures should be taken to determine in detail the condition of the host (original) sewer piping. A detailed examination should determine if the host sewer piping is structurally sufficient, and that any joint offsets or other host pipe defects will permit polyethylene pipe insertion.

5.1.2 The presence of obstructions should be determined (see 6.3). Protrusions of lateral or service piping into the host sewer pipe, root growths, sedimentation, mineral deposits, or any combination of such obstructions, may require remedial work prior to inserting the polyethylene pipe.

5.1.3 To ensure against interference during insertion, the minimum annular clearance between the polyethylene pipe OD and the host pipe ID should be 10 % of the host pipe ID or 2 in. (50 mm) whichever is less. Greater annular clearance is acceptable. Outside diameter information should be obtained from the polyethylene pipe manufacturer.

5.1.4 The number of insertion excavations should be kept to a minimum and should coincide with areas where problems have been detected in the existing sewer (see Section 7).

[1] This guide is under the jurisdiction of ASTM Committee F17 on Plastic Piping Systems and is the direct responsibility of Subcommittee F17.62 on Sewer.

Current edition approved April 1, 2021. Published April 2021. Originally approved in 1978. Last previous edition approved in 2016 as F585 – 16. DOI: 10.1520/F0585-16R21.

[2] For referenced ASTM standards, visit the ASTM website, www.astm.org, or contact ASTM Customer Service at service@astm.org. For *Annual Book of ASTM Standards* volume information, refer to the standard's Document Summary page on the ASTM website.

[3] Available from Plastics Pipe Institute (PPI), 105 Decker Court, Suite 825, Irving, TX 75062, http://www.plasticpipe.org.

***A Summary of Changes section appears at the end of this standard**

Copyright © ASTM International, 100 Barr Harbor Drive, PO Box C700, West Conshohocken, PA 19428-2959. United States

5.1.5 Solid wall or profile wall or corrugated polyethylene pipe may be assembled at the time of insertion using heat fusion in accordance with Practice F2620, integral bell and spigot joints, or mechanical connections as appropriate for the polyethylene piping product.

5.1.6 In all cases, the hydraulic capacity of the pipeline should be assessed by an engineer to insure the reduction in flow area from an inserted pipe or deterioration or deformation, or both, of the host pipe does not adversely impact the hydraulic capacity or flow characteristics of the storm or sanitary sewer.

NOTE 1—It should be noted, in many instances, the pipe being retrofitted is not designed to flow at 100 percent capacity, which may provide additional options for downsizing of the inserted pipe.

5.2 *Ancillary materials*—Mechanical fasteners, sealants, grouts and other materials that are or are likely to be exposed to sanitary sewage, sewage gases or other corrosive elements of the sanitary sewer environment should be resistant to deleterious effects of the sanitary sewer environment. Sealants, grouts and other materials must be selected with the ability to adequately cure in underwater, sewage or other corrosive environments.

5.3 *External Loading*—Areas where the host pipe is or may be structurally compromised, or where some or the entire host pipe had been removed will subject the polyethylene pipe to external loads. Information about the resistance of polyethylene pipe (pipe stiffness (PS) or ring stiffness constant (RSC), and buckling resistance) to external hydrostatic and earth loads should be obtained from the pipe manufacturer, and is available in some ASTM polyethylene pipe specifications. Design information about the external load collapse resistance of polyethylene pipe is available in Handbooks and Technical Notes published by the Plastics Pipe Institute.

5.3.1 *Hydraulic Loads*—When the ground water level may be above the polyethylene pipe, the ground water level and its duration should be estimated by the design engineer, and the polyethylene pipe should be designed to withstand the estimated external hydrostatic pressure without collapsing.

5.3.2 *Filling the Annulus*—Filling the annulus between the host pipe and the polyethylene pipe with a cementitious grout or other structurally stable material increases the resistance of the polyethylene pipe to external hydrostatic or structural load, and may improve the overall external load capacity of the host pipe. Flexible pipe such as polyethylene pipe relies in part on materials that surround the pipe for external structural load resistance. Flexible pipe ring stiffness and the stiffness of materials surrounding the flexible pipe act together to support external loads. Structurally stable fill materials are materials that remain in place and resist movement from the rise and fall of groundwater around the pipeline. Fill materials may be able to penetrate into cracks and voids in the host pipe, and in combination with the inserted polyethylene pipe provide partial structural rehabilitation. Host pipe condition assessment per 5.1.1 should identify if filling the annulus is needed for structural reasons. Hydraulic load analysis per 5.3.1 should identify if filling the annulus is needed for hydraulic load resistance.

5.3.3 *Point Excavation Encasement*—At all points where the polyethylene pipe has been exposed, such as at excavations for polyethylene pipe insertion, or for service connections, or excavations at other points where structurally unsound host pipe is removed, the polyethylene pipe, fittings, and service connections should be encased in embedment that provides structural support for the polyethylene pipe. Polyethylene pipe embedment design information is available from organizations such as the Plastics Pipe Institute. If the annulus is not filled (5.3.2), stabilized embedment material should be used to seal the ends of the excavation against embedment migration into the annulus. Stabilized embedment material is at least 6 in. (150 mm) of concrete, or cement-stabilized sand, or other stable high-density material as specified by the design engineer. Preparations for placing of the encasement material include the removal of debris and soil along each side of the host pipe down to the spring line. After the encasement material has been placed and accepted by the design engineer, backfill is placed and compacted to the required finished grade in accordance with the design engineer's specifications. At service connections, care should be taken to ensure compaction of earth beneath the lateral service pipe in order to reduce subsidence that can cause bending at the lateral connection.

5.3.4 *Host Pipe Deterioration*—Structural deterioration of the host pipe may continue after the polyethylene pipe has been installed. Uneven or concentrated point loading on the polyethylene pipe or subsidence of the soil above the host pipe may occur if the host pipe collapses or if large parts of the host pipe fall into the annulus between the host pipe and the polyethylene pipe. This can be avoided by filling the annular space between the inside diameter of the host pipe and the outside diameter of the polyethylene pipe. See 5.3.2.

5.4 *Axial Bending:*

5.4.1 Solid wall polyethylene pipe is relatively flexible such that the barrel of the pipe may be curved during installation. It will accommodate reasonable irregularities in line and grade. Excessive pipe barrel bending during handling and installation that may cause the pipe to kink should be avoided. Axial (longitudinal) bends induced during the insertion step, in transporting pipe lengths from assembly sites to job sites, or permanent bends to accommodate line or grade changes, should not be less than the minimum bending radius in Table 1. The bending radius is the inside radius of curvature.

**TABLE 1 Minimum Bending Radii for Solid Wall Pipe**

| Dimension Ratio, DR | Minimum Bending Radius |
|---|---|
| <9 | 20 × Pipe OD |
| >9 to 13.5 | 25 × Pipe OD |
| >13.5 to 21 | 27 × Pipe OD |
| >21 to 26 | 34 × Pipe OD |
| >26 to 32.5 | 42 × Pipe OD |
| >32.5 | 52 × Pipe OD |
| Fitting, Flange or MJ Adapter in Bend[A] | 100 × Pipe OD |

[A]Because fittings, flange and MJ Adapter connections are rigid compared to the pipe, the minimum bend radius is 100 times the pipe OD when a fitting flange or MJ adapter is present in the bend. The bend radius should be limited to 100 × OD for a distance of about 5 times the pipe OD on either side of the fitting, flange or MJ adapter location.

5.4.2 Axial bending of bell and spigot joined or coupled profile wall or corrugated polyethylene pipe is generally limited by the allowable angular displacement of bell and spigot or spigot and coupling joints. The manufacturer should be contacted for information.

5.5 *Installation Force and Length:*

5.5.1 Butt fusion joined solid wall polyethylene pipes are typically installed by pulling the polyethylene pipe into the host pipe. The length of polyethylene pipe to be inserted by pulling in will seldom be limited by the strength of the pipe itself. Pulling load limitations will usually be in the load capacity of the winch and cable and the length of the pulling cable. Smaller diameter pipe 24 in. (610 mm) or less can usually be handled with winches having about 12-tons-force (110-KN) pulling capacity. Higher capacity pulling equipment, or a combination of pulling and pushing may be applicable to larger pipe, longer lengths, where the host pipe is in poor condition, or where there are bends or offsets that restrict the passage of the polyethylene pipe being inserted.

NOTE 2—For pull in installation, Practice F1804 may be useful for estimating the allowable tensile load for solid wall pipe.

5.5.2 Profile wall or corrugated pipe with bell and spigot joints is inserted by pushing. Typically, the pushing distance is limited by the joint's resistance to telescoping. Pipe pushing load information should be obtained from the manufacturer.

## 6. Inspection and Cleaning

6.1 *Confined Space Safety*—Entry manholes or the existing pipe are usually considered entry into a confined space. Observe appropriate confined space entry requirements in accordance with local, state and federal requirements.

6.2 *Preliminary Investigation*—Visual inspection to determine the condition of the host piping may be practical for large diameter pipes over short distances; however, closed-circuit TV inspection equipment is generally preferred to provide details of problem areas, such as of offset joints, crushed walls, obstructions, and to locate service and other lateral connections and protrusions.

6.3 Remove obstructions, debris, and protruding service lines that interfere with inserting the polyethylene pipe.

6.4 Before the insertion operation, it may be desirable to pass a test-head of the same diameter as the polyethylene pipe through the host pipe to ensure free passage. Test-heads may be made from a short section of the polyethylene pipe with pulling cables attached to both ends so that the test head may be pulled back out if blocked by an obstruction. After passing the test head through the host pipe, the test head should be inspected for damage.

## 7. Excavation

7.1 *Excavation Safety*—Observe all local, state, or federal regulations for excavation safety together with other applicable laws and ordinances covering public and private access, and the protection and safety of the public and property.

7.2 *Insertion Excavations*—For butt fused polyethylene pipes, the insertion excavation down to the springline of the host pipe should have an entry slope grade of at least 2½ to 1. The length of the level excavation should be at least 12 times the diameter of the polyethylene pipe being inserted. The excavation should be as narrow as possible, consistent with the diameter of the pipe, in situ soil, height of water table, and length of the host sewer (see Fig. 1). For single joints being pushed or jacked into position, the length and width of the excavation should at least accommodate the pipe joint laying length (typically 20 ft) and jacking equipment if necessary, (see Fig. 2).

7.3 *Lateral Connection Excavations*—These excavations should be located where the lateral pipe connection to the host sewer can be exposed. These points are located during preliminary investigation in accordance with 6.2. Tapping methods that are remote from the actual point of connection may be used when approved by the design engineer. Provision for sealing and anchoring the connection should be included in remote tapping methods.

## 8. Storage, Handling, and Joining of Polyethylene Pipe

8.1 *Unloading and Storage:*

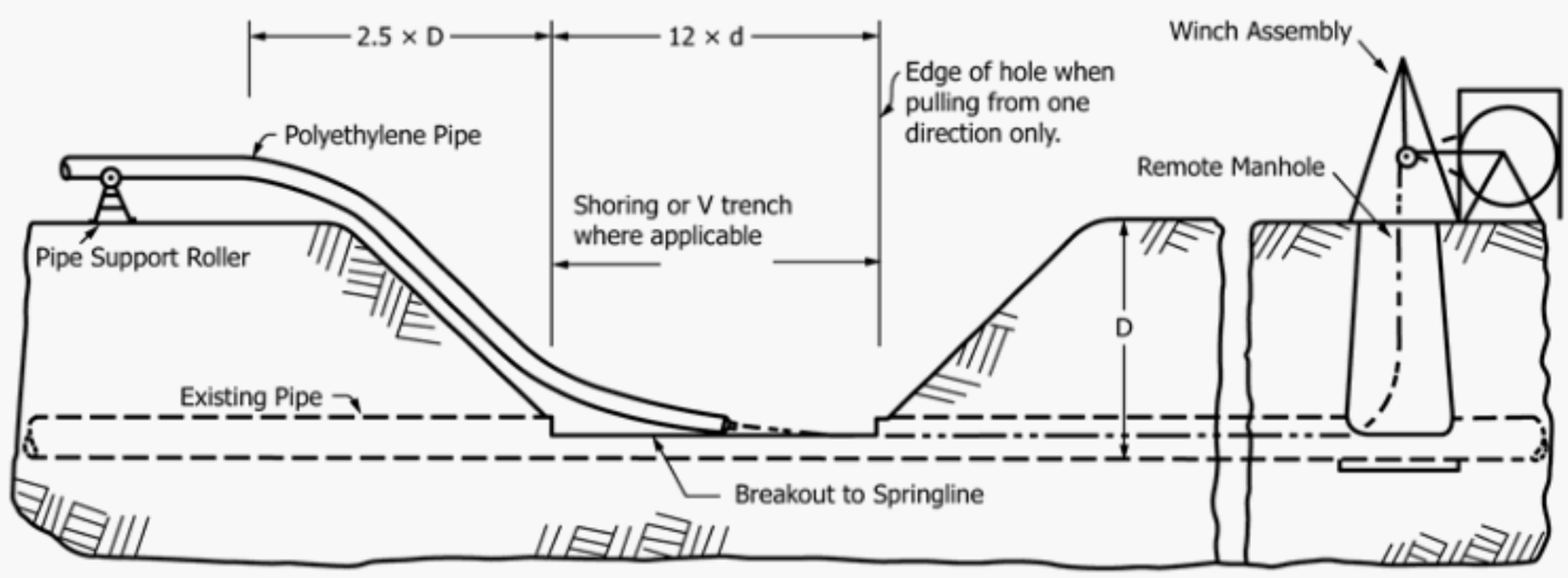


D = Depth to invert
d = Diameter of insert pipe

NOTE—Width of excavation will depend on shoring method or depth of existing pipe, or both. To permit proper flow, break out existing pipe to springline only.

**FIG. 1 Insertion Hole and Pull-in Detail**

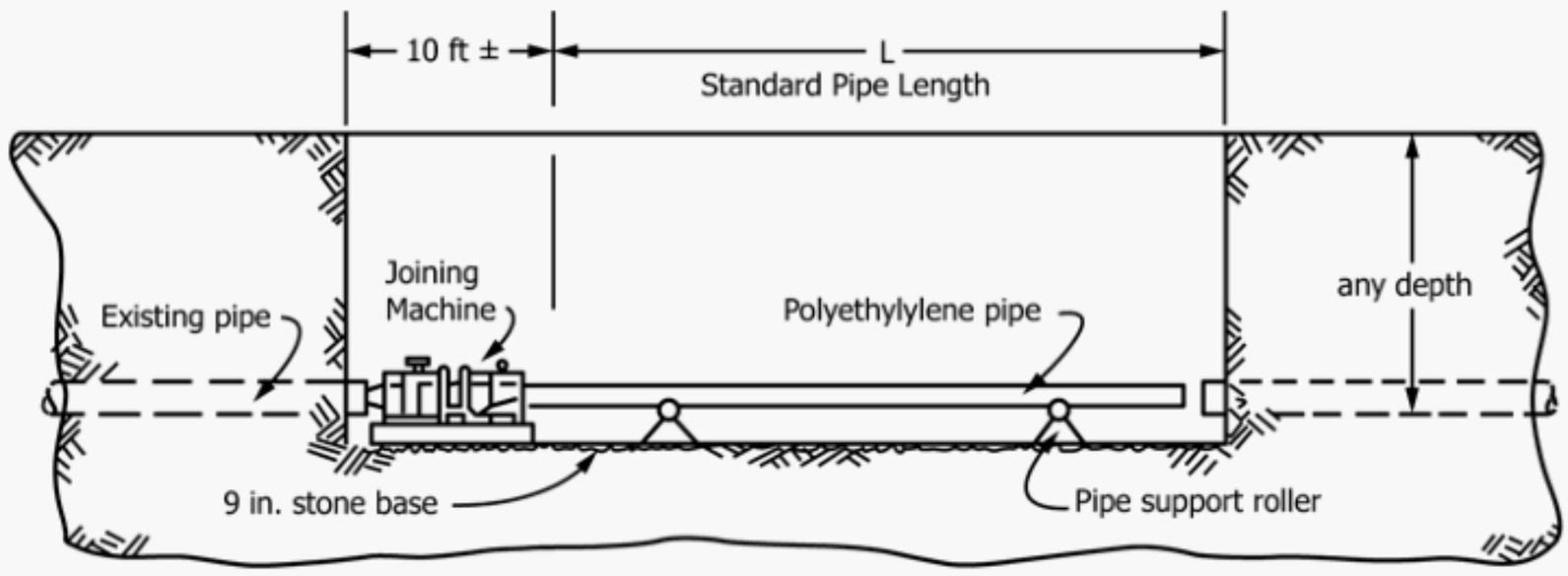


NOTE 1—To maintain existing flow, pump and by pass will be necessary.
NOTE 2—Use appropriate shoring where required.

**FIG. 2 Push Method Hole Detail**

8.1.1 Observe manufacturer's unloading, handling and storage recommendations. General information on polyethylene pipe unloading, handling and storage is available in the PPI Material Handling Guide.

8.1.2 Depending on size, polyethylene pipe lengths are packaged for commercial transport in bundles, layered lengths (strip loads), or individual lengths. Polyethylene pipe should be unloaded from the truck as packaged, and handled with properly rated lifting equipment such as forklifts or lifting boom equipment. Wide fabric slings and spreader bars should be used with lifting boom equipment. Chain or wire ropes are not recommended because pipe can slip and cause injury or damage.

8.1.3 The pipe storage area should be level ground, free of stones, debris, or litter of any type which could create points of loading on pipe in contact with it. Pipe should be stored as packaged (in bundles) for transport, and not removed from packaging until needed for installation. If pipe packages (bundles) are stacked, the stacks should not be more than 4-6 ft in height, and pipe packages (bundles) should be removed from the stack and placed on the ground before removing pipes from the package.

8.1.4 Individual pipes may be placed in a pyramidal pile of no more courses than recommended in the manufacturer's literature and chocked to prevent roll-out of the bottom layer. The bottom courses should have the ends of the pipe covered to prevent dirt or debris or small animals from entering the pipes.

8.1.5 Care should be taken to minimize handling damage. Black polyethylene pipe need not be protected from sunlight or weather for indefinite storage periods. Non-black polyethylene pipe such as grey or green is generally suitable for unprotected outdoor storage for at least 6 months. Manufacturer's recommendations for extended storage should be observed.

8.2 *Inspection:* Pipe should be inspected for damage upon receipt at the jobsite, and immediately prior to joining. Receiving damage should be noted on receiving documents and reported to the supplier for disposition. Damage such as serious abrasion, cutting, or gouging of the outside or inside surface extending to more than 10 % of the wall thickness in depth, or kinking due to excessive or abrupt bending should be cut out and discarded.

8.3 *Joining:*

8.3.1 Butt fusion in accordance with Practice F2620 is the primary method for joining solid wall pipe into appropriate lengths. Butt-fusion requires training and experience to develop appropriate joining skills and should only be undertaken by persons that have been trained in the process.

8.3.2 Profile wall pipe is joined using gasketed spigot and bell joints, gasketed couplings, extrusion welding, heat fusion in accordance with Practice F2620, or electrofusion. Extrusion welding is used to supplement gasketed spigot and bell joints and gasketed couplings when axial restraint is necessary.

8.3.3 Before using joining equipment in the trench or manhole, evaluate the atmosphere in accordance with local, state, or federal regulations to determine the presence of flammable or toxic vapors.

8.3.4 Mechanical connections such as flanges, mechanical joint adapters, OD clamps may be used for connections to other pipes, or appurtenances are required. See Fig. 3. Mechanical connections should be evaluated by the engineer for annular clearance and axial load resistance. All mechanical joints should be supported to distribute shear and bending loads that may cause flexing away from the area of the joint. The potential for pull-out arising from thermal contraction should be considered in the design of an insertion-joined pipeline using mechanical connections.

## 9. Insertion and Termination

9.1 *Insertion*—Pipe may be pulled (see Fig. 1) or pushed (see Fig. 4) into the existing piping. Pull and push techniques can sometimes be combined for the placement of unusually heavy-walled or exceptionally long lengths of polyethylene pipe, or where equipment load capacity limits the use of the pull technique, pushing or a push-pull combination technique may be used to extend the insertion distance.

9.1.1 Whether pulling or pushing installation is used, a tapered nose-cone or pulling head to guide the pipe end past minor obstructions and prevent entry of debris is necessary. See Fig. 5 and Fig. 6. A nose cone or pulling head is usually open to allow flow into the insertion pipe.

9.1.2 Whether pulling or pushing installation is used, a tapered nose-cone or pulling head to guide the pipe end past minor obstructions and prevent entry of debris is necessary.

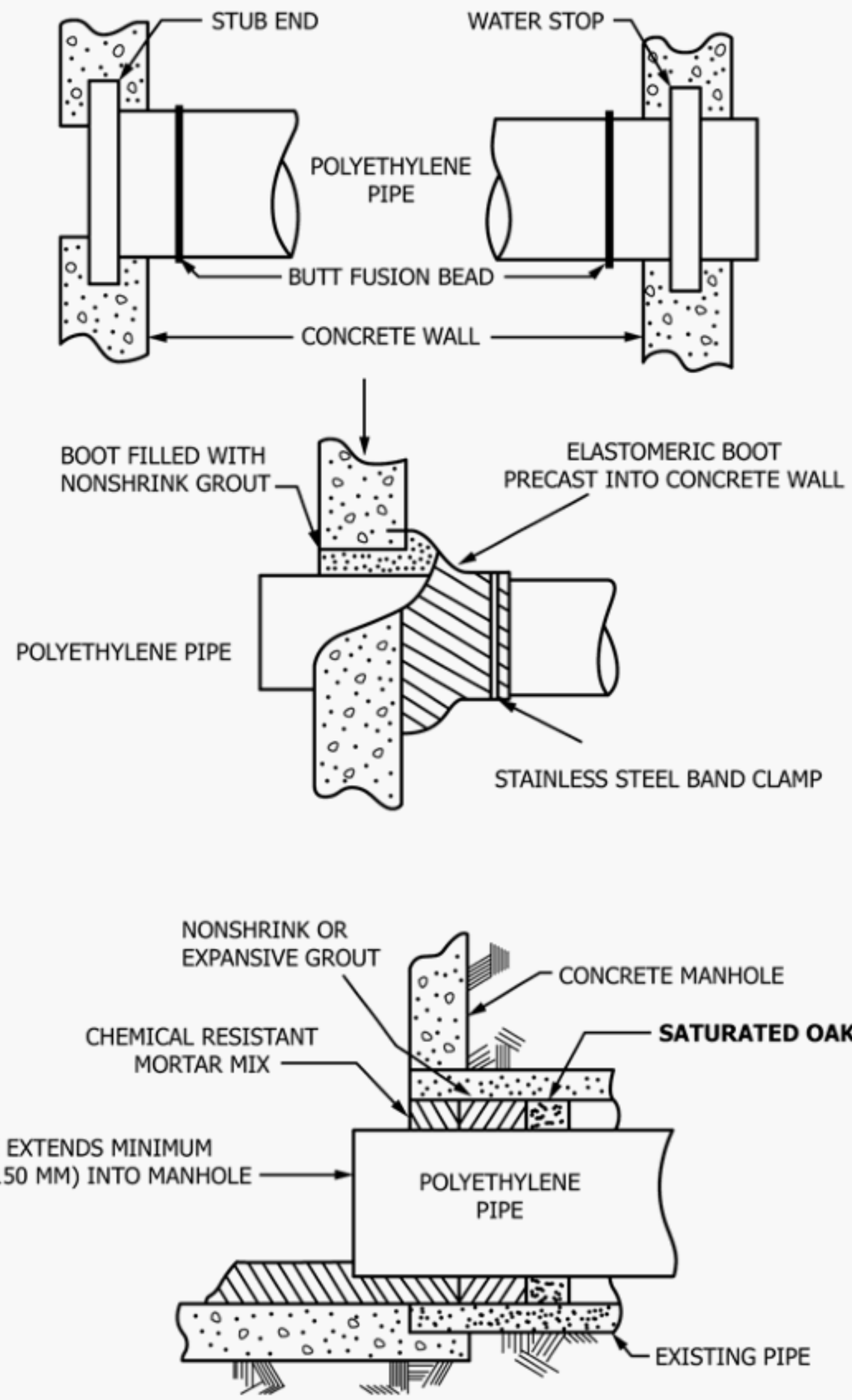


**FIG. 3 Typical Manhole Seal**

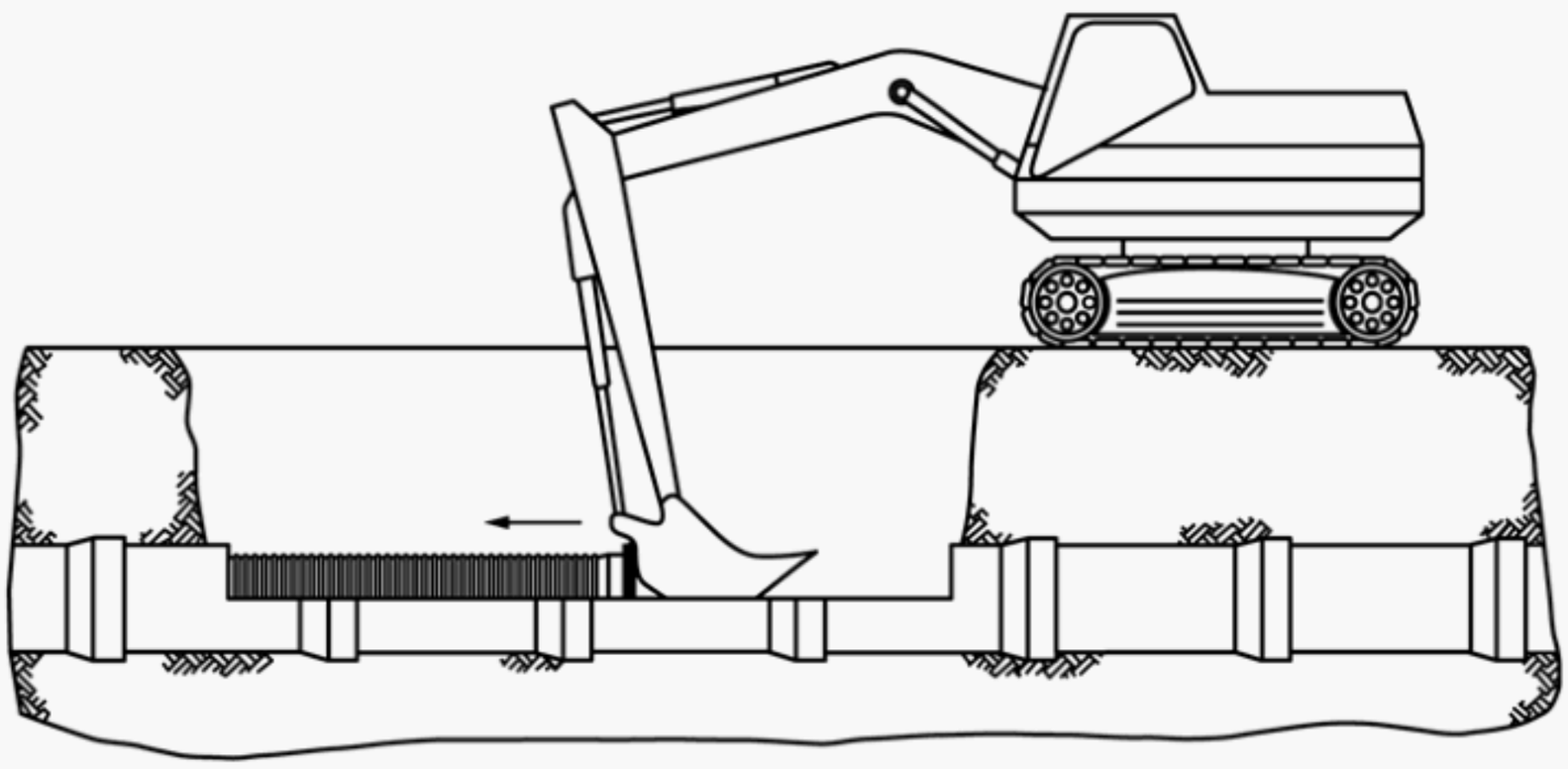

**FIG. 4 Push Method for Bell and Spigot**

See Fig. 5 and Fig. 6. A nose cone or pulling head is usually open to allow flow into the insertion pipe.

9.1.3 It may also be necessary to install temporary guards over the edges of the existing pipe at the inlet end to protect the

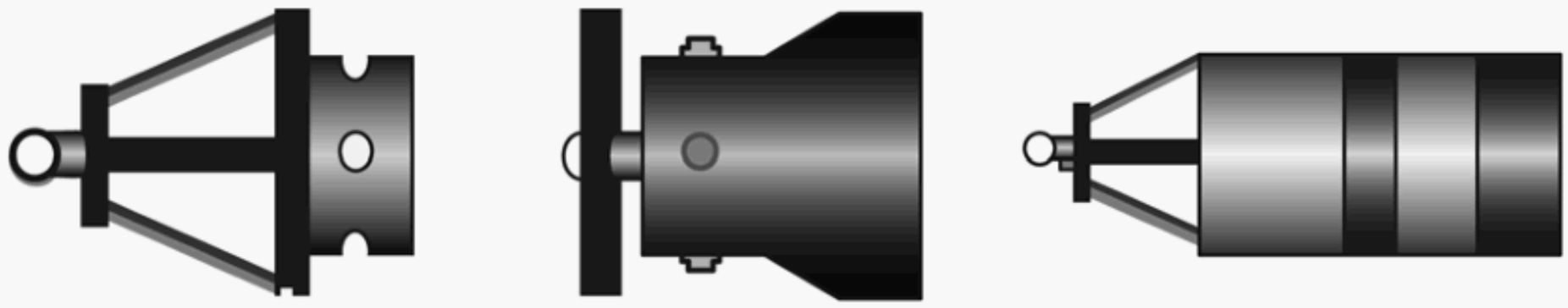

FIG. 5 Pulling Head

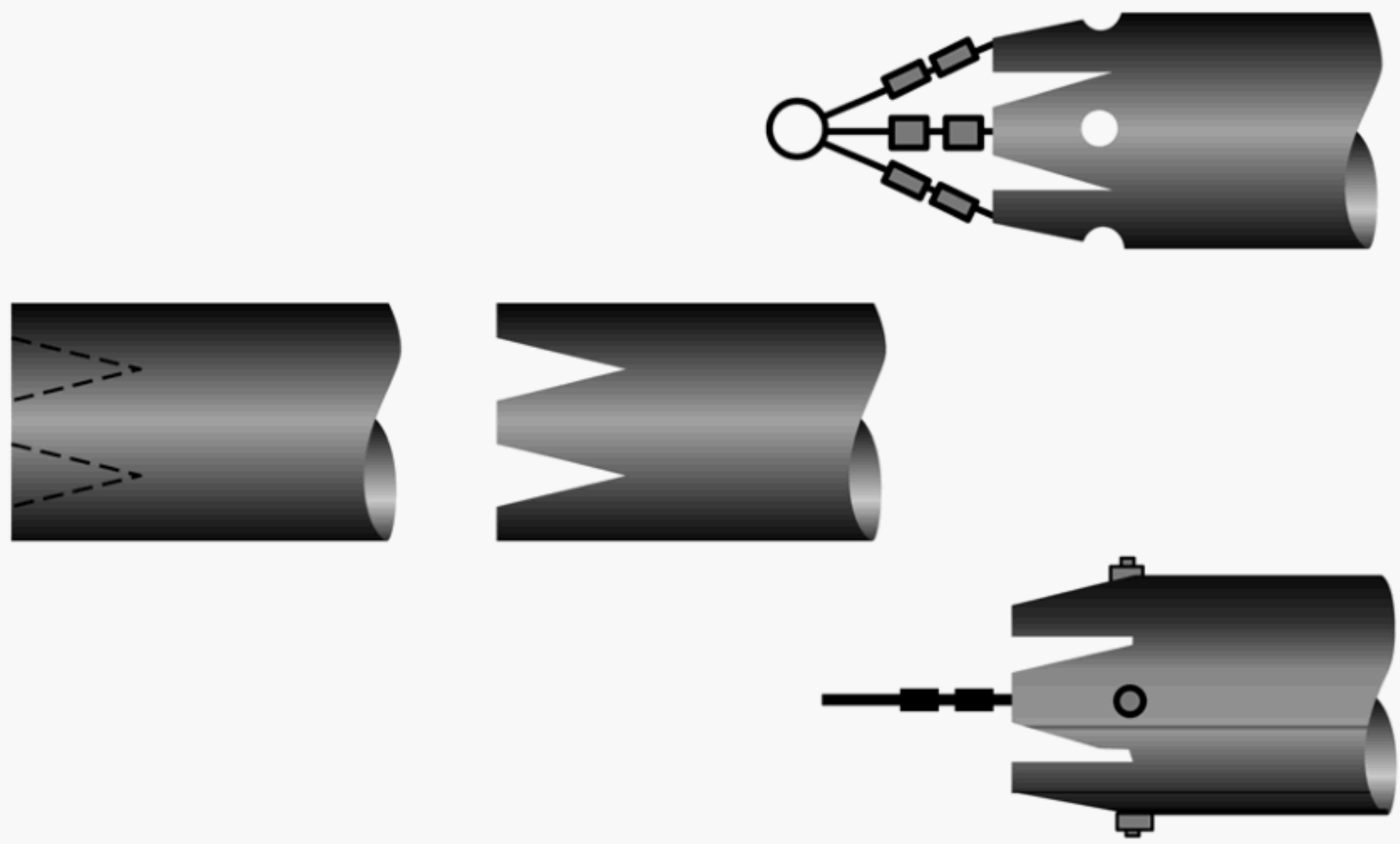

FIG. 6 Field Fabricated Pulling Head

polyethylene pipe against gouging and excessive surface abrasion during insertion. Split rings of polyethylene pipe may be useful for this purpose.

9.1.4 Fused lengths of solid wall polyethylene pipe may be pulled into place using a cable and winch arrangement. See Fig. 1.

9.1.4.1 For pulling or combination push-pull insertion, a cable from a winch or pulling device at a manhole or shaft the end of the insertion length is fed through the existing piping and attached to a nose cone or pulling head on the polyethylene pipe. The winch or pulling device is usually at surface grade; therefore, a pulley frame is installed at the base of a manhole or shaft to direct the cable from vertically down the manhole or shaft, then horizontally through the existing piping. The pulley frame should be constructed to withstand axial loads required to insert the pipe, and vertical loads from the winch at top of the manhole or shaft. The winch is usually powered; but a hand-operated winch may be sufficient for the insertion of small piping. Load controls are desirable to prevent overstressing the equipment in case of a blockage. When pulling equipment can exert greater tensile load than the pipe can safely withstand, a break-away device should be installed between the nose cone or pulling head and the winch cable. Practice F1804 may be used to determine the pipe's allowable tensile load, ATL.

9.1.5 The insertion operation often proceeds with a "slip-stick" action. Therefore, a means of coordinating the feed of pipe into the entrance with winch operation is desirable. The pulling operation will tend to stretch the pipe, and excessive stretching (more than 1.5 %) should be avoided. The pulling speed should not exceed about 360 ft/h (110 m/h). Slower speeds will be necessary under more difficult conditions. Once started, pulling should continue without interruption until completed.

9.1.6 On reaching the exit point, the pipe should be pulled beyond this point as advised by the coordinator at the entrance point. Stretching of about 1 % of the total length pulled will often be observed. This stretching will be recovered over a period of time. A 24 h relaxation period is recommended. Additionally, pipe length change due to temperature change may be observed. This can be as much as 1 in./100 ft/10 °F (20 mm/30 m 5 °C) difference in temperature between the pipe before and after installation and this should be allowed for in the length of insertion pipe used. Before insertion, polyethylene pipe temperature and existing pipe temperature should be measured with a pyrometer or infrared temperature gauge, and the temperature difference used to determine pipe shrinkage due to temperature reduction. To assure that the ends of the polyethylene pipe extend past the entrance and exit of the existing pipe after the stabilization period, the polyethylene

pipe should be pulled past the end of the existing pipe by an amount equal to estimated stretching length plus temperature reduction length.

$$L_A = 0.01L + \left(\frac{L\Delta T}{12000}\right) \quad (1)$$

$L_A$ = Length to extend past existing pipe exit, ft.
$L$ = Polyethylene pipe length, ft.
$\Delta T$ = Temperature difference between polyethylene pipe and existing pipe, °F.

9.1.7 *Push Insertion*—Butt fused lengths of polyethylene pipe may be pushed into place using a choke cable. See Fig. 7. For bell and spigot joined pipe, each joint of pipe may be pushed in place, see Fig. 4. When bell and spigot-jointed pipe is installed using the pushing method, flow in the host line is permitted. Optimum conditions are achieved when the flow is at or below the springline. Maintaining the flow will reduce pushing force requirements and eliminate the need for by passing pumping. Insertion is accomplished in an incremental process. When a joint is lowered into the insertion pit, it is joined to the previous pipe. This pipe joint and previous joints are pushed up the line to make room for the next pipe joint. This process is continued until length of the host pipe has been lined. This technique also permits the lining of curve sections using short lengths of pipe. After the recommended 24 h relaxation period following the insertion of the polyethylene pipe, each individual service connection and lateral can be added to the new system. One common method of making these connections involves the use of a wrap-around service saddle. The saddle is placed over a hole that has been cut through the liner pipe, and the gasket assembly is then fastened into place with stainless steel bands. Additional joint integrity can be obtained by extrusion welding of the lap joint created between the saddle base and the liner. By extending the saddle into the branch opening, the service lateral can then be connected into the saddle. Once the lateral has been connected, the entire area can be stabilized by following standard direct burial procedures. For pressure applications, lateral connections can be made using sidewall fusion of branch saddles onto the liner. As an alternate, a molded or fabricated tee may be fused or flanged into the liner at the point where the lateral connection is required (see Fig. 2).

9.1.7.1 If the work is done during warm weather, contraction of the polyethylene pipe may be observed. This can be as much as 1 in./100 ft/10 °F (20 mm/30 m/5 °C) difference in temperature between the pipe before and after installation. Before insertion, polyethylene pipe temperature and existing pipe temperature should be measured with a pyrometer or infrared temperature gauge, and the temperature difference used to determine pipe shrinkage due to temperature reduction. To assure that the ends of the polyethylene pipe extend past the entrance and exit of the existing pipe after the stabilization period, the polyethylene pipe should be pulled past the end of the existing pipe by an amount equal to estimated stretching length plus temperature reduction length.

$$L_B = \left(\frac{L\Delta T}{12000}\right) \quad (2)$$

$L_B$ = Length to extend past existing pipe entrance, ft.
$L$ = Polyethylene pipe length, ft.
$\Delta T$ = Temperature difference between polyethylene pipe and existing pipe, °F.

9.2 *Termination and Service Connections:*

9.2.1 After insertion, the polyethylene pipe should be allowed to stabilize undisturbed for a 24 h period.

9.2.2 The annular space between the liner pipe and the original pipe may be filled with grout or other material if required by the design engineer. Grouting will stabilize the line against flotation off-grade and collapse due to external ground water pressure. During the grouting process the installer should take care not to exceed the allowable grouting pressure of the pipe. The grouting pressure can be calculated using Love's

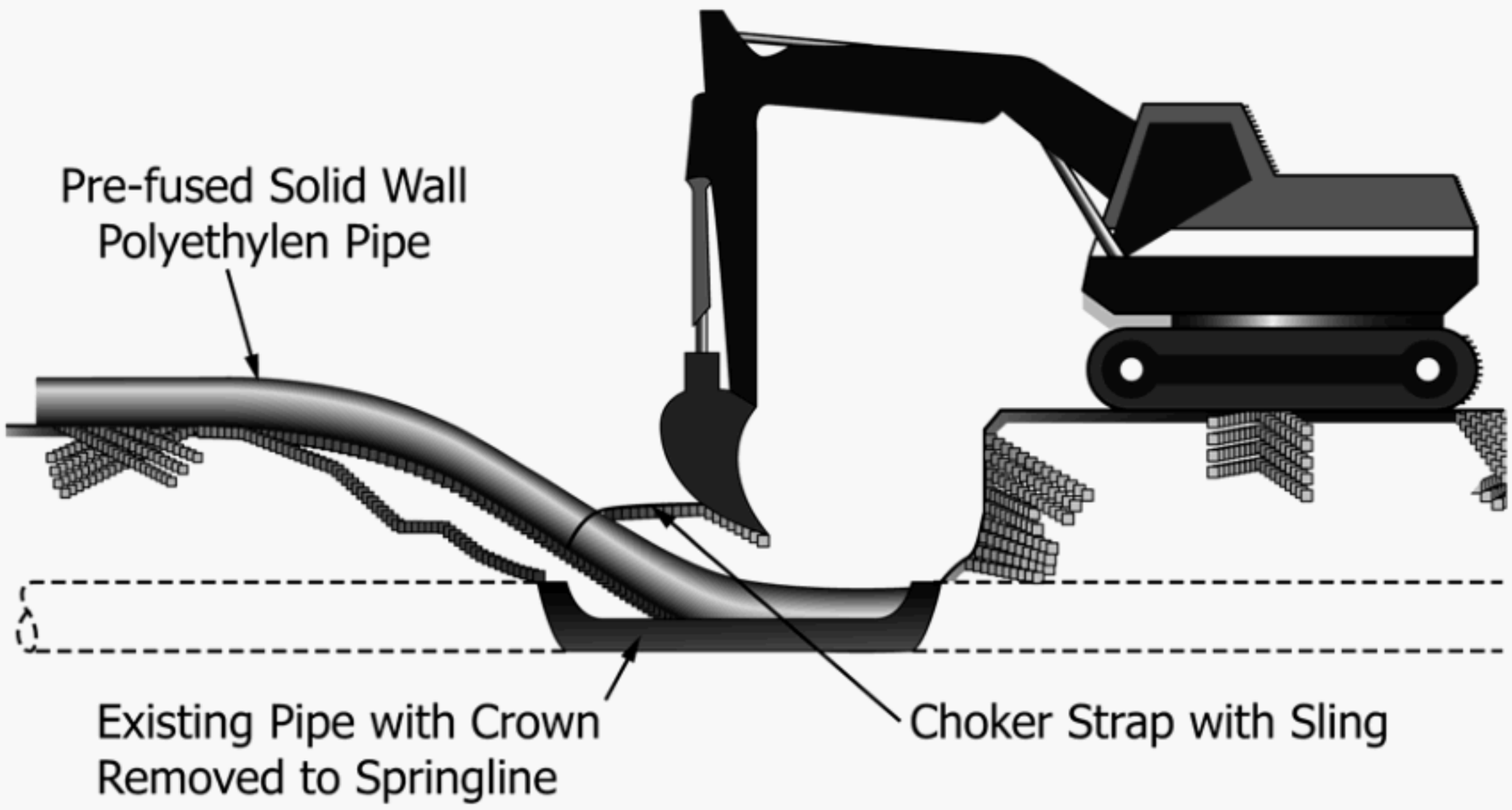


FIG. 7 Alternate Push Technique

Equation with appropriate safety factors or the manufacturer can be consulted. It is suggested that the installer place standpipes and other means of regulating grout pressure in the line.

9.2.3 At entries and exits from manholes, the annular space between the original and inserted pipes should be sealed. The sealing compound used must be recommended for underwater application and have elastomeric properties. Products used should be approved by the engineer. Typical manhole connections are shown in Fig. 3.

9.2.4 Following the insertion of the polyethylene pipe, each individual service and lateral connections can be added to the new system

9.2.4.1 Service and lateral connections that are not in manholes require a bell-hole excavation, and removal of the top half of the existing pipe to expose the polyethylene pipe.

9.2.4.2 One common method of making these connections involves the use of a wrap-around service saddle. A hole is cut through the polyethylene pipe, a gasket placed around the hole, the saddle is placed over the gasket, and the assembly is secured with stainless steel bands. Additional joint integrity can be obtained by extrusion welding of the lap joint created between the saddle base and the polyethylene. The service or lateral can then be connected to the saddle.

9.2.4.3 Once the service or lateral has been connected, the entire area should be stabilized by following standard direct burial procedures. For pressure applications, lateral connections can be made using sidewall fusion of branch saddles onto the polyethylene pipe. As an alternate, a molded or fabricated tee may be fused or flanged into the polyethylene pipe at the point where the lateral connection is required (see Fig. 8).

## 10. Finishing and Restoration

10.1 Whenever necessary, manholes should be rebenched to suit the contours of the new pipe.

10.2 Shafts should be backfilled in accordance with local requirements to minimize subsidence and permit surface restoration in accordance with the terms of the contract.

## 11. Inspection and Acceptance

11.1 The installation may be inspected visually if appropriate or by closed-circuit TV if visual inspection cannot be accomplished. Variations from the true line and grade may be inherent because of the condition of the original piping. Minor distortion of the inserted pipe may be observed, but localized dimpling, reverse bending of the pipe walls, or flattening resulting in more than a 10 % reduction in diameter should be corrected. No infiltration of ground water should be observed. All service entrances should be accounted for and be unobstructed. A summary report with photographs should be submitted to the engineer.

11.2 When the engineer has deemed that a leakage test is required, Practice F1417 should be observed.

## 12. Keywords

12.1 conduit; insertion renewal; polyethylene pipe; rehabilitation; sanitary sewer; sliplining; storm sewer; trenchless

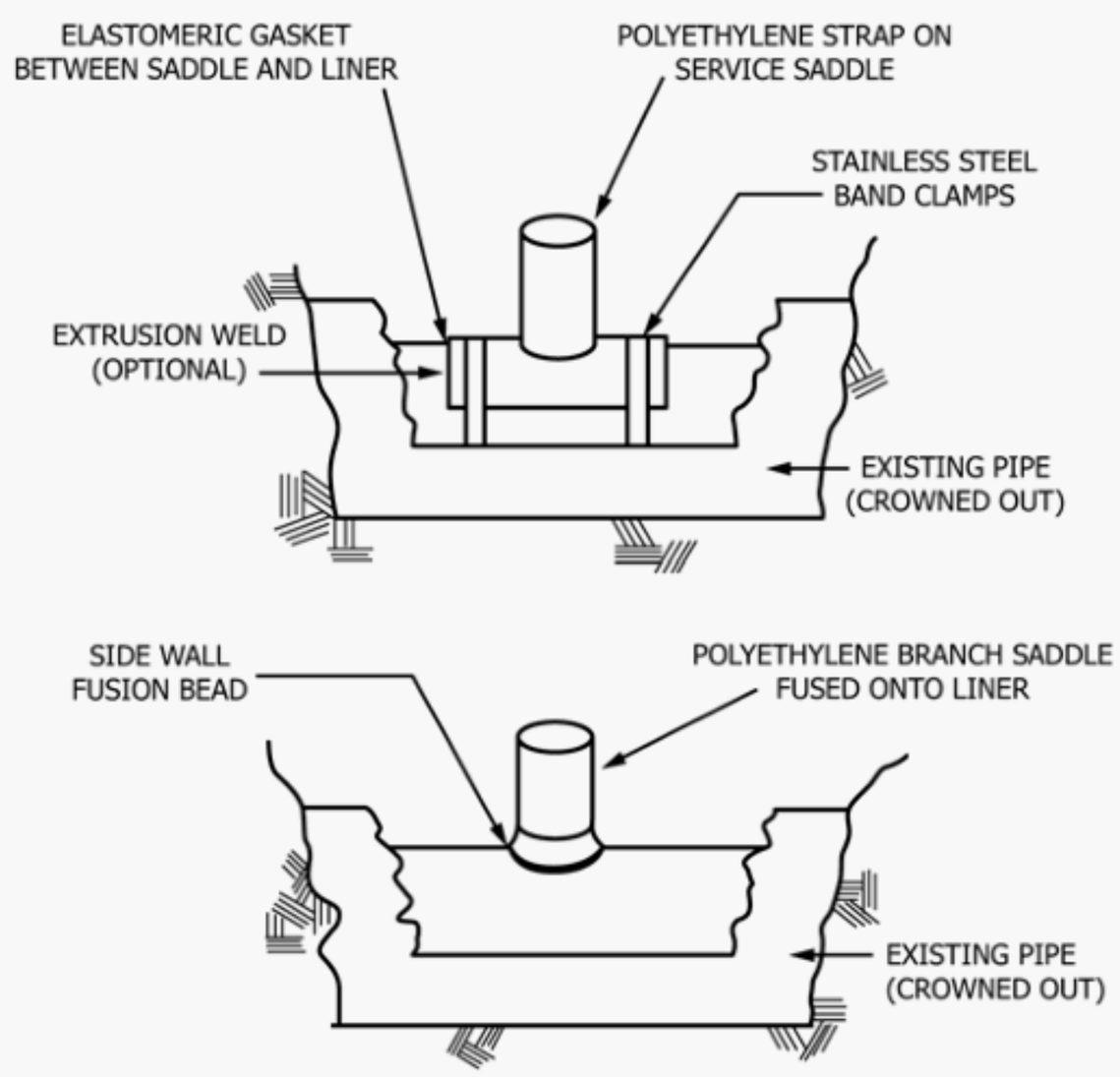


FIG. 8 Lateral Service Connections

## SUMMARY OF CHANGES

Committee F17 has identified the location of selected changes to this standard since the last issue (F585–13) that may impact the use of this standard.

*(1)* Inclusion of a new 5.1.6 and new Note 1 to clarify hydraulic capacity and design issues.

*ASTM International takes no position respecting the validity of any patent rights asserted in connection with any item mentioned in this standard. Users of this standard are expressly advised that determination of the validity of any such patent rights, and the risk of infringement of such rights, are entirely their own responsibility.*

*This standard is subject to revision at any time by the responsible technical committee and must be reviewed every five years and if not revised, either reapproved or withdrawn. Your comments are invited either for revision of this standard or for additional standards and should be addressed to ASTM International Headquarters. Your comments will receive careful consideration at a meeting of the responsible technical committee, which you may attend. If you feel that your comments have not received a fair hearing you should make your views known to the ASTM Committee on Standards, at the address shown below.*

*This standard is copyrighted by ASTM International, 100 Barr Harbor Drive, PO Box C700, West Conshohocken, PA 19428-2959, United States. Individual reprints (single or multiple copies) of this standard may be obtained by contacting ASTM at the above address or at 610-832-9585 (phone), 610-832-9555 (fax), or service@astm.org (e-mail); or through the ASTM website (www.astm.org). Permission rights to photocopy the standard may also be secured from the Copyright Clearance Center, 222 Rosewood Drive, Danvers, MA 01923, Tel: (978) 646-2600; http://www.copyright.com/*