This international standard was developed in accordance with internationally recognized principles on standardization established in the Decision on Principles for the Development of International Standards, Guides and Recommendations issued by the World Trade Organization Technical Barriers to Trade (TBT) Committee.

Designation: F746 – 04 (Reapproved 2021)

Standard Test Method for Pitting or Crevice Corrosion of Metallic Surgical Implant Materials[1]

This standard is issued under the fixed designation F746; the number immediately following the designation indicates the year of original adoption or, in the case of revision, the year of last revision. A number in parentheses indicates the year of last reapproval. A superscript epsilon (ε) indicates an editorial change since the last revision or reapproval.

1. Scope

1.1 This test method covers the determination of resistance to either pitting or crevice corrosion of metals and alloys from which surgical implants will be produced. It is a modified version of an established test[2] and is used as a screening test to rank surgical implant alloys in order of their resistance to localized corrosion.

1.2 This test method applies only to passive metals and alloys. Nonpassive alloys (other than noble alloys) are susceptible to general corrosion and are not normally suitable for implant use.

1.3 This test method is intended for use as a laboratory screening test for metals and alloys which undergo pitting or crevice corrosion, or both.

1.4 The values stated in either SI units or inch-pound units are to be regarded separately as standard. The values stated in each system may not be exact equivalents; therefore, each system shall be used independently of the other. Combining values from the two systems may result in nonconformance with the standard.

1.5 *This standard does not purport to address all of the safety concerns, if any, associated with its use. It is the responsibility of the user of this standard to establish appropriate safety, health, and environmental practices and determine the applicability of regulatory limitations prior to use.*

1.6 *This international standard was developed in accordance with internationally recognized principles on standardization established in the Decision on Principles for the Development of International Standards, Guides and Recommendations issued by the World Trade Organization Technical Barriers to Trade (TBT) Committee.*

2. Referenced Documents

2.1 *ASTM Standards:*[3]

D1193 Specification for Reagent Water

F86 Practice for Surface Preparation and Marking of Metallic Surgical Implants

F2129 Test Method for Conducting Cyclic Potentiodynamic Polarization Measurements to Determine the Corrosion Susceptibility of Small Implant Devices

G3 Practice for Conventions Applicable to Electrochemical Measurements in Corrosion Testing

G5 Reference Test Method for Making Potentiodynamic Anodic Polarization Measurements

G15 Terminology Relating to Corrosion and Corrosion Testing (Withdrawn 2010)[4]

3. Summary of Test Method

3.1 A cylindrical specimen fitted with an inert tapered collar is immersed in a phosphate buffered saline electrolyte at 37 °C for 1 h to establish a corrosion potential. Pitting (or crevice corrosion) is then stimulated by potentiostatically polarizing the specimen to a potential much more noble than the corrosion potential. Stimulation of pitting (or crevice corrosion) will be marked by a large and generally increasing polarizing current.

3.2 Immediately after the stimulation step, the potential is decreased as rapidly as possible to one of several preselected potentials at, or more noble than, the corrosion potential. If the alloy is susceptible to pitting (or crevice corrosion) at the preselected potential, the polarizing current will remain at relatively high values and will fluctuate or increase with time. A post-test examination of the metal specimen establishes whether localized corrosion has occurred by pitting of the exposed surface or by preferential attack at the crevice formed by the tapered collar, or both.

3.3 If the pit (or crevice) surface repassivates at the preselected potential and localized corrosion is halted, the polarizing

[1] This test method is under the jurisdiction of ASTM Committee F04 on Medical and Surgical Materials and Devices and is the direct responsibility of Subcommittee F04.15 on Material Test Methods.

Current edition approved Aug. 1, 2021. Published August 2021. Originally approved in 1981. Last previous edition approved in 2014 as F746 – 04 (2014). DOI: 10.1520/F0746-04R21.

[2] Syrett, B. C., *Corrosion*, Vol 33, 1977, p. 221.

[3] For referenced ASTM standards, visit the ASTM website, www.astm.org, or contact ASTM Customer Service at service@astm.org. For *Annual Book of ASTM Standards* volume information, refer to the standard's Document Summary page on the ASTM website.

[4] The last approved version of this historical standard is referenced on www.astm.org.

Copyright © ASTM International, 100 Barr Harbor Drive, PO Box C700, West Conshohocken, PA 19428-2959. United States

current will drop to values typical for passive surfaces and the current will decrease continuously. The parameter of interest, the critical potential for pitting (or crevice corrosion), is defined as the highest (most noble) preselected potential at which pit (or crevice) surfaces repassivate after the stimulation step.

4. Significance and Use

4.1 This test method is designed solely for determining comparative laboratory indices of performance. The results may be used for ranking alloys in order of increasing resistance to pitting and crevice corrosion under the specific conditions of this method. It should be noted that the method is intentionally designed to reach conditions that are sufficiently severe to cause breakdown of at least one alloy (Type 316 L stainless steel) currently considered acceptable for surgical implant use, and that those alloys which suffer pitting or crevice corrosion during the more severe portions of the test do not necessarily suffer localized corrosion when placed within the human body as a surgical implant.

5. Apparatus

5.1 The following required equipment is described in Reference Test Method G5:

5.1.1 *Standard Polarization Cell,* of 1000 cm^3.

5.1.2 *Electrode Holders,* for auxiliary and working electrodes.

5.1.3 *Potentiostat,* calibrated in accordance with Reference Test Method G5.

5.1.4 *Potential-Measuring Instrument.*

5.1.5 *Current-Measuring Instrument.*

5.1.6 *Anodic Polarization Circuit.*

5.1.7 *Platinum Auxiliary Electrodes.*

5.1.8 *Saturated Calomel Electrode* (SCE).

5.1.9 *Salt Bridge Probe.*

5.2 A cylindrical working electrode is fabricated from the test material by machining, grinding, and suggested final polishing with 600-grit metallographic paper. It is suggested that the part of the cylindrical specimen that is exposed to the test solution have a length of 20.00 ± 1.00 mm [0.787 ± 0.039 in.] and a diameter of 6.35 ± 0.03 mm [0.250 ± 0.001 in.] (see Fig. 1).

5.3 A crevice is created by fitting the cylindrical specimen with a tapered collar, machined from commercial purity polytetrafluoroethylene (PTFE). The collar should have an outer diameter of 12.70 ± 0.05 mm [0.500 ± 0.002 in.] and a thickness of 3.18 ± 0.20 mm [0.125 ± 0.008 in.]. The inside diameter of the tapered collar should range from 0.38 mm [0.015 in.] smaller than the diameter of the specimen to 0.38 mm [0.015 in.] larger. To be consistent with the dimensions suggested in 5.2, the inside diameter should taper from 5.97 ± 0.05 mm [0.235 ± 0.002 in.] to 6.73 ± 0.05 mm [0.265 ± 0.002 in.]. See Fig. 1 for drawing of the tapered collar. The relatively fine tolerances are needed to ensure a reproducible fit and crevice.

5.4 In Reference Test Method G5, the method of specimen attachment is to drill and tap the specimen to receive a threaded stainless steel connection rod. A 4-40 thread is used, typically. However, because many surgical implant alloys are not easily drilled, external threads may also be machined, ground, or cast, as illustrated in Fig. 1. A small stainless steel adapter is fitted onto these threads and the adapter then accepts the connection rod.

5.5 Determine the total exposed surface area of the specimen before placement of the PTFE collar, A_T; determine the area on the internal surface of the collar (the creviced area), A_C; and determine the exposed surface area of the specimen after placement of the collar, A_S (where: $A_S = A_T - A_C$). Dimensions should be measured to the nearest 0.1 mm.

5.5.1 *Example*—Using the dimensions suggested previously for the specimen diameter (d = 6.35 mm), the specimen length (l = 20.00 mm), and the collar thickness (t = 3.18 mm),

$$A_T = \pi dl + \frac{\pi d^2}{4} = 431 \text{ mm}^2 \quad (1)$$

$$A_C = \pi dt = 63 \text{ mm}^2 \quad (2)$$

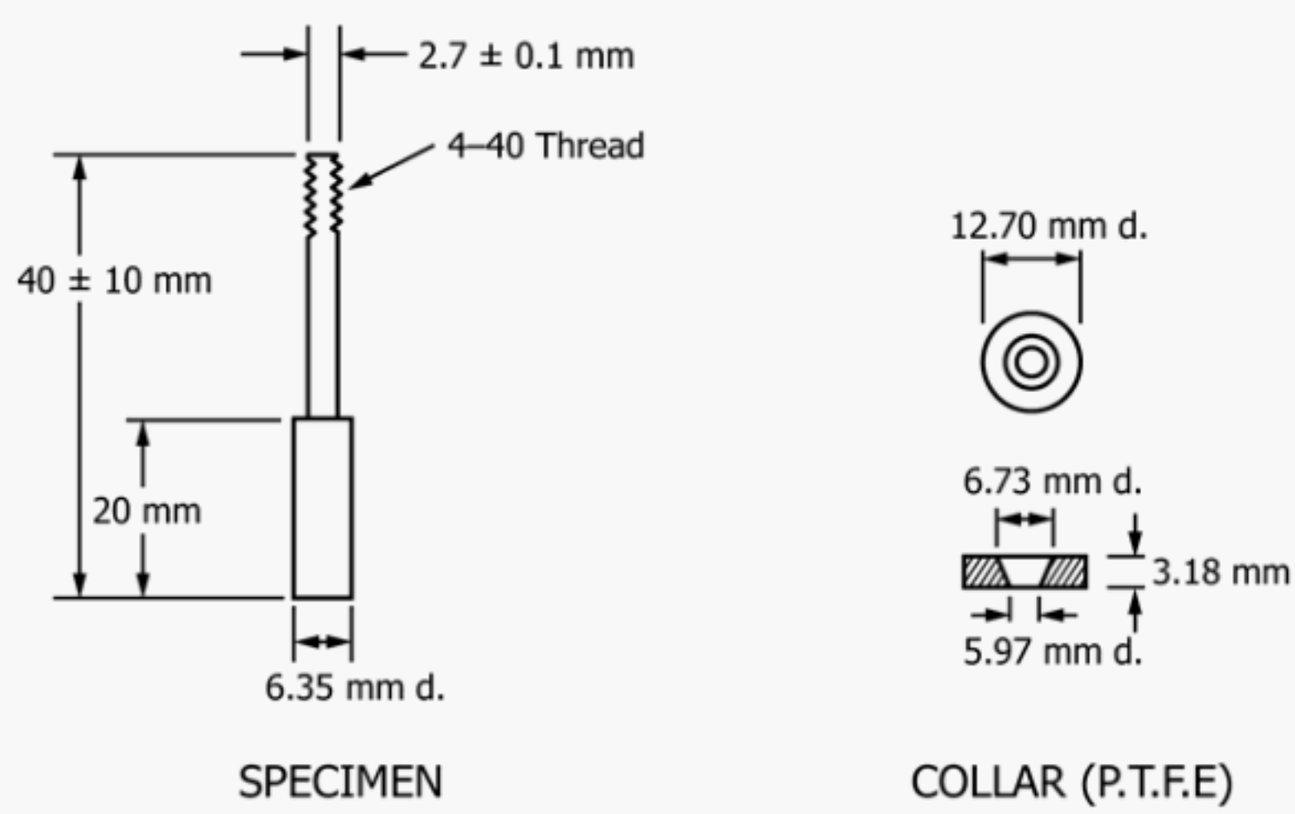

NOTE 1—Unless shown, dimensional tolerances are given in text.

FIG. 1 Dimensions of Specimen and Collar

$$A_S = A_T - A_C = 386 \text{ mm}^2 \quad (3)$$

6. Reagents

6.1 *Electrolyte*—Unless otherwise specified, phosphate buffered saline (PBS) should be used as the standard test solution. A standard PBS formulation (see Table X2.3 of Test Method F2129) is the following: NaCl 8.0 g/L, KCl 0.2 g/L, $Na_2HPO_4 \cdot 12H_2O$ 1.15 g/L, KH_2PO_4 0.2 g/L, and bring to 1 L volumetrically using distilled water.

6.1.1 The water shall be distilled conforming to the purity requirements of Specification D1193, Type IV reagent water.

6.1.2 After transferring the appropriate amount of electrolyte to the test cell (7.5), the pH is measured both before and after the test.

7. Preparation of Specimens and Conditioning

7.1 Prepare the test specimen surface within 1 h of the start of the experiment by the method described in Reference Test Method G5.

7.2 Using a suitable mechanical jig, force-fit the PTFE collar onto the cylindrical specimen so that the base of the collar is up 10 ± 2 mm [0.393 ± 0.079 in.] from the bottom of the specimen (see Fig. 2). Care should be taken to avoid scratching the metal surface.

NOTE 1—Once the collar is removed from the specimen, it should not be reused.

7.3 Mount the specimen on the holder and on the electrode rod as described in Reference Test Method G5.

7.4 Ultrasonically degrease the electrode assembly in either acetone, toluene, or boiling benzene (with caution, under hood), rinse in distilled water, and dry.

7.5 Transfer 500 mL of electrolyte solution to a clean polarization cell. Bring the temperature of the solution to 37 ± 1 °C by immersing the test cell in a controlled temperature water bath or by other suitable means.

7.6 Place the platinum auxiliary electrodes, salt bridge probe, and other components in the test cell and temporarily close the center opening with a stopper. Fill the salt bridge with the electrolyte.

NOTE 2—The levels of the solution in the reference and the polarization cells should be the same to avoid siphoning. If this is not possible, a solution-wet (not greased) stopcock can be used in the salt bridge to eliminate siphoning.

7.7 Transfer the specimen electrode assembly to the test cell and adjust the submerged salt bridge probe tip so it is about 2 mm [0.08 in.] from the center of the bottom portion of the specimen (below the collar).

8. Procedure

8.1 Continuously record the corrosion potential of the working electrode (specimen) with respect to the saturated calomel electrode for 1 h, starting immediately after immersing the specimen. The potential observed upon immersion in the electrolyte shall be called the initial corrosion potential. The potential at the end of the 1 h shall be known as the final corrosion potential, E_1.

8.2 After the 1-h period, the potential should be potentiostatically shifted to +0.8 V (saturated calomel electrode (SCE)) to stimulate pitting (or crevice corrosion).

NOTE 3—In the stimulation step, the change in potential either from E_1 or from one of the preselected potentials to +0.8 V (SCE) should be essentially instantaneous. Such instantaneous changes are facilitated by use of a two-channel potentiostat in which the new control voltage can be selected on the channel not in use. However, if a single channel potentiostat is used, it should be switched temporarily to the standby mode (no impressed current) while the set-potential control is being adjusted to a setting of +0.8 V (SCE); after the adjustment is made, the potentiostat should be switched from the standby mode to the operate mode to allow stimulation of localized corrosion. After stimulation, the single-channel potentiostat must remain in the operate mode during the shift to the preselected potential, and the latter shift should be performed manually as rapidly as possible. Manual shifting of the potential may also be necessary after the stimulation step when using a two-channel potentiostat if the

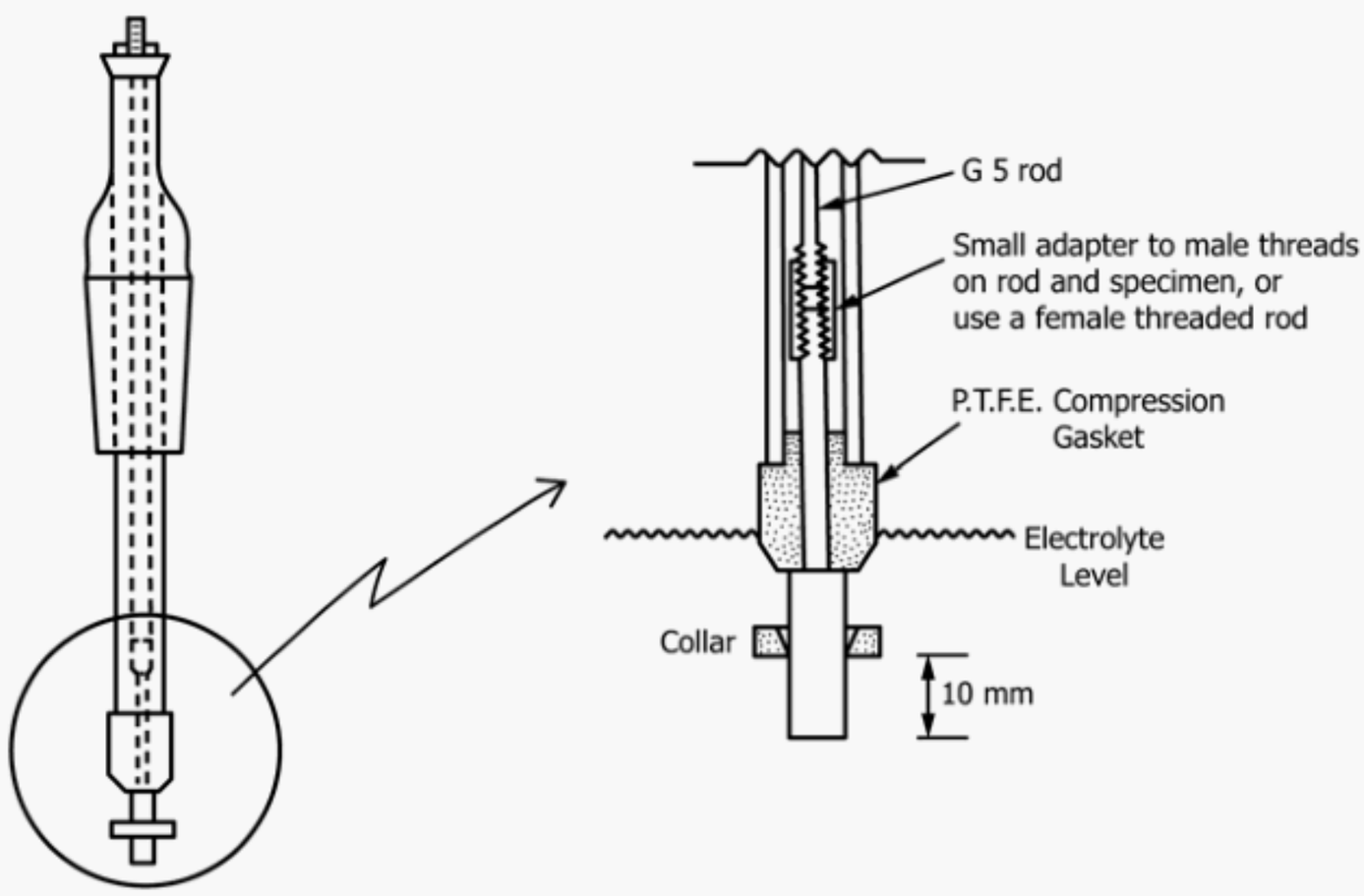

FIG. 2 Assembly into G5 Electrode Holder

switch from +0.8 V (SCE) to the preselected potential would result in a potential transient to values more active than the preselected potential. Such transients could lead to repassivation and to the incorrect assumption that the repassivation occurred at the preselected potential.

8.3 The current shall be recorded using a strip chart recorder with a minimum chart speed of 60 mm/min and a maximum current scale of 0 to 3 mA. The current will be recorded at +0.8 V (SCE) for a period that depends upon the reaction (see Fig. 3).

8.3.1 If localized corrosion is not stimulated in the initial 20 s, the polarizing currents will remain very small or decrease rapidly with time. Proceed to 8.4.

8.3.2 Stimulation of localized corrosion will be marked either by polarization currents that generally increase with time or by current densities that exceed 500 μA/cm^2 (for the suggested specimen size this would be equivalent to a current of approximately 2 mA).

8.3.2.1 If the current increases with time, after 20 s proceed to 8.5.

8.3.2.2 If at any time a current density of 500 μA/cm^2 is exceeded, proceed immediately to 8.5. In some instances, upon shifting to +0.8 V (SCE), the current density will almost instantaneously exceed 500 μA/cm^2. In such cases, proceed directly to 8.5 without pause.

8.4 If localized corrosion is not stimulated within the initial 20 s, continue at +0.8 V (SCE) for an additional 15 min; the chart speed may be reduced to a minimum of 5 mm/min after the initial 20 s. If localized corrosion is eventually stimulated, proceed to 8.5. If localized corrosion cannot be stimulated even in 15 min, the test is terminated, and the material is considered to have a very high resistance to localized corrosion in the test environment. Report the critical potential as > +0.8 V (SCE).

8.5 If localized corrosion is stimulated at +0.8 V (SCE), the potential is then returned as rapidly as possible (see Note 3) to E_1 (which is the first preselected potential) to determine if the specimen will repassivate or if localized corrosion will continue to propagate at the preselected potential.

8.6 If the pitted or creviced local regions repassivate at the preselected potential, the polarizing current will drop quickly to zero or to low values consistent with a passive surface condition (see Fig. 4(a) for examples). Monitor this current for 15 min.

8.6.1 During this 15 min, the chart speed may be reduced to a minimum of 5 mm/min.

8.6.2 Adjust the current scale to obtain satisfactory accuracy. The range used for monitoring the relatively large current during stimulation is almost certainly unsuitable for accurately monitoring the much smaller repassivation currents.

8.6.3 If the pitted or local regions do not repassivate at E_1, then the critical voltage shall be reported as E_1, with the notation that the specimen never repassivated following the initial stimulation. The test shall be terminated.

8.7 After ensuring repassivation at E_1 by observing low, decreasing (or constant) polarization currents for 15 min, repeat the stimulation step (8.2 and 8.3) at +0.8 V (SCE) and then change the potential as rapidly as possible (see Note 3) to the second preselected potential which should be the nearest 0.05-V increment more noble than E_1 (on the SCE scale). Repeat 8.6.

8.7.1 *Example*—If E_1 is any value in the range –0.100 to –0.051 V (SCE), then the second preselected potential would be –0.050 V (SCE).

8.8 The test consists of alternating between stimulation at +0.8 V (SCE) and returning to a preselected potential to see if repassivation occurs. After the second preselected potential, increase subsequent preselected potentials (that is, to more noble values) in increments of 0.05 V.

8.8.1 *Examples*—If E_1 were –0.090 V (SCE), the second preselected potential would be –0.050 V (SCE), the third preselected potential would be 0.000 V (SCE), the fourth +0.050 V (SCE), followed by +0.100 V (SCE), +0.150 V (SCE), and so forth.

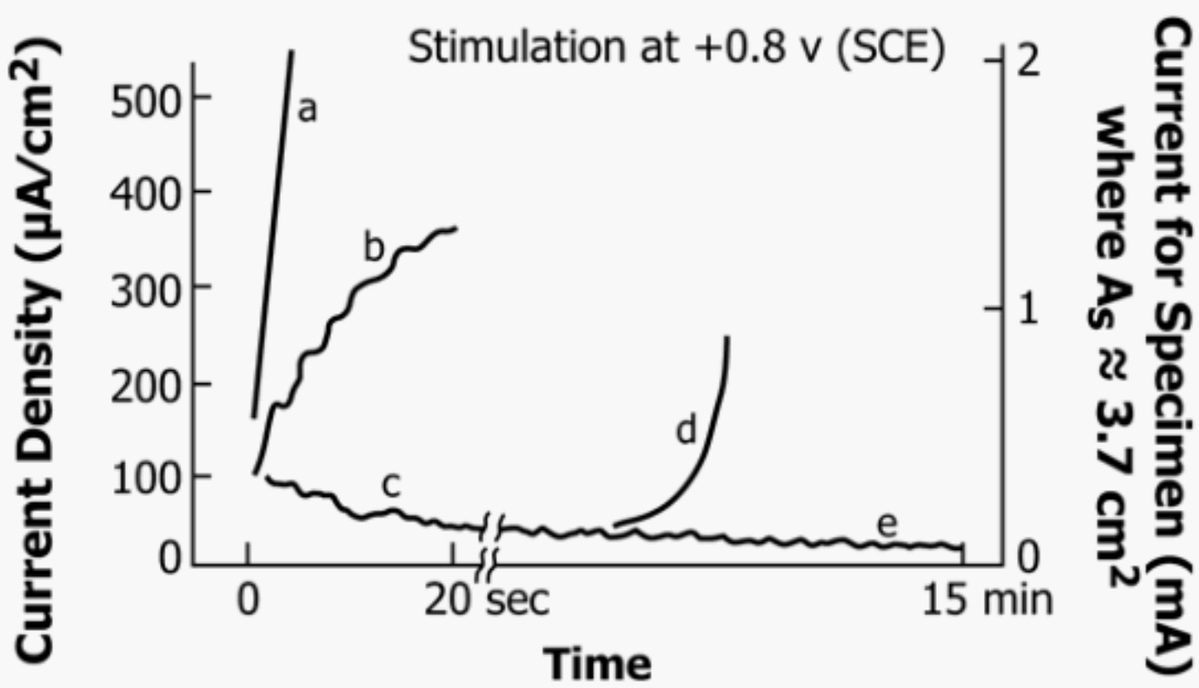

Note a—Current density instantly exceeds 500 μA/cm^2. Return immediately to preselected potential.
Note b—Current generally increases with time but does not ever exceed 500 μA/cm^2. Return to the preselected potential after 20 s.
Note c—Localized corrosion is not stimulated within the initial 20 s. Continue for an additional 15 min.
Note d—If localized corrosion is eventually stimulated, return to the preselected potential.
Note e—If localized corrosion cannot be stimulated even after the 15 min, the test is terminated.

FIG. 3 Stimulation of Localized Corrosion

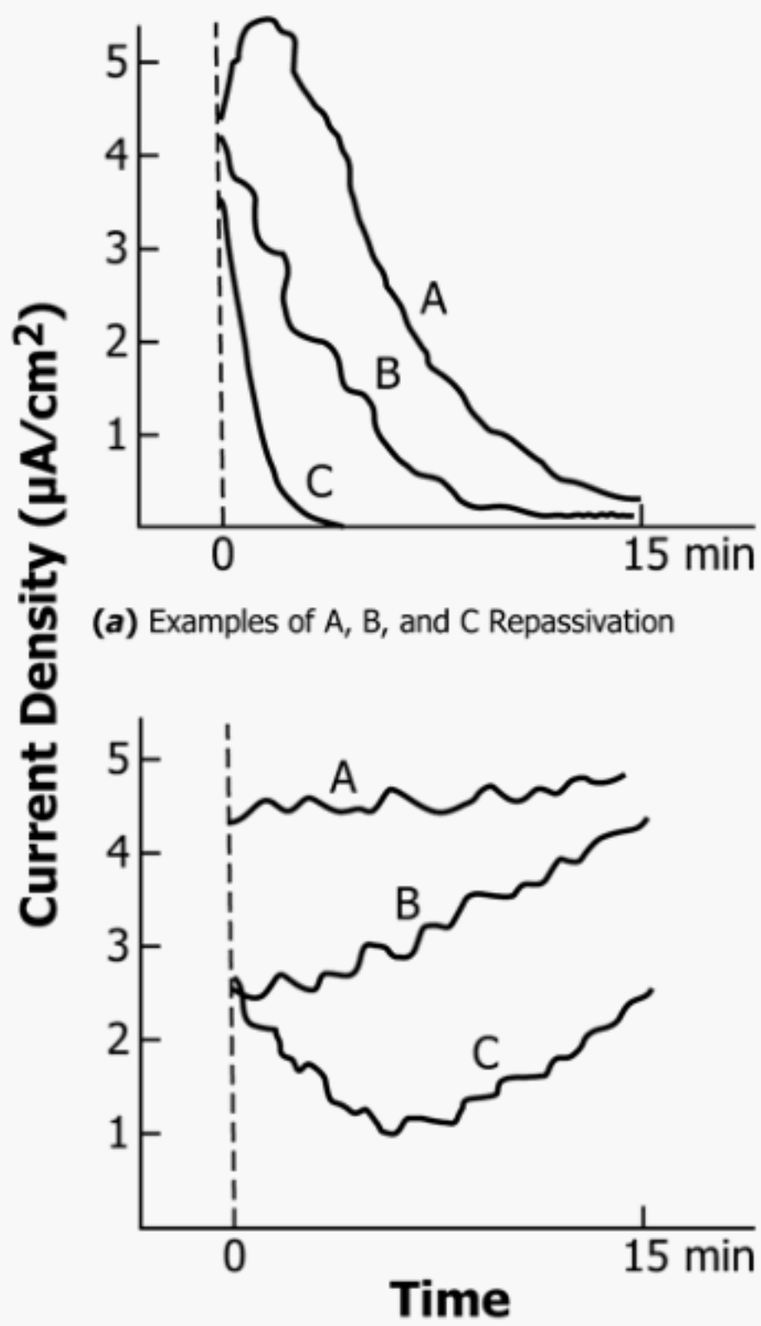

FIG. 4 Examples of Typical Current – Time Curves at a Preselected Potential

8.9 At some preselected potential, the localized corrosion may continue to propagate rather than repassivate, heralded by continuous increases or large fluctuations in current during the 15-min observation period (see Fig. 4(b) for example). At this point, terminate the test.

8.10 At whatever stage the test is terminated (8.4 or 8.9), remove the collar and holder and examine the specimen at 20× for evidence of pitting, crevice corrosion, or discoloration.

9. Report

9.1 The report shall include the following:

9.1.1 Alloy composition, product name, trademark, or similar markings that identify the specimen.

9.1.2 Any special treatments such as heat treatments, amount of hot or cold working, surface finish other than the standard 600-grit metallographic polish, or passivation treatments (chemicals, temperatures, times).

9.1.3 Total exposed surface area of the specimen before placement of the collar, A_T; the surface area under the collar, A_C; and the exposed surface area of the specimen after placement of the collar, A_S.

9.1.4 Initial corrosion potential.

9.1.5 Final corrosion potential, E_1, at the end of the first hour.

9.1.6 Critical potential for pitting (or crevice corrosion), that is, the most noble preselected potential at which pit (or crevice) surfaces still repassivate after the stimulation step.

9.1.7 Plot of polarizing current density (that is, polarizing current divided by A_S) versus time for the 15-min period at the preselected potentials both at and immediately above the critical potential (see Figs. 4 and 5). By convention, the current densities are reported in μA/cm^2.

9.1.8 Observations made during the microscopic examination including the type of localized corrosion that occurred (pitting in the exposed area, or crevice corrosion in the area under the collar), approximate size and spatial distribution of any pits, and appearance and approximate extent of any crevice corrosion or discoloration.

9.1.9 The pH both before and after the test.

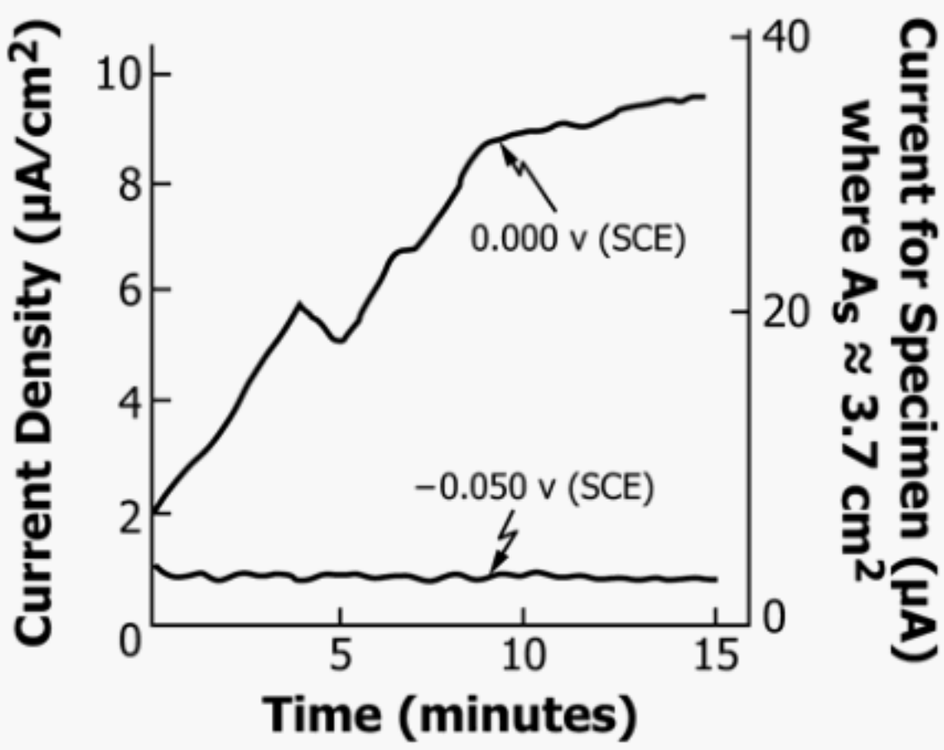

NOTE 1—Typical polarizing current densities during 15 min at (*a*) critical potential, –0.050 V (SCE), and (*b*) the next more noble step, 0.000 V (SCE), where repassivation no longer occurs. This data is from a specimen of 316 LVM stainless steel in an "as-received" (not yet passivated in accordance with Practice F86) condition.

FIG. 5 Typical Polarizing Current Densities

10. Keywords

10.1 crevice corrosion; passive metals; pitting corrosion; potentiostatic polarization measurements; surgical implant materials

APPENDIX

(Nonmandatory Information)

X1. RATIONALE FOR CORROSION SPECIFICATION[5]

X1.1 Corrosion of any metallic implant or device is undesirable for two reasons. First, the corrosion or degradation of the metal may make it structurally weaker or less able to function properly. Second, the resulting corrosion products may react unfavorably with the tissue immediately adjacent to the metal implant or even at distant sites in the body.

X1.2 Most candidate materials for modern implants cannot be differentiated or screened for corrosion by simple conventional immersion testing. For instance, if a candidate alloy is placed in a relevant solution such as blood, saltwater, saliva, or mild acid for ten years, less than 0.1 % weight change would occur during that entire period. Therefore, to screen candidate materials in a reasonable period of time, corrosion processes must be promoted or accelerated in some way. In this test method, electrochemical stimulation is used to accelerate the corrosion processes.

X1.3 In Reference Test Method G5, the electrochemical potential impressed upon a metallic specimen immersed in an acid solution is steadily increased until the protective oxide film on the metal surface (the "passive film") breaks down and localized corrosion ensues. This breakdown is monitored by a rather sudden increase in the current flowing in the solution. With this test method, the alloys are ranked in terms of the potential at which breakdown first occurs: the higher this potential, the more resistant the alloy is to passive film breakdown and to localized corrosion.

X1.4 It has been demonstrated[6] that slipping a polymeric ring over a small portion of a submerged cylindrical specimen can cause a concentrated attack in the creviced area between the metal and the ring. Within the crevice, oxygen may become depleted and aggressive species concentrate, leading to a more aggravated attack than would have occurred without the creviced region. Some materials are very susceptible to this particular attack mechanism, and large amounts of corrosion products may form under the ring while the remainder of the specimen may be relatively untouched.

X1.5 In this test method, instrumentation from Reference Test Method G5 is employed to obtain the desired potentials on the submerged specimen; however, there are several distinct differences between this test method and the method employed in Reference Test Method G5, as follows:

X1.5.1 Instead of mild acid, a phosphate-buffered saline solution is used; the latter solution more closely simulates fluids within the body. (Actual body fluids cannot presently be employed because their organic components tend to foul the immersed corrosion detection instruments.)

X1.5.2 A polymeric ring is placed on the specimen to create a crevice condition.

X1.5.3 This test method requires less ancillary equipment than Reference Test Method G5, so reducing capital costs, and potential inaccuracies in the interpretation of the results are avoided by eliminating the effects of incubation time for localized corrosion. A modified version of the method[2] is utilized in which the potential is first set at +0.800 V measured with reference to a saturated calomel electrode (SCE). At this very high overvoltage, localized breakdown and corrosion occurs immediately in many alloys. After this corrosion stimulation step, the overvoltage is dropped immediately to lower values to determine if the alloy can repair itself (repassivate) under these less severe conditions.

X1.6 Finally, it must be emphasized that even though this present document represents the results of combined efforts of both ASTM Committees F04 and G01, plus extensive round-robin testing with current implant metals, it is not intended as the sole technique for evaluation of implant materials. It tests primarily for resistance to certain forms of localized corrosion. It does not test for mechanical stability (ability of the metal and the protective surface oxide to withstand mechanical forces) nor for biocompatibility per se. There are currently active task forces that are formulating additional corrosion tests in such areas as corrosion fatigue, fretting corrosion, and biocompatibility.

[5] Committee F04 requires a rationale to accompany all standards. This rationale should be readable to lay consumers as well as technical experts.

[6] *Journal of Material Science*, Vol 7, 1972, p. 126.

ASTM International takes no position respecting the validity of any patent rights asserted in connection with any item mentioned in this standard. Users of this standard are expressly advised that determination of the validity of any such patent rights, and the risk of infringement of such rights, are entirely their own responsibility.

This standard is subject to revision at any time by the responsible technical committee and must be reviewed every five years and if not revised, either reapproved or withdrawn. Your comments are invited either for revision of this standard or for additional standards and should be addressed to ASTM International Headquarters. Your comments will receive careful consideration at a meeting of the responsible technical committee, which you may attend. If you feel that your comments have not received a fair hearing you should make your views known to the ASTM Committee on Standards, at the address shown below.

This standard is copyrighted by ASTM International, 100 Barr Harbor Drive, PO Box C700, West Conshohocken, PA 19428-2959, United States. Individual reprints (single or multiple copies) of this standard may be obtained by contacting ASTM at the above address or at 610-832-9585 (phone), 610-832-9555 (fax), or service@astm.org (e-mail); or through the ASTM website (www.astm.org). Permission rights to photocopy the standard may also be secured from the Copyright Clearance Center, 222 Rosewood Drive, Danvers, MA 01923, Tel: (978) 646-2600; http://www.copyright.com/