This international standard was developed in accordance with internationally recognized principles on standardization established in the Decision on Principles for the Development of International Standards, Guides and Recommendations issued by the World Trade Organization Technical Barriers to Trade (TBT) Committee.

Designation: F955 – 15 (Reapproved 2021)

Standard Test Method for Evaluating Heat Transfer Through Materials for Protective Clothing Upon Contact with Molten Substances[1]

This standard is issued under the fixed designation F955; the number immediately following the designation indicates the year of original adoption or, in the case of revision, the year of last revision. A number in parentheses indicates the year of last reapproval. A superscript epsilon (ε) indicates an editorial change since the last revision or reapproval.

1. Scope

1.1 This test method covers the evaluation of materials' thermal resistance to heat transfer when exposed to a molten substance pour.

1.1.1 This test method was validated using molten substances of aluminum, brass, and iron. The test shall be permitted to be adapted for use with other substances.

1.2 This test method is applicable to materials from which finished primary protective apparel articles are made.

1.3 This test method does not measure the flammability of materials, nor is it intended for use in evaluating materials exposed to any other thermal exposure.

1.4 Use this test method to measure and describe the properties of materials, products, or assemblies in response to molten substance pour under controlled laboratory conditions and shall not be used to describe or appraise the thermal hazard or fire risk of materials, products, or assemblies under actual conditions. However, it is acceptable to use results of this test as elements of a thermal risk assessment which takes into account all the factors that are pertinent to an assessment of the thermal hazard of a particular end use.

1.5 *This standard does not purport to address all of the safety concerns, if any, associated with its use. It is the responsibility of the user of this standard to establish appropriate safety, health, and environmental practices and determine the applicability of regulatory limitations prior to use.* Specific hazard statements are given in Section 8.

1.6 *This international standard was developed in accordance with internationally recognized principles on standardization established in the Decision on Principles for the Development of International Standards, Guides and Recommendations issued by the World Trade Organization Technical Barriers to Trade (TBT) Committee.*

2. Referenced Documents

2.1 *ASTM Standards:*[2]

D123 Terminology Relating to Textiles

E457 Test Method for Measuring Heat-Transfer Rate Using a Thermal Capacitance (Slug) Calorimeter

F1002 Performance Specification for Protective Clothing and Materials for Use by Workers Exposed to Specific Molten Substances and Related Thermal Hazards

F1494 Terminology Relating to Protective Clothing

3. Terminology

3.1 *Definitions of Terms Specific to This Standard:*

3.1.1 *break-open*—in testing thermal protective material, a response evidenced by the formation of a hole in the material which allows the molten substance to pass through the material.

3.1.2 *charring*—the formation of carbonaceous residue as the result of pyrolysis or incomplete combustion.

3.1.3 *dripping*—a material response evidenced by flowing of the polymer.

3.1.4 *embrittlement*—the formation of a brittle residue as the result of pyrolysis or incomplete combustion.

3.1.5 *heat flux*—the thermal intensity indicated by the amount of energy transmitted divided by area and time, W/m^2 (cal/cm^2 s).

3.1.6 *human tissue burn tolerance (heat tolerance)*—in the testing of thermal protective materials, the amount of thermal energy predicted to cause a second-degree burn injury in human tissue.

3.1.7 *ignition*—the initiation of combustion.

3.1.8 *melting*—a material response evidenced by softening of the polymer.

3.1.9 *primary protective clothing*—protective clothing designed to be worn for work activities during which significant exposure to molten substance splash, radiant heat, and flame is likely to occur.

[1] This test method is under the jurisdiction of ASTM Committee F23 on Personal Protective Clothing and Equipment and is the direct responsibility of Subcommittee F23.80 on Flame and Thermal.

Current edition approved Nov. 1, 2021. Published November 2021. Originally approved in 1985. Last previous edition approved in 2015 as F955 – 15. DOI: 10.1520/F0955-15R21.

[2] For referenced ASTM standards, visit the ASTM website, www.astm.org, or contact ASTM Customer Service at service@astm.org. For *Annual Book of ASTM Standards* volume information, refer to the standard's Document Summary page on the ASTM website.

Copyright © ASTM International, 100 Barr Harbor Drive, PO Box C700, West Conshohocken, PA 19428-2959. United States

Eqr{tkijv'd{'CUVO'Kpvgtpcvkqpcn'"cnn'tkijvu'tgugtxgf+='Htk'Fge'25'2;<5;<23'IOV'4243
Fqypnqcfgf'rtkpvgf'd{
Ig{k'Xwqpi'"Wpkxgtukv{'Qh'Knnkpqku'cv'Wtdcpc/Ejcorckip+'rwtuwcpv'vq'Nkegpug'Citggogpv/'Pq'hwtvjgt'tgrtqfwekqpu'cwvjqtk|gf0

3.1.9.1 *Discussion*—Primary protective clothing is used in work activities that include charging, tapping, and pouring, during which work is carried out in close proximity to molten substances and hot surfaces where contact with either is likely.

3.1.10 *response to molten substance pour*—in testing thermal protective material, the observed effect of molten substance contact on textile properties or deterioration of the material.

3.1.11 *shrinkage*—a decrease in one or more dimensions of an object or material.

3.1.12 *thermal end point*—in the testing of thermal protective materials, the point where the copper slug calorimeter sensor response (heat energy measured) intersects with a predicted skin burn injury model.

3.2 For definitions of other textile terms used in this test method, refer to Terminology D123.

4. Summary of Test Method

4.1 A material specimen is mounted on a vertical incline and is exposed to a molten substance pour of prescribed minimum temperature, volume, pour rate, and vertical height.

4.2 The amount of heat energy that is transmitted through the test specimen during and after the molten substance exposure is measured using two copper slug calorimeters. The heat transport response is assessed versus the Stoll curve, an approximate human tissue tolerance predictive model that projects the onset of a second-degree skin burn injury as manifested by a blister (see 12.2).

4.3 A specific set of subjective evaluations is performed on the test specimen response to the molten substance exposure using a standardized rating scale for appraisal (found in Annex A1).

5. Significance and Use

5.1 Workers who have the potential to be exposed to molten metal contact shall be permitted to wear protective clothing using materials that have been evaluated for heat transfer using this test method.

5.2 This test method rates materials that are intended for primary protective clothing against potential molten substance contact for their thermal insulating properties and their reaction to the test exposure.

5.3 The protective performance, as determined by this test method, will relate to the actual end-use performance only to the degree that the end-use exposure is identical to the exposure used in the test method.

5.4 Visual inspection of the specimen subjectively notes the material's resistance to molten substance contact.

6. Apparatus

6.1 The test apparatus consists of four major components as follows:

6.1.1 An inclined specimen mounting and exposure board with two copper slug calorimeter thermal sensors and supports,

6.1.2 A pouring crucible and pouring mechanism,

6.1.3 A furnace for melting the test metal, and

6.1.4 Instruments for measuring test conditions and test results.

6.2 *Sensor Construction:*

6.2.1 Each copper slug calorimeter shall be 18 ± 1 g, 40 mm diameter and 1.6 mm thick, and shall be constructed from electrical grade copper with a single 30 gage, iron/constantan thermocouple wire and shall be installed as identified in Fig. 1.

6.2.2 The exposed surface of each copper slug calorimeter shall be painted with a thin coating of a flat black high-temperature spray paint with an emissivity of 0.9. The painted

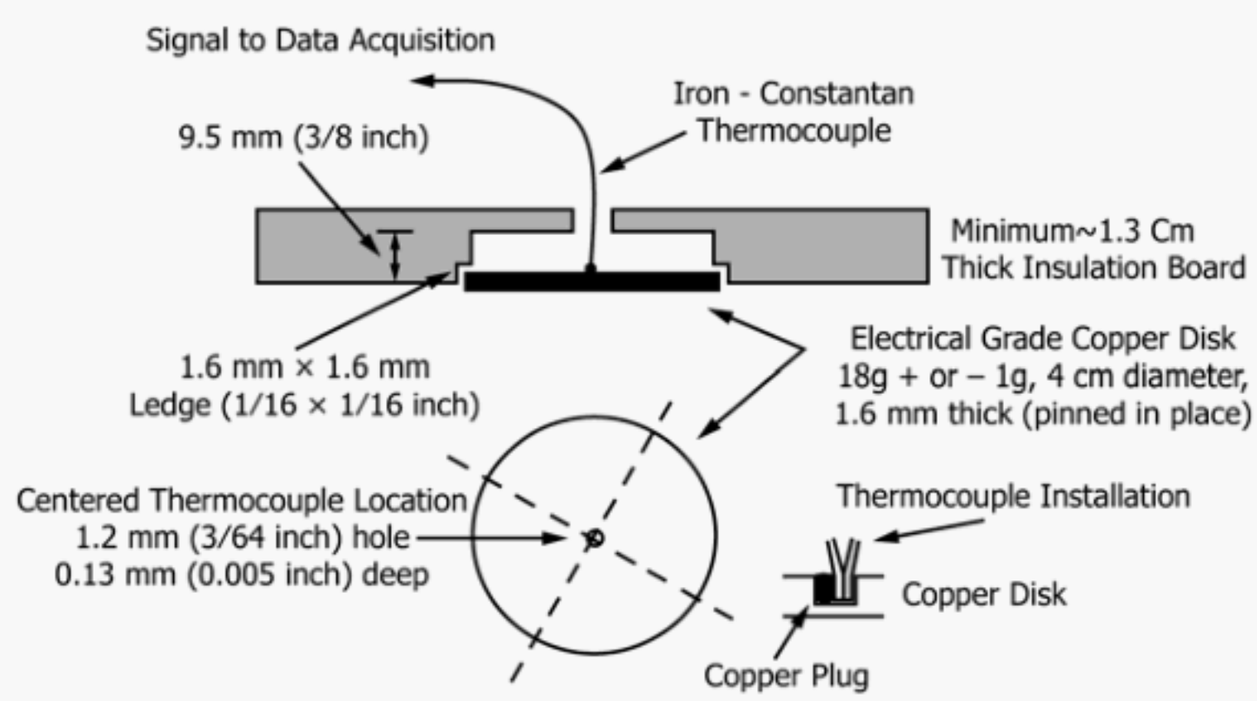

NOTE 1—Sensor Construction—Place a straight, bare tip thermocouple wire into the hole located in the center of the copper disk. Place a short "copper plug" into the center hole with the thermocouple junction by clipping a section of bare copper wire of appropriate diameter that, when combined with the thermocouple wire, will just fit into the center hole. Use a center punch to mechanically wedge the wire bundle into place. Peen around the hole to further secure the thermocouple into the copper disk. Take care not to cut the thermocouple wire during this assembly process. Check the electrical continuity and thermal response prior to using the completed copper slug calorimeter.

FIG. 1 Sensor Construction

Eqr{tkijv"d{"CUVO"Kpvjn"*cm"tkijvu"tgugtxgf+="Htk"Fge"25"2;<5;<23"IOV"4243
Fqypnqcfgf!rtkpvgf"d{
Ig{k"Xwqpi"*Wpkxgtukv{"Qh"Knnkpqku"cv"Wtdcpc/Ejcorckip+"rwtuwcpv"vq"Nkegpug"Citggogpv!"Pq"hwtvjgt"tgrtqfwevkqpu"cwvjqtk|gf!

sensor shall be dried before use and present a uniformly applied coating (no visible thick spots or surface irregularities). Note that an external heat source, for example, an external heat lamp, has been used to completely drive off any remaining organic carriers on a freshly painted surface.

6.3 *Specimen/Sensor Board:*

6.3.1 The specimen/sensor board shall be nominally 250 mm by 406 mm [10 in. by 16 in.] and fabricated of a flame and heat resistant material with a thermal conductivity value of ≤0.15 W/m·K, high temperature stability, and resistance to thermal shock. The board shall be nominally 13 mm [0.5 in.] or greater in thickness.

6.3.2 The copper slug calorimeters shall be located in the centerline of the sensor board and mounted as shown in Fig. 1. The calorimeters shall be located 101 mm and 203 mm [4 in. and 8 in.] respectively, from the top of the board to the calorimeter centers as indicated in Fig. 2.

6.3.3 An attachment method shall be provided that affixes the test specimen to the board such that it covers both sensors and extends at least 25 mm [1 in.] beyond all edges.

6.3.4 The sensor board shall be inclined at an angle of 70° from horizontal.

6.3.5 The sensor board shall be located so that it meets the pour geometry illustrated in Fig. 2, where the molten substance is introduced at the centerline of the board.

6.4 *Pouring Crucible*—The pouring crucible shall be suitable for the substance being poured and for handling temperatures up to at least 56 °C [100 °F] above the pouring temperature. Crucible sizes appropriate for specific substances are shown in Table 1. The crucible shall be attached to a tilting mechanism capable of turning the ladle at the rate of one revolution per 4.7 ± 0.2 s. The crucible shall be pivoted at a point 25 mm [1 in.] below the top of the crucible on the vertical. When tilted, the tilted action shall be stopped mechanically after a rotation of 10 ± 5° from the vertical (Fig. 2). See also Annex A2.

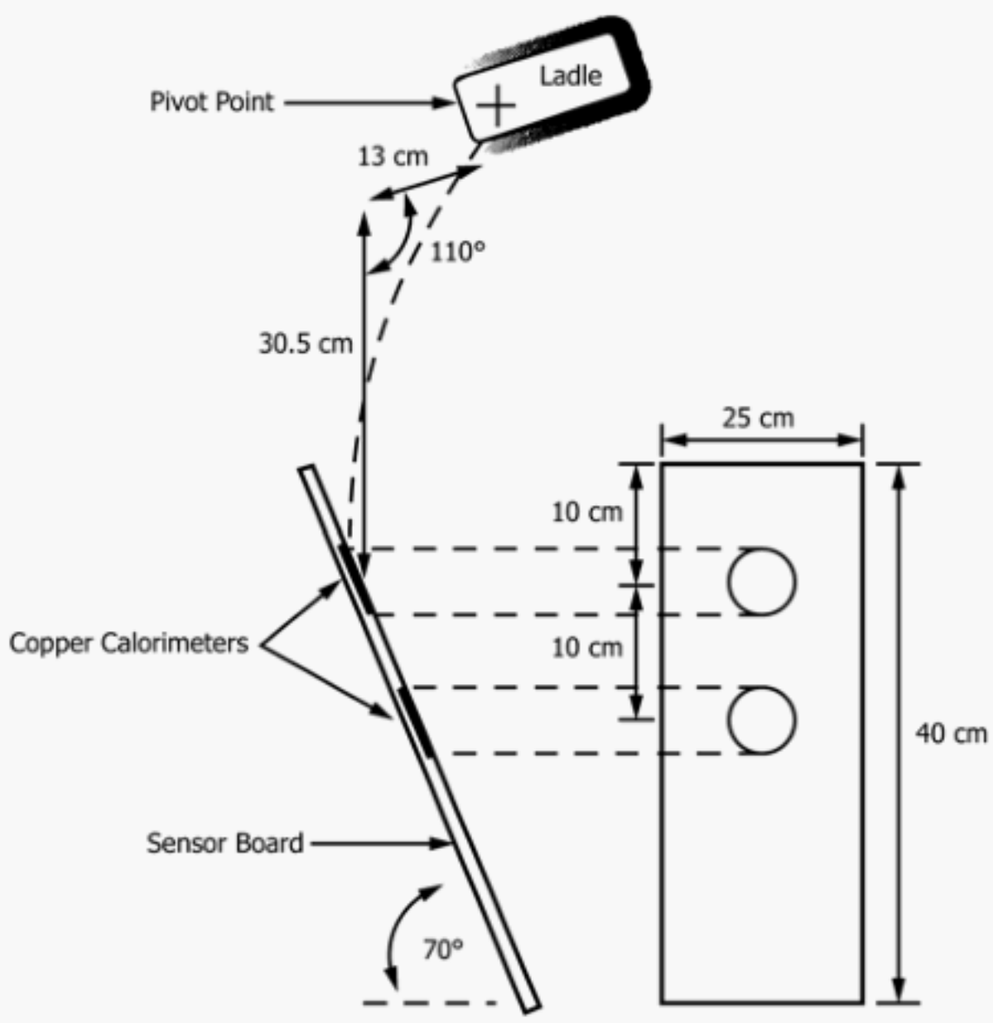

FIG. 2 Schematic of Test Apparatus

6.5 *Furnace*—A suitable furnace for melting and heating the test substance is needed. The furnace and lining must be of a type that the chemistry of the substance is not changed during contact with the furnace nor throughout the term of the test series.

6.6 Pouring height shall be 305 mm [12 in.] (see Fig. 2).

6.7 *Data Acquisition System*—The system shall be capable of recording the calorimeter outputs as required by the test.

6.7.1 The temperature data (calorimeter outputs) shall be acquired at a minimum sampling rate of four samples per second per calorimeter. The acquisition system shall be able to record temperatures to 150 °C [300 °F], have at least a resolution of 0.1 °C [0.2 °F], and measuring accuracy of ±0.75 °C [±1.4 °F].

7. Materials

7.1 Description of standard substances for test purposes is included in Table 1.

8. Hazards

8.1 Perform the test in a ventilated area to carry away combustion products, smoke, and fumes. Care shall be exercised in handling the hot substance. A full fire extinguisher, preferably of the carbon dioxide type, shall be readily available. Use normal safety practices for the handling of the molten substance and potentially flammable materials. Place a catch pan filled with dry sand under the assembly. *Extreme care shall be taken to prevent contact between the molten substance and water because explosive quantities of steam can result.*

8.2 The sensor board and calorimeter assembly become heated during prolonged testing. Use protective gloves when handling these hot objects and during the pour.

9. Sampling and Specimen Preparation

9.1 *Lot Size*—For acceptance sampling purposes, a lot is defined as 4572 m [5000 yd] or a single shipment of a single style of material, whichever is smaller. A lot shall be permitted to constitute all or part of a single customer order.

9.2 *Lot Sample*—As a lot sample, take a 2 m [2.2 yd] full-width piece of material from both the beginning and end of the lot.

9.3 *Test Specimens*—Cut and identify three test specimens from each sample. Make each test specimen at least 305 ± 2 mm by 460 ± 2 mm [12 ± 1/16 by 18 ± 1/16 in.]. Do not cut samples closer than 10 % of the material width from the edge and arrange the specimens across the sample swatch so as to get as representative a sampling as possible.

9.4 *Sensor Care:*

9.4.1 *Initial Temperature*—Cool the sensor after a pour exposure with a jet of air to approximately 21 °C [70 °F] just prior to positioning the test specimen.

9.4.2 *Surface Reconditioning*—Wipe the sensor face with a nonabrasive material immediately after each run, while it is hot, to remove any decomposition products which condense, since these could be a source of error. If there is a deposit on the surface of the sensor that appears to be thicker than a thin

Eqr{tkijv"d{"CUVO"Kpvjtf"*cnf"tkijvu"tgugtxgf+="Htk"Fge"25"2;<5;<23"IOV"4243
Fqypnqcfgf!rtkpvgf"d{
Ig{k"Xwqpi"*Wpkxgtukv{"Qh"Knnkpqku"cv"Wtdcpc/Ejcorckip+"rwtuwcpv"vq"Nkegpug"Citggogpv/"Pq"hwtvjgt"tgrtqfwevkqpu"cwvjqtk|gf0

TABLE 1 Test Parameters[A]

NOTE 1—When this test method is used for substances other than below, use a pour temperature equal to use temperature or sufficiently above the melting point to give reproducible pouring characteristics.

	Substance	Pour Temperature (min)	Weight of Test Substance	Substance Specification
A	Iron	2800 °F [1538 °C]	2.2 lb [1000 g]	Eutectic iron[B]
B	Aluminum	1400 °F [760 °C]	2.2 lb [1000 g]	Alloy 1100
C	Brass	2100 °F [1149 °C]	2.2 lb [1000 g]	Alloy 875[C]

[A] See Annex A3.

[B] Carbon equivalent = 4.3 ± 0.15 %. Carbon equivalent = % $C + \frac{Si}{4} + \frac{P}{2}$ (approximately 2 % Si).

[C] 82/14/4 %, Cu/Zn/Sn.

layer of paint, or is irregular, the sensor surface requires reconditioning. Carefully clean the cooled sensor with acetone or petroleum solvent, making certain there is no ignition source nearby. Repaint the surface, if bare copper is showing, with a thin layer of flat black spray paint as identified in 6.2.2 above.

10. Procedure

10.1 *Specimen Mounting*—A piece of the test material, prepared in accordance with 9.3, against the sensor board with the sample material hung over the sensor board, centered horizontally over the calorimeters with the top of the material about 130 mm [5 in.] above the top of the upper sensor. Attach the test material to the sensor board by an appropriate means.

10.1.1 *Multiple Layer Samples*—For the standard tests to measure the protective property of multiple layer samples, place the surface of the material to be used as the outside of the garment facing out. Place the subsequent layer(s) underneath in the order used in wearing with the surface to be worn toward the skin facing the calorimeters.

10.2 *Pour Method*—Molten substance of sufficient quantity for the test series is first heated in a furnace. When the sample is mounted and all is in readiness, the test substance shall be brought to about 56 °C [100 °F] above the pour temperature. Make molten substance temperature measurements with an appropriate device such as an optical pyrometer or other heat measuring device with an accuracy of at least ±14 °C [±25 °F]. Use a preheated crucible appropriate to the substance being used, as shown in Table 1. Put a quantity of substance, ±10 % of the weight shown in Table 1 in the test crucible, and then transfer it into the pouring rig. Align the assembly holding the pouring crucible so that the main part of the molten substance stream impacts on the material specimen directly above the center of the top calorimeter.

10.2.1 The data acquisition system is started several seconds before the actual molten material pour is initiated. This establishes the average starting copper slug calorimeter temperatures for the heat energy determination.

10.2.2 When the temperature of the molten substance drops to the appropriate pour temperature, tilt the crucible and pour the substance onto the material specimen set on the inclined sensor panel board for the test. (Take extreme care to avoid being splashed by the hot substance.) Continue the exposure for 45 s then stop data acquisition.

10.2.3 Observe the specimen during and immediately after the pour.

10.2.4 Expose two specimens for each sample tested.

10.2.5 If the temperature rise of the two tests differs by more than 10 %, test a third specimen and average the results of the three tests. Note any explainable reason for the variation.

10.2.6 *Post-Test Inspection*—After the pour, inspect the ladle to be sure that all of the test substance has been poured out of the crucible and onto the test material. If visible substance remains in the pouring crucible after the test, remove and weigh the material to ensure that the amount poured is within the tolerances.

10.3 *Direct Pour Method*—As an alternative to the procedure in 10.2, place a quantity of substance ±10 % of the weight shown in Table 1 in a crucible in an induction furnace. Mount this assembly in the pouring assembly. Bring the substance to the pouring temperature as indicated in 10.2 and pour directly from the furnace and crucible onto the test material.

10.3.1 Follow post-test inspection as in 10.2.6.

11. Calculation of Results

11.1 *Sensor Response*—The response of each calorimeter is determined shortly before, during, and for 45 s after a pour has been initiated.

11.1.1 Once a pour initiation point is determined, the temperature data collected from the calorimeters before and up to the initiation point are averaged to obtain a starting calorimeter temperature, $T_{initial}$ (°C), for each respective sensor.

11.1.2 The heat capacity of each copper slug at the initial temperature is calculated using:

$$C_p = \frac{4.1868 \times (A + B \times t + C \times t^2 + D \times t^3 + E/t^2)}{63.546\ g/mol} \quad (1)$$

where:

t = (measured temperature °C + 273.15) / 1000
A = 4.237312
B = 6.715751
C = –7.46962
D = 3.339491
E = 0.016398

11.1.3 The heat capacity of copper in J/g°C at any temperature between 289 K and 1358 K is determined by means of Eq 1 (Shomate Equation with coefficients from NIST).

11.1.4 The total incident energy versus time is determined and plotted for both panel heat energy sensors.

11.1.4.1 The copper slug heat capacity is determined at each time step. This is done by calculating an average heat capacity

Eqr{tkijv'd{"CUVO"Kpvjrnr"cnnr"tkijvu"tgugtxgf+="Htk"Fge"25"2;<5;<23"IOV"4243
Fqypnqcfgf!rtkpvgf"d{
Ig{k"Xwqpi""Wpkxgtukv{"Qh"Knnkpqku"cv"Wtdcpc/Ejcorckip+"rwtuwcpv"vq"Nkegpug"Citggogpv"Pq"hwtvjgt"tgrtqfwekqpu"cwvjqtk|gf

for each sensor from the initial heat capacity, determined in 11.1.2, and the time step measured temperature.

$$\bar{C}_p = \frac{C_p @ Temp_{initial} + C_p @ Temp_{final}}{2} \quad (2)$$

11.1.4.2 The total incident energy at each time step is determined in J/cm^2 by using the relationship:

$$Total\ Heat\ Energy,\ Q = \frac{mass \times \bar{C}_p \times (Temp_{final} - Temp_{initial})}{area} \quad (3)$$

where:

Q = heat energy in J/cm^2,
$mass$ = mass of the copper disk/slug (g),
$\bar{C}_p$ = average heat capacity of copper during the temperature rise (J/g°C),
$temp_{final}$ = final temperature of copper disk/slug at $time_{final}$ (°C),
$temp_{initial}$ = initial temperature of copper disk/slug at $time_{initial}$ (°C), and
$area$ = area of the exposed copper disk/slug (cm^2).

11.1.4.3 For a copper disk/slug that has a mass of 18.0 g and exposed area of 12.57 cm^2, the determination of heat energy reduces to:

$$Total\ Heat\ Energy,\ Q = 1.432 \times \bar{C}_p \times (Temp_{final} - Temp_{initial}) \quad (4)$$

(1) If a copper disk/slug with a different mass and or exposed area is used, the constant factor in Eq 4 above must be adjusted correspondingly. If required, the value in cal/cm^2 can be determined by multiplying the total heat energy in Eq 4 by the conversion factor 1/4.1868 cal/J.

11.2 *Predicted Second-Degree Skin Burn Injury Determination (Stoll Curve Comparison)*—The time-dependent measured heat energy for each copper slug calorimeter monitor sensor, determined in 11.1.4.3 above, is compared to an empirical human predicted second-degree skin burn injury model,[3] commonly referred to as the "Stoll Curve" or "Stoll Response."

$$Stoll\ Response,\ J/cm^2 = 5.0204 \times t_j^{0.2901} \quad (5)$$

NOTE 1—The "Stoll Response" can also be expressed in cal/cm^2 by means of:

$$Stoll\ Response,\ cal/cm^2 = 1.1991 \times t_j^{0.2901} \quad (6)$$

[3] Derived from: Stoll, A. M. and Chianta, M. A., "Method and Rating System for Evaluations of Thermal Protection," *Aerospace Medicine*, Vol 40, 1969, pp. 1232–1238 and Stoll, A. M. and Chianta, M. A., "Heat Transfer Through Fabrics as Related to Thermal Injury," *Transactions–New York Academy of Sciences*, Vol 33, No. 7, Nov. 1971, pp. 649–670.

12. Report

12.1 The description of the specimen including but not limited to the number of material layers in the specimen, the sequence of the layers as they would be worn starting from the outermost layer, the type of material in each layer, the area density in g/m^2 [oz/yd^2] of each layer of the material, the color of each layer of the material, the preconditioning in terms of laundering, dry cleaning or ambient conditioning, or combinations thereof, for each specimen prior to testing.

12.2 The length of time it would take, under test conditions, to produce a second-degree burn in accordance with the Stoll curve from the heat transferred through the test material (from 11.2). (No blister is one possible value.) All values from the calorimeters during the entire 45-s acquisition period shall be used (worst-case interpretation).

12.3 The temperature rise in Celsius degrees during the 30 s of exposure.

12.4 Physical damage to test material.

12.5 Adhesions, flaming, and so forth, observed during test.

12.6 *Visual Response of Material Substance to Molten Substance Contact*—After the exposed specimen has cooled, carefully remove it from the sensor board and observe the effect of the exposure. Describe this by one or more of the following terms which are defined in 3.1.1 – 3.1.5 and 3.1.7 – 3.1.11: break-open, charring, dripping, embrittlement, ignition, melting, shrinkage, and substance adhesions to test material, such as, number of adhesions, size of adhesions, and location in relation to sensor disc. Sticking, charring, shrinkage, and break-open shall be rated on a 1 through 5 scale as shown in Annex A1.

13. Precision and Bias

13.1 *Precision*—The precision of this test method was determined in a series of laboratory tests conducted on referenced fabrics and a detailed summary has been placed on file with ASTM headquarters.[4]

13.2 *Bias*—No justifiable statement can be made on the bias of this test method for evaluating heat transfer through materials, since the true values of heat transfer cannot be established by an acceptable referee method.

[4] Supporting data have been filed at ASTM International Headquarters and may be obtained by requesting Research Report RR:F23-1000. Contact ASTM Customer Service at service@astm.org.

Eqr{tkijv"d{"CUVO"Kpvjrf"cnrf"tkijvu"tgugtxgf+="Htk"Fge"25"2;<5;<23"IOV"4243
Fqypnqcfgf!rtkpvgf"d{
Ig{k"Xwqpi""Wpkxgtukv{"Qh"Knnkpqku"cv"Wtdcpc/Ejcorckip+"rwtuwcpv"vq"Nkegpug"Citggogpv0"Pq"hwtvjgt"tgrtqfwevkqpu"cwvjqtk|gf0

for each sensor from the initial heat capacity, determined in 11.1.2, and the time step measured temperature.

$$\bar{C}_p = \frac{C_p @ Temp_{initial} + C_p @ Temp_{final}}{2} \quad (2)$$

11.1.4.2 The total incident energy at each time step is determined in J/cm^2 by using the relationship:

$$Total\ Heat\ Energy,\ Q = \frac{mass \times \bar{C}_p \times (Temp_{final} - Temp_{initial})}{area} \quad (3)$$

where:

Q = heat energy in J/cm^2,
$mass$ = mass of the copper disk/slug (g),
$\bar{C}_p$ = average heat capacity of copper during the temperature rise (J/g°C),
$temp_{final}$ = final temperature of copper disk/slug at $time_{final}$ (°C),
$temp_{initial}$ = initial temperature of copper disk/slug at $time_{initial}$ (°C), and
$area$ = area of the exposed copper disk/slug (cm^2).

11.1.4.3 For a copper disk/slug that has a mass of 18.0 g and exposed area of 12.57 cm^2, the determination of heat energy reduces to:

$$Total\ Heat\ Energy,\ Q = 1.432 \times \bar{C}_p \times (Temp_{final} - Temp_{initial}) \quad (4)$$

(1) If a copper disk/slug with a different mass and or exposed area is used, the constant factor in Eq 4 above must be adjusted correspondingly. If required, the value in cal/cm^2 can be determined by multiplying the total heat energy in Eq 4 by the conversion factor 1/4.1868 cal/J.

11.2 *Predicted Second-Degree Skin Burn Injury Determination (Stoll Curve Comparison)*—The time-dependent measured heat energy for each copper slug calorimeter monitor sensor, determined in 11.1.4.3 above, is compared to an empirical human predicted second-degree skin burn injury model,[3] commonly referred to as the "Stoll Curve" or "Stoll Response."

$$Stoll\ Response,\ J/cm^2 = 5.0204 \times t_j^{0.2901} \quad (5)$$

NOTE 1—The "Stoll Response" can also be expressed in cal/cm^2 by means of:

$$Stoll\ Response,\ cal/cm^2 = 1.1991 \times t_j^{0.2901} \quad (6)$$

[3] Derived from: Stoll, A. M. and Chianta, M. A., "Method and Rating System for Evaluations of Thermal Protection," *Aerospace Medicine*, Vol 40, 1969, pp. 1232–1238 and Stoll, A. M. and Chianta, M. A., "Heat Transfer Through Fabrics as Related to Thermal Injury," *Transactions–New York Academy of Sciences*, Vol 33, No. 7, Nov. 1971, pp. 649–670.

12. Report

12.1 The description of the specimen including but not limited to the number of material layers in the specimen, the sequence of the layers as they would be worn starting from the outermost layer, the type of material in each layer, the area density in g/m^2 [oz/yd^2] of each layer of the material, the color of each layer of the material, the preconditioning in terms of laundering, dry cleaning or ambient conditioning, or combinations thereof, for each specimen prior to testing.

12.2 The length of time it would take, under test conditions, to produce a second-degree burn in accordance with the Stoll curve from the heat transferred through the test material (from 11.2). (No blister is one possible value.) All values from the calorimeters during the entire 45-s acquisition period shall be used (worst-case interpretation).

12.3 The temperature rise in Celsius degrees during the 30 s of exposure.

12.4 Physical damage to test material.

12.5 Adhesions, flaming, and so forth, observed during test.

12.6 *Visual Response of Material Substance to Molten Substance Contact*—After the exposed specimen has cooled, carefully remove it from the sensor board and observe the effect of the exposure. Describe this by one or more of the following terms which are defined in 3.1.1 – 3.1.5 and 3.1.7 – 3.1.11: break-open, charring, dripping, embrittlement, ignition, melting, shrinkage, and substance adhesions to test material, such as, number of adhesions, size of adhesions, and location in relation to sensor disc. Sticking, charring, shrinkage, and break-open shall be rated on a 1 through 5 scale as shown in Annex A1.

13. Precision and Bias

13.1 *Precision*—The precision of this test method was determined in a series of laboratory tests conducted on referenced fabrics and a detailed summary has been placed on file with ASTM headquarters.[4]

13.2 *Bias*—No justifiable statement can be made on the bias of this test method for evaluating heat transfer through materials, since the true values of heat transfer cannot be established by an acceptable referee method.

[4] Supporting data have been filed at ASTM International Headquarters and may be obtained by requesting Research Report RR:F23-1000. Contact ASTM Customer Service at service@astm.org.

Eqr{tkijv"d{"CUVO"Kpvjrf"cnrf"tkijvu"tgugtxgf+="Htk"Fge"25"2;<5;<23"IOV"4243
Fqypnqcfgf!rtkpvgf"d{
Ig{k"Xwqpi""Wpkxgtukv{"Qh"Knnkpqku"cv"Wtdcpc/Ejcorckip+"rwtuwcpv"vq"Nkegpug"Citggogpv0"Pq"hwtvjgt"tgrtqfwevkqpu"cwvjqtk|gf0

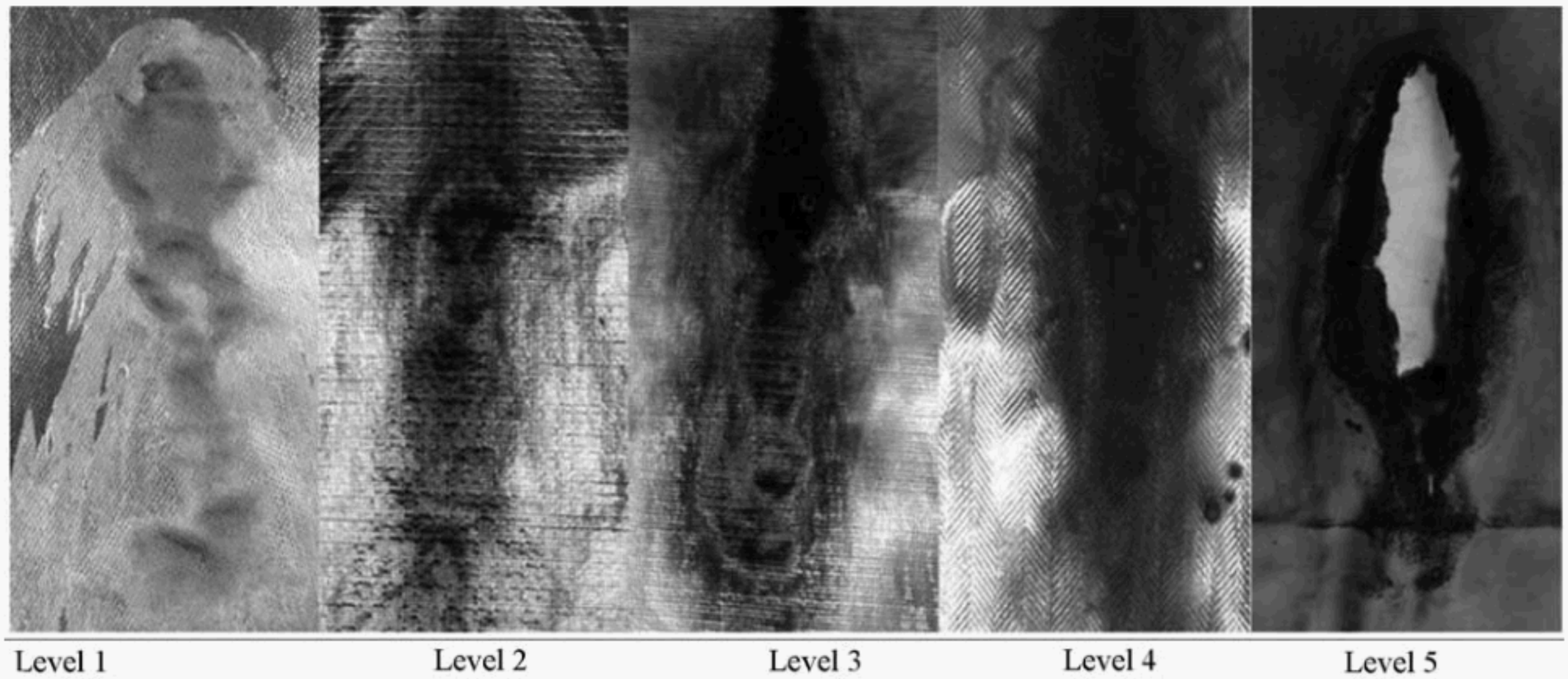

FIG. A1.2 Rating Photos for Charring

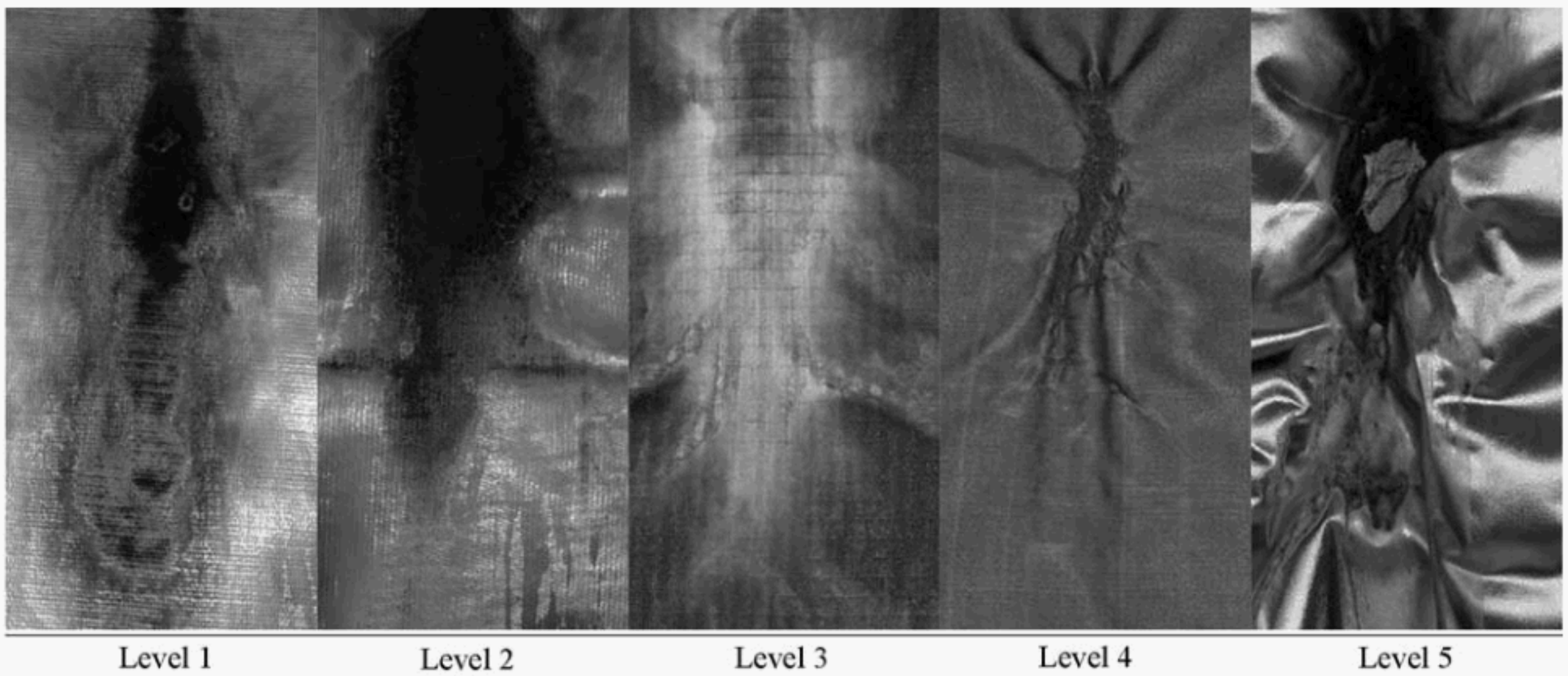

FIG. A1.3 Rating Photos for Shrinkage

Eqr{tkijv"d{"CUVO"Kpvjt"*cnt"tkijvu"tgugtxgf+="Htk"Fge"25"2;<5;<23"IOV"4243
Fqypnqcfgf!rtkpvgf"d{
Ig{k"Xwqpi"*Wpkxgtukv{"Qh"Knnkpqku"cv"Wtdcpc/Ejcorckip+"rwtuwcpv"vq"Nkegpug"Citggogpv0"Pq"hwtvjgt"tgrtqfwevkqpu"cwvjqtk|gf0

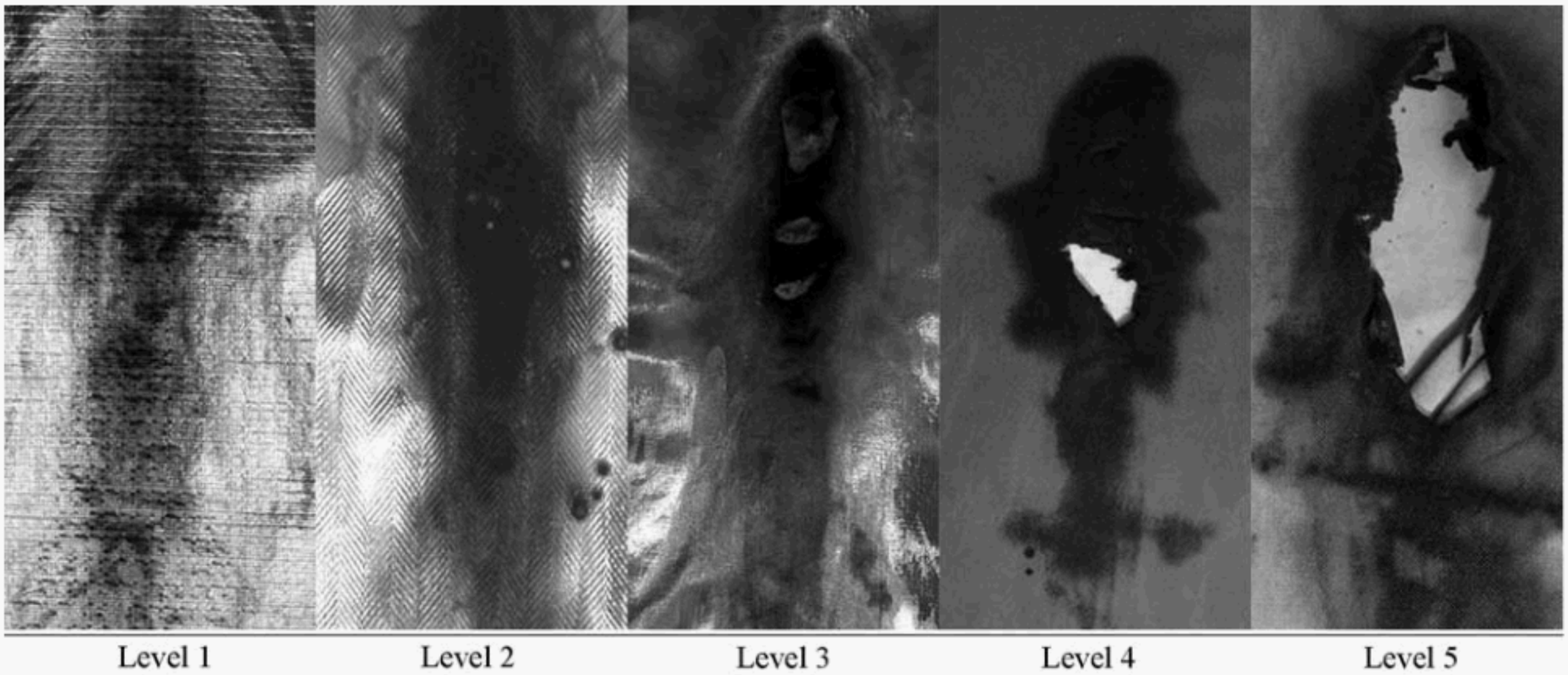

FIG. A1.4 Rating Photos for Break-Open

A2. CRUCIBLE TILT RATE

A2.1 The crucible tilt rate of one revolution in 4.7 ± 0.2 s is relatively slow. The low tilt rate results in a stream of metal that hits the calorimeter area as a moving *line* of metal. The total splash interval is about 1 s, which produces a reasonably severe impact event, but not all of the metal actually hits the calorimeter because the impact point moves as the crucible rotates.

A3. CRUCIBLE PARAMETERS

A3.1 The P-5 crucible has been used successfully for this work. The P-5 is available from American Refractories and Crucible Corp., P.O. Box 338, North Haven, CT 06473. A crucible filled to ⅓ to ½ level contains 1 kg of iron.

ASTM International takes no position respecting the validity of any patent rights asserted in connection with any item mentioned in this standard. Users of this standard are expressly advised that determination of the validity of any such patent rights, and the risk of infringement of such rights, are entirely their own responsibility.

This standard is subject to revision at any time by the responsible technical committee and must be reviewed every five years and if not revised, either reapproved or withdrawn. Your comments are invited either for revision of this standard or for additional standards and should be addressed to ASTM International Headquarters. Your comments will receive careful consideration at a meeting of the responsible technical committee, which you may attend. If you feel that your comments have not received a fair hearing you should make your views known to the ASTM Committee on Standards, at the address shown below.

This standard is copyrighted by ASTM International, 100 Barr Harbor Drive, PO Box C700, West Conshohocken, PA 19428-2959, United States. Individual reprints (single or multiple copies) of this standard may be obtained by contacting ASTM at the above address or at 610-832-9585 (phone), 610-832-9555 (fax), or service@astm.org (e-mail); or through the ASTM website (www.astm.org). Permission rights to photocopy the standard may also be secured from the Copyright Clearance Center, 222 Rosewood Drive, Danvers, MA 01923, Tel: (978) 646-2600; http://www.copyright.com/

Eqr{tkijv"d{"CUVO"Kpvjrnf"cnnf"tkijvu"tgugtxgf+="Htk"Fge"25"2;<5;<23"IOV"4243
Fqypnqcfgf!rtkpvgf"d{
Ig{k"Xwqpi""Wpkxgtukv{"Qh"Knnkpqku"cv"Wtdcpc/Ejcorckip+"rwtuwcpv"vq"Nkegpug"Citggogpv!"Pq"hwtvjgt"tgrtqfwevkqpu"cwvjqtk|gf!