This international standard was developed in accordance with internationally recognized principles on standardization established in the Decision on Principles for the Development of International Standards, Guides and Recommendations issued by the World Trade Organization Technical Barriers to Trade (TBT) Committee.

Designation: A313/A313M – 17

# Standard Specification for Stainless Steel Spring Wire [1]

This standard is issued under the fixed designation A313/A313M; the number immediately following the designation indicates the year of original adoption or, in the case of revision, the year of last revision. A number in parentheses indicates the year of last reapproval. A superscript epsilon (′) indicates an editorial change since the last revision or reapproval.

*This standard has been approved for use by agencies of the U.S. Department of Defense.*

## 1. Scope*

1.1 This specification covers austenitic, austenitic-ferritic, and age-hardenable stainless steel round spring wire intended especially for the manufacture of springs.

1.2 The values stated in either SI units or inch-pound units are to be regarded separately as standard. The values stated in each system may not be exact equivalents; therefore, each system shall be used independently of the other. Combining values from the two systems may result in non-conformance with the standard.

1.3 Unless the order specifies an "M" designation, the material shall be furnished to inch-pound units.

1.4 *This international standard was developed in accordance with internationally recognized principles on standardization established in the Decision on Principles for the Development of International Standards, Guides and Recommendations issued by the World Trade Organization Technical Barriers to Trade (TBT) Committee.*

## 2. Referenced Documents

2.1 *ASTM Standards:* [2]

A555/A555M Specification for General Requirements for Stainless Steel Wire and Wire Rods

A751 Test Methods, Practices, and Terminology for Chemi- cal Analysis of Steel Products

E527 Practice for Numbering Metals and Alloys in the Unified Numbering System (UNS)

2.2 *Society of Automotive Engineers Standard:* [3]

J 1086 Numbering Metals and Alloys

## 3. Ordering Information

3.1 It is the responsibility of the purchaser to specify all requirements that are necessary for material ordered under this specification. Such requirements may include, but are not limited to the following:

3.1.1 Quantity (weight),

3.1.2 Name of material (stainless steel spring wire),

3.1.3 Finish (see 8.1),

3.1.4 Dimension (diameter),

3.1.5 Type designation (Table 1),

3.1.6 ASTM designation and date of issue,

3.1.7 Tensile strength level, when applicable (Table 11 and Table 12),

3.1.8 Supplementary requirements for government procurement, and

3.1.9 Special requirements.

NOTE 1—A typical ordering description is as follows:

2000 lb (1000 kg) Stainless Steel Spring Wire, cold-drawn Class 1, bright finish, 0.032-in. (0.82 mm) diameter, in 100-lb (50 kg) 16-in. (0.4 m) coils, Type 302 to ASTM A313, dated ____.

## 4. General Requirements for Delivery

4.1 In addition to the requirements of this specification, all requirements of the current edition of Specification A555/A555M shall apply. Failure to comply with the general requirements of Specification A555/A555M constitutes non-conformance with this specification.

## 5. Manufacture

5.1 Types 302 Class 1, 304, 305, 316, 321, 347, UNS S20230, and Grades S20430 and XM-28 shall be cold drawn to produce the required mechanical properties.

5.2 Type 631, Type 302 Class 2, and Grade XM-16 shall be furnished in the cold-drawn condition ready for fabrication. Following fabrication Type 631 and Grade XM-16 shall be age or precipitation hardened to produce their maximum strength properties. The tensile strengths to be obtained following the prescribed heat treatment are shown in Table 2 and Table 3 for hardened wire. Type 302 Class 2 shall be stress relieved following fabrication and meet the requirements shown in Table 4. The nominal as-drawn tensile strengths are provided as a guide for the spring manufacturer.

[1] This specification is under the jurisdiction of ASTM Committee A01 on Steel, Stainless Steel and Related Alloys and is the direct responsibility of Subcommittee A01.17 on Flat-Rolled and Wrought Stainless Steel.

Current edition approved Nov. 1, 2017. Published November 2017. Originally approved in 1947. Last previous edition approved in 2013 as A313/A313M – 13. DOI: 10.1520/A0313_A0313M-17.

[2] For referenced ASTM standards, visit the ASTM website, www.astm.org, or contact ASTM Customer Service at service@astm.org. For *Annual Book of ASTM Standards* volume information, refer to the standard's Document Summary page on the ASTM website.

[3] Available from Society of Automotive Engineers (SAE), 400 Commonwealth Dr., Warrendale, PA 15096-0001, http://www.sae.org.

*A Summary of Changes section appears at the end of this standard

Copyright © ASTM International, 100 Barr Harbor Drive, PO Box C700, West Conshohocken, PA 19428-2959. United States



Copyright ASTM International
Provided by IHS Markit under license with ASTM
No reproduction or networking permitted without license from IHS
Not for Resale, 12/03/2017 02:06:37 MST

**TABLE 1 Chemical Requirements**

| UNS Designation [A] | Type | Composition, [B] % | | | | | | | | | |
|---|---|---|---|---|---|---|---|---|---|---|---|
| | | Carbon | Manganese | Phosphorus | Sulfur | Silicon | Chromium | Nickel | Molybdenum | Nitrogen | Other Elements |
| | | | | | | Austenitic Grades | | | | | |
| S 20230 | . . . | 0.02– | 2.0–6.0 | 0.045 | 0.030 | 1.00 | 17.0–19.0 | 2.0–4.5 | 1.0 | 0.13– | Cu 2.0–4.0 |
| S 20430 | 0.06 . . . 0.15 | | 6.5–9.0 | 0.060 | 0.030 | 1.00 | 15.5–17.5 | 1.5–3.5 | 0.25 . . . 0.25 | 0.05– | Cu 2.0–4.0 |
| S 24100 | XM-28 | 0.15 | 11.0–14.0 | 0.060 | 0.030 | 1.00 | 16.5–19.0 | 0.50–2.50 | . . . | 0.20–0.45 | . . . |
| S 30151 | . . . | 0.07–0.09 | 1.50–2.00 | 0.025 | 0.010 | 1.20–1.80 | 16.0–18.0 | 7.0–9.0 | 0.50–1.00 | 0.07–0.11 | Cu 0.40 |
| S 30200 | 302 | 0.12 | 2.00 | 0.045 | 0.030 | 1.00 | 17.0–19.0 | 8.0–10.0 | . . . | 0.10 | . . . |
| S 30400 | 304 | 0.08 | 2.00 | 0.045 | 0.030 | 1.00 | 18.0–20.0 | 8.0–10.5 | . . . | 0.10 | . . . |
| S 30500 | 305 | 0.12 | 2.00 | 0.045 | 0.030 | 1.00 | 17.0–19.0 | 10.5–13.0 | . . . | . . . | . . . |
| S 31600 | 316 | 0.07 | 2.00 | 0.045 | 0.030 | 1.00 | 16.5–18.0 | 10.5–13.5 | 2.00–2.50 | 0.10 | . . . |
| S 32100 | 321 | 0.08 | 2.00 | 0.045 | 0.030 | 1.00 | 17.0–19.0 | 9.0–12.0 | . . . | . . . | Ti 5×(C+N) min |
| S 34700 | 347 | 0.08 | 2.00 | 0.045 | 0.030 | 1.00 | 17.0–19.0 | 9.0–13.0 | . . . | . . . | 10×C min Nb |
| | | | | | | Age-Hardenable Grades | | | | | |
| S 17700 | 631 | 0.09 | 1.00 | 0.040 | 0.030 | 1.00 | 16.0–18.0 | 6.5–7.8 | . . . | . . . | Al 0.75–1.50 |
| S 45500 | XM-16 | 0.05 | 0.50 | 0.040 | 0.030 | 0.50 | 11.0–12.5 | 7.5–9.5 | 0.50 | . . . | Ti 0.80–1.40<br>Cu 1.50–2.50<br>Nb 0.10–0.50 |
| | | | | | | Austenitic-Ferritic Grades | | | | | |
| S32205 | 2205 [C] | 0.030 | 2.00 | 0.030 | 0.020 | 1.00 | 22.0–23.0 | 4.5–6.5 | 3.00–3.50 | 0.14–0.20 | . . . |

[A] New designations established in accordance with Practice E527 and SAE J 1086, Practice for Numbering Metals and Alloys (UNS).

[B] Maximum unless range or minimum is indicated. Where ellipses (. . .) appear in this table, there is no requirement and the element need not be determined or reported. Common

[C] name, not a trademark, widely used, not associated with any one producer.

**TABLE 2 Tensile Strength Requirements for Type 631 [A]**

| Diameter, in. [mm] | Cold Drawn Condition C, ksi [MPa] | Condition CH-900 [B], ksi [MPa] | |
|---|---|---|---|
| | Nominal | min | max |
| 0.010 [0.25] to 0.015 [0.38], incl | 295 [2035] | 335 [2310] | 365 [2515] Over |
| 0.015 [0.38] to 0.020 [0.51], incl | 290 [2000] | 330 [2275] | 360 [2480] Over |
| 0.020 [0.51] to 0.029 [0.74], incl | 285 [1965] | 325 [2240] | 355 [2450] Over |
| 0.029 [0.74] to 0.041 [1.04], incl | 275 [1895] | 320 [2205] | 350 [2415] Over |
| 0.041 [1.04] to 0.051 [1.30], incl | 270 [1860] | 310 [2135] | 340 [2345] Over |
| 0.051 [1.30] to 0.061 [1.55], incl | 265 [1825] | 305 [2100] | 335 [2310] Over |
| 0.061 [1.55] to 0.071 [1.80], incl | 257 [1770] | 297 [2050] | 327 [2255] Over |
| 0.071 [1.80] to 0.086 [2.18], incl | 255 [1760] | 292 [2015] | 322 [2220] Over |
| 0.086 [2.18] to 0.090 [2.29], incl | 245 [1690] | 282 [1945] | 312 [2150] Over |
| 0.090 [2.29] to 0.100 [2.54], incl | 242 [1670] | 279 [1925] | 309 [2130] |
| Over 0.100 [2.54] to 0.106 [2.69], incl | 238 [1640] | 274 [1890] | 304 [2095] |
| Over 0.106 [2.69] to 0.130 [3.30], incl | 236 [1625] | 272 [1875] | 302 [2080] |
| Over 0.130 [3.30] to 0.138 [3.50], incl | 230 [1585] | 260 [1795] | 290 [2000] |
| Over 0.138 [3.50] to 0.146 [3.71], incl | 228 [1570] | 258 [1780] | 288 [1985] Over |
| 0.146 [3.71] to 0.162 [4.11], incl | 226 [1560] | 256 [1765] | 286 [1970] Over |
| 0.162 [4.11] to 0.180 [4.57], incl | 224 [1545] | 254 [1750] | 284 [1960] Over |
| 0.180 [4.57] to 0.207 [5.26], incl | 222 [1530] | 252 [1740] | 282 [1945] Over |
| 0.207 [5.26] to 0.225 [5.72], incl | 218 [1505] | 248 [1710] | 278 [1915] Over |
| 0.225 [5.72] to 0.306 [7.77], incl | 213 [1470] | 242 [1670] | 272 [1875] Over |
| 0.306 [7.77] to 0.440 [11.2], incl | 207 [1425] | 235 [1620] | 265 [1825] Over |
| 0.440 [11.2] to 0.625 [15.88], incl | 203 [1400] | 230 [1585] | 260 [1795] |

[A] When wire is specified in straightened and cut lengths, the minimum tensile strength shall be 90 % of the values listed in the table. Aged at

[B] 900°F [482°C] for 1 h and air cooled.

5.3 Grade S30151 shall be either cold drawn or cold drawn and heat treated to produce the required mechanical properties.

## 6. Chemical Composition

6.1 The steel shall conform to the requirements as to chemical composition prescribed in Table 1.

6.2 Methods and practices relating to chemical analysis required by this specification shall be in accordance with Test Methods, Practices, and Terminology A751.

## 7. Mechanical Requirements

7.1 *Tensile Properties:*

7.1.1 Types 302 Class 1 and 304 shall conform to the requirements shown in Table 5.

7.1.2 Types 305, 316, 321, and 347 shall conform to the requirements shown in Table 6.

7.1.3 Type 631 shall conform to the requirements shown in Table 2 when heat treated 900°F [482°C] for 1 h and air cooled.

--`,,`,,,`,,`,`,,`,`,,`,,`,`,`,`-`-`,,`,,`,`,,`---

No reproduction or networking permitted without license from IHS

Copyright ASTM International
Provided by IHS Markit under license with ASTM

Not for Resale, 12/03/2017 02:06:37 MST

**TABLE 3 Tensile Strength Requirements for Grade XM-16** [A]

| Diameter, in. [mm] | Cold Drawn, ksi [MPa] Nominal | Age Hardened [B], ksi [MPa] min | Age Hardened [B], ksi [MPa] max |
|---|---|---|---|
| 0.010 [0.25] to 0.040 [1.02], incl | 245 [1690] | 320 [2205] | 350 [2415] Over |
| 0.040 [1.02] to 0.050 [1.27], incl | 235 [1620] | 310 [2135] | 340 [2345] Over |
| 0.050 [1.27] to 0.060 [1.52], incl | 225 [1550] | 305 [2100] | 335 [2310] Over |
| 0.060 [1.52] to 0.075 [1.90], incl | 220 [1515] | 295 [2035] | 325 [2240] |
| Over 0.075 [1.90] to 0.085 [2.16], incl | 215 [1480] | 290 [2000] | 320 [2205] |
| Over 0.085 [2.16] to 0.095 [2.41], incl | 210 [1450] | 285 [1965] | 315 [2170] Over |
| 0.095 [2.41] to 0.110 [2.79], incl | 200 [1380] | 278 [1915] | 308 [2125] |
| Over 0.110 [2.79] to 0.125 [3.17], incl | 195 [1345] | 272 [1875] | 302 [2080] |
| Over 0.125 [3.17] to 0.150 [3.81], incl | 190 [1310] | 265 [1825] | 295 [2035] |
| Over 0.150 [3.81] to 0.500 [12.7], incl | 180 [1240] | 260 [1795] | 290 [2000] |

[A] When wire is straightened and cut lengths, the minimum tensile strength shall be 90 % of the values listed in the table. Aged at
[B] 850°F [454°C] for ½ h and air cooled.

**TABLE 4 Tensile Strength Requirement for Type 302 Class 2**

| Diameter, in. [mm] | ksi [MPa] Cold Drawn Nominal | ksi [MPa] Stress Relieved [A] min | ksi [MPa] Stress Relieved [A] max |
|---|---|---|---|
| 0.050 [1.30] to 0.160 [4.00], incl | 290 [2000] | 290 [2000] | 340 [2345] |

[A] Stress relieved at 800 to 850°F [430 to 455°C] for ½ h and air cooled.

7.1.4 Grade XM-16 shall conform to the requirements shown in Table 3 when heat treated 850°F [454°C] for ½ h and air cooled.

7.1.5 Grade XM-28 shall conform to the requirements shown in Table 7.

7.1.6 Type 302 Class 2 shall conform to the requirements shown in Table 4.

7.1.7 Grade S20430 shall conform to the requirements shown in Table 8.

7.1.8 Cold drawn grade S30151 shall conform to the requirements shown in Table 9.

7.1.9 Cold drawn grade UNS S20230 shall conform to the requirements shown in Table 10.

7.1.10 Cold drawn, as delivered grade S32205 shall conform to the requirements shown in Table 11 and Table 12.

7.2 *Wrap Test:*

7.2.1 Wire 0.162 in. [4.11 mm] and smaller in diameter shall wind on itself as an arbor without breaking.

7.2.2 Wire larger than 0.162 in. [4.11 mm] in diameter shall wind without breaking on a mandrel having a diameter twice the diameter of the wire.

7.3 *Uniformity (Coil Test):*

7.3.1 In the as-cold drawn condition, a specimen coil shall be wound on an arbor of the size specified in Table 13 to form a tightly wound coil.

7.3.2 After winding, the specimen coil shall be stretched to a permanent set four times its as-wound length. After this treatment, the specimen coil shall show uniform pitch with no splits or fractures.

7.4 *Cast*—A loop or ring shall be cut from the bundle and allowed to fall on the floor. The wire shall lie flat and not spring up or show a wavy condition.

7.5 *Bend Test*—When specified in the purchase order, Types 302, 304, 305, 316, 321, and 347 shall be tested by the bend test. A piece not more than 10 in. [254 mm] long shall be selected from each test sample. These specimens shall be tested in a bending machine conforming substantially to Fig. 1. Bends shall be made at as nearly a uniform rate as possible, not exceeding 50 bends per minute, and in no case shall the speed be so great as to cause undue heating of the wire. The test specimen shall be bent back and forth through a total angle of 180° until failure occurs. Each 90° movement in either direction shall be counted as one bend. The wire shall withstand the minimum number of bends specified in Table 5 and Table 6.

## 8. Finish

8.1 Stainless steel spring wire is supplied with different types of finish such as bright, copper, lead, oxide, and other.

## 9. Keywords

9.1 austenitic-ferritic duplex; austenitic stainless steel; precipitation hardening stainless steel; stainless steel; stainless steel spring wire

Copyright ASTM International
Provided by IHS Markit under license with ASTM
No reproduction or networking permitted without license from IHS



Not for Resale, 12/03/2017 02:06:37 MST

**TABLE 5 Tensile Strength Requirements for Types 302 Class 1 and 304 [A]**

| Diameter, in. [mm] | Bend Test Minimum Number of Bends | ksi [MPa] min | ksi [MPa] max |
|---|---|---|---|
| Up to 0.009 [0.23], incl | . . . | 325 | 355 [2450] |
| Over 0.009 [0.23] to 0.010 [0.25], incl | [2240] . . . | 320 | 350 [2415] |
| Over 0.010 [0.25] to 0.011 [0.28], incl | [2205] . . . | 318 | 348 [2400] |
| Over 0.011 [0.28] to 0.012 [0.30], incl | [2190] . . . | 316 | 346 [2385] |
| Over 0.012 [0.30] to 0.013 [0.33], incl | [2180] . . . | 314 | 344 [2370] |
| Over 0.013 [0.33] to 0.014 [0.36], incl | [2165] . . . | 312 | 342 [2360] |
| Over 0.014 [0.36] to 0.015 [0.38], incl | [2150] . . . | 310 | 340 [2345] |
| Over 0.015 [0.38] to 0.016 [0.41], incl | [2135] . . . | 308 | 338 [2330] |
| Over 0.016 [0.41] to 0.017 [0.43], incl | [2125] . . . | 306 | 336 [2315] |
| Over 0.017 [0.43] to 0.018 [0.46], incl | [2110] . . . | 304 | 334 [2300] |
| Over 0.018 [0.46] to 0.020 [0.51], incl | [2095] . . . | 300 | 330 [2275] |
| Over 0.020 [0.51] to 0.022 [0.56], incl | [2070] . . . | 296 | 326 [2250] |
| Over 0.022 [0.56] to 0.024 [0.61], incl | [2040] . . . | 292 | 322 [2220] |
| | [2015] | | |
| Over 0.024 [0.61] to 0.026 [0.66], incl | 8 | 291 [2005] | 320 [2205] |
| Over 0.026 [0.66] to 0.028 [0.71], incl | 8 | 289 [1995] | 318 [2190] |
| Over 0.028 [0.71] to 0.031 [0.79], incl | 8 | 285 [1965] | 315 [2170] |
| Over 0.031 [0.79] to 0.034 [0.86], incl | 8 | 282 [1945] | 310 [2135] |
| Over 0.034 [0.86] to 0.037 [0.94], incl | 8 | 280 [1930] | 308 [2125] |
| Over 0.037 [0.94] to 0.041 [1.04], incl | 8 | 275 [1895] | 304 [2095] |
| Over 0.041 [1.04] to 0.045 [1.14], incl | 8 | 272 [1875] | 300 [2070] |
| Over 0.045 [1.14] to 0.050 [1.27], incl | 8 | 267 [1840] | 295 [2035] |
| Over 0.050 [1.27] to 0.054 [1.37], incl | 8 | 265 [1825] | 293 [2020] |
| Over 0.054 [1.37] to 0.058 [1.47], incl | 7 | 261 [1800] | 289 [1990] |
| Over 0.058 [1.47] to 0.063 [1.60], incl | 7 | 258 [1780] | 285 [1965] |
| Over 0.063 [1.60] to 0.070 [1.78], incl | 7 | 252 [1735] | 281 [1935] |
| Over 0.070 [1.78] to 0.075 [1.90], incl | 7 | 250 [1725] | 278 [1915] |
| Over 0.075 [1.90] to 0.080 [2.03], incl | 7 | 246 [1695] | 275 [1895] |
| Over 0.080 [2.03] to 0.087 [2.21], incl | 7 | 242 [1670] | 271 [1870] |
| Over 0.087 [2.21] to 0.095 [2.41], incl | 7 | 238 [1640] | 268 [1850] |
| Over 0.095 [2.41] to 0.105 [2.67], incl | 5 | 232 [1600] | 262 [1805] |
| Over 0.105 [2.67] to 0.115 [2.92], incl | 5 | 227 [1565] | 257 [1770] |
| Over 0.115 [2.92] to 0.125 [3.17], incl | 5 | 222 [1530] | 253 [1745] |
| Over 0.125 [3.17] to 0.135 [3.43], incl | 3 | 217 [1495] | 248 [1710] |
| Over 0.135 [3.43] to 0.148 [3.76], incl | 3 | 210 [1450] | 241 [1660] |
| Over 0.148 [3.76] to 0.162 [4.11], incl | 3 | 205 [1415] | 235 [1620] |
| Over 0.162 [4.11] to 0.177 [4.50], incl | 3 | 198 [1365] | 228 [1570] |
| Over 0.177 [4.50] to 0.192 [4.88], incl | 1 | 194 [1335] | 225 [1550] |
| Over 0.192 [4.88] to 0.207 [5.26], incl | 1 | 188 [1295] | 220 [1515] |
| Over 0.207 [5.26] to 0.225 [5.72], incl | 1 | 182 [1255] | 214 [1475] |
| Over 0.225 [5.72] to 0.250 [6.35], incl | 1 | 175 [1205] | 205 [1415] |
| Over 0.250 [6.35] to 0.278 [7.06], incl | 1 | 168 [1160] | 198 [1365] |
| Over 0.278 [7.06] to 0.306 [7.77], incl | 1 | 161 [1110] | 192 [1325] |
| Over 0.306 [7.77] to 0.331 [8.41], incl | 1 | 155 [1070] | 186 [1280] |
| Over 0.331 [8.41] to 0.362 [9.19], incl | 1 | 150 [1035] | 180 [1240] |
| Over 0.362 [9.19] to 0.394 [10.00], incl | 1 | 145 [1000] | 175 [1205] |
| Over 0.394 [10.00] to 0.438 [11.12], incl | 1 | 140 [965] | 170 [1170] |
| Over 0.438 [11.12] to 0.500 [12.70], incl | 1 | 135 [930] | 165 [1140] |
| Over 0.500 [12.70] | . . . | 130 [895] | 160 [1105] |

[A] When wire is specified in straightened and cut lengths, the minimum tensile strength shall be 90 % of the values listed in the table.

No reproduction or networking permitted without license from IHS

Copyright ASTM International
Provided by IHS Markit under license with ASTM

Not for Resale, 12/03/2017 02:06:37 MST

**TABLE 6 Tensile Strength Requirements for Types 305, 316, 321, and 347 [A]**

| Diameter, in. [mm] | Bend Test Minimum Number of | ksi [MPa] min | ksi [MPa] max |
|---|---|---|---|
| Up to 0.010 [0.25], incl | . . . | 245 | 275 [1895] |
| Over 0.010 [0.25] to 0.015 [0.38], incl | [1690] . . . | 240 | 270 [1860] |
| Over 0.015 [0.38] to 0.024 [0.61], incl | [1655] . . . [1620] | 235 | 265 [1825] |
| Over 0.024 [0.61] to 0.041 [1.04], incl | 8 | 235 [1620] | 265 [1825] |
| Over 0.041 [1.04] to 0.047 [1.19], incl | 8 | 230 [1585] | 260 [1790] |
| Over 0.047 [1.19] to 0.054 [1.37], incl | 8 | 225 [1550] | 255 [1760] |
| Over 0.054 [1.37] to 0.062 [1.57], incl | 7 | 220 [1515] | 250 [1725] |
| Over 0.062 [1.57] to 0.072 [1.83], incl | 7 | 215 [1480] | 245 [1690] |
| Over 0.072 [1.82] to 0.080 [2.03], incl | 7 | 210 [1450] | 240 [1655] |
| Over 0.080 [2.03] to 0.092 [2.34], incl | 7 | 205 [1415] | 235 [1620] |
| Over 0.092 [2.34] to 0.105 [2.67], incl | 5 | 200 [1380] | 230 [1585] |
| Over 0.105 [2.67] to 0.120 [3.05], incl | 5 | 195 [1345] | 225 [1550] |
| Over 0.120 [3.05] to 0.148 [3.76], incl | 3 | 185 [1275] | 215 [1480] |
| Over 0.148 [3.76] to 0.166 [4.22], incl | 3 | 180 [1240] | 210 [1450] |
| Over 0.166 [4.22] to 0.177 [4.50], incl | 3 | 170 [1170] | 200 [1380] |
| Over 0.177 [4.50] to 0.207 [5.26], incl | 1 | 160 [1105] | 190 [1310] |
| Over 0.207 [5.26] to 0.225 [5.72], incl | 1 | 155 [1070] | 185 [1275] |
| Over 0.225 [5.72] to 0.250 [6.35], incl | 1 | 150 [1035] | 180 [1240] |
| Over 0.250 [6.35] to 0.312 [7.92], incl | 1 | 140 [965] | 170 [1170] |
| Over 0.312 [7.92] to 0.375 [9.53], incl | 1 | 135 [930] | 165 [1140] |
| Over 0.375 [9.53] to 0.500 [12.70], incl | . . . | 130 | 160 [1105] |
| Over 0.500 [12.70] | [895] . . . [860] | 125 | 155 [1070] |

[A] When wire is specified in straightened and cut lengths, the minimum tensile strength shall be 90 % of the values listed in the table.

**TABLE 7 Tensile Strength Requirements for Grade XM-28 [A]**

| Diameter, in. [mm] | ksi [MPa] min | ksi [MPa] max |
|---|---|---|
| Up to 0.009 [0.23], incl | 325 [2240] | 355 [2450] |
| Over 0.009 [0.23] to 0.010 [0.25], incl | 320 [2205] | 350 [2415] |
| Over 0.010 [0.25] to 0.011 [0.28], incl | 318 [2195] | 348 [2400] |
| Over 0.011 [0.28] to 0.012 [0.30], incl | 316 [2180] | 346 [2385] |
| Over 0.012 [0.30] to 0.013 [0.33], incl | 314 [2165] | 344 [2370] |
| Over 0.013 [0.33] to 0.014 [0.36], incl | 312 [2150] | 342 [2360] |
| Over 0.014 [0.36] to 0.015 [0.38], incl | 310 [2135] | 340 [2345] |
| Over 0.015 [0.38] to 0.016 [0.41], incl | 308 [2125] | 338 [2330] |
| Over 0.016 [0.41] to 0.017 [0.43], incl | 306 [2110] | 336 [2315] |
| Over 0.017 [0.43] to 0.018 [0.46], incl | 304 [2095] | 334 [2305] |
| Over 0.018 [0.46] to 0.020 [0.51], incl | 300 [2070] | 330 [2275] |
| Over 0.020 [0.51] to 0.022 [0.56], incl | 296 [2040] | 326 [2250] |
| Over 0.022 [0.56] to 0.024 [0.61], incl | 292 [2015] | 322 [2220] |
| Over 0.024 [0.61] to 0.026 [0.66], incl | 289 [1995] | 319 [2200] |
| Over 0.026 [0.66] to 0.028 [0.71], incl | 286 [1970] | 316 [2180] |
| Over 0.028 [0.71] to 0.032 [0.81], incl | 282 [1945] | 312 [2150] |
| Over 0.032 [0.81] to 0.037 [0.94], incl | 277 [1910] | 307 [2120] |
| Over 0.037 [0.94] to 0.041 [1.04], incl | 273 [1880] | 303 [2090] |
| Over 0.041 [1.04] to 0.047 [1.19], incl | 270 [1860] | 300 [2070] |
| Over 0.047 [1.19] to 0.054 [1.37], incl | 265 [1825] | 295 [2035] |
| Over 0.054 [1.37] to 0.087 [2.21], incl | 260 [1795] | 290 [2000] |
| Over 0.087 [2.21] to 0.120 [3.05], incl | 255 [1760] | 285 [1965] |
| Over 0.120 [3.05] to 0.166 [4.22], incl | 250 [1725] | 280 [1930] |
| Over 0.166 [4.22] to 0.192 [4.88], incl | 240 [1655] | 270 [1860] |
| Over 0.192 [4.88] to 0.225 [5.72], incl | 230 [1585] | 260 [1795] |
| Over 0.225 [5.72] to 0.278 [7.06], incl | 215 [1480] | 245 [1690] |
| Over 0.278 [7.06] to 0.331 [8.41], incl | 200 [1380] | 230 [1585] |
| Over 0.331 [8.41] to 0.394 [10.00], incl | 185 [1275] | 215 [1480] |
| Over 0.394 [10.00] to 0.500 [12.70], incl | 160 [1105] | 190 [1310] |

When wire is specified in straightened and cut lengths, the minimum tensile strength shall be 85 % of the values listed in the table.

**TABLE 8 Tensile Strength Requirement for Grade S20430 [A]**

| Diameter, in. [mm] | ksi [MPa] min | ksi [MPa] max |
|---|---|---|
| Over 0.080 [2.03] to 0.095 [2.41], incl | 230 [1585] | 260 [1795] |
| Over 0.095 [2.41] to 0.105 [2.67], incl | 215 [1480] | 245 [1690] |

**TABLE 9 Tensile Strength Requirements for S30151 [A]**

| Diameter, in. [mm] | ksi [MPa] min | ksi [MPa] max |
|---|---|---|
| 0.0059 [0.15] to 0.0079 [0.20], incl | 341 [2352] | 393 [2708] |
| Over 0.0079 [0.20] to 0.012 [0.30], incl | 333 [2297] | 384 [2643] |
| Over 0.012 [0.30] to 0.016 [0.40], incl | 326 [2250] | 376 [2590] |
| Over 0.016 [0.40] to 0.020 [0.50], incl | 318 [2199] | 367 [2531] |
| Over 0.020 [0.50] to 0.026 [0.65], incl | 311 [2148] | 359 [2472] |
| Over 0.026 [0.65] to 0.031 [0.80], incl | 304 [2101] | 351 [2419] |
| Over 0.031 [0.80] to 0.039 [1.00], incl | 296 [2040] | 342 [2354] |
| Over 0.039 [1.00] to 0.049 [1.25], incl | 289 [1995] | 334 [2300] |
| Over 0.049 [1.25] to 0.059 [1.50], incl | 283 [1953] | 326 [2250] |
| Over 0.059 [1.50] to 0.069 [1.75], incl | 275 [1895] | 317 [2183] |
| Over 0.069 [1.75] to 0.079 [2.00], incl | 268 [1850] | 309 [2130] |
| Over 0.079 [2.00] to 0.098 [2.50], incl | 253 [1748] | 292 [2015] |
| Over 0.098 [2.50] to 0.118 [3.00], incl | 246 [1695] | 284 [1959] |
| Over 0.118 [3.00] to 0.138 [3.50], incl | 239 [1650] | 276 [1900] |
| Over 0.138 [3.50] to 0.167 [4.25], incl | 231 [1599] | 267 [1840] |
| Over 0.167 [4.25] to 0.197 [5.00], incl | 225 [1550] | 260 [1787] |
| Over 0.197 [5.00] to 0.236 [6.00], incl | 217 [1495] | 250 [1723] |
| Over 0.236 [6.00] to 0.276 [7.00], incl | 210 [1450] | 243 [1670] |
| Over 0.276 [7.00] to 0.335 [8.50], incl | 202 [1399] | 234 [1611] |

Tensile requirements for cold drawn wire. By heat treating the material at 660–800°F [350–425°C] for 0.5–4 h, the tensile strength will increase by approxi- mately 22–44 ksi [150–300 MPa]. If a shorter heat treatment time is used, the effect will be less.

Copyright ASTM International
Provided by IHS Markit under license with ASTM
No reproduction or networking permitted without license from IHS

Not for Resale, 12/03/2017 02:06:37 MST

**TABLE 10 Tensile Strength Requirements for S20230**

| Diameter, in. [mm] | ksi [MPa] | |
|---|---|---|
| | min | max |
| 0.0059 [0.15] to 0.0079 [0.20], incl | 319 [2200] | 367 [2530] |
| Over 0.0079 [0.20] to 0.012 [0.30], incl | 312 [2150] | 358 [2470] |
| Over 0.012 [0.30] to 0.016 [0.40], incl | 305 [2105] | 351 [2420] |
| Over 0.016 [0.40] to 0.020 [0.50], incl | 297 [2045] | 341 [2355] |
| Over 0.020 [0.50] to 0.026 [0.65], incl | 290 [2000] | 334 [2300] |
| Over 0.026 [0.65] to 0.031 [0.80], incl | 283[1950] | 325 [2245] |
| Over 0.031 [0.80] to 0.039 [1.00], incl | 276 [1905] | 318 [2190] |
| Over 0.039 [1.00] to 0.049 [1.25], incl | 269 [1855] | 309 [2130] |
| Over 0.049 [1.25] to 0.059 [1.50], incl | 261 [1800] | 301 [2075] |
| Over 0.059 [1.50] to 0.069 [1.75], incl | 254 [1750] | 292 [2015] |
| Over 0.069 [1.75] to 0.079 [2.00], incl | 246 [1700] | 284 [1955] |
| Over 0.079 [2.00] to 0.098 [2.50], incl | 239 [1650] | 275 [1895] |
| Over 0.098 [2.50] to 0.118 [3.00], incl | 232 [1595] | 266 [1835] |
| Over 0.118 [3.00] to 0.138 [3.50], incl | 224 [1545] | 258 [1780] |
| Over 0.138 [3.50] to 0.167 [4.25], incl | 218 [1500] | 250 [1725] |
| Over 0.167 [4.25] to 0.197 [5.00], incl | 216 [1490] | 248 [1710] |
| Over 0.197 [5.00] to 0.236 [6.00], incl | 203 [1400] | 233 [1610] |
| Over 0.236 [6.00] to 0.276 [7.00], incl | 195 [1345] | 225 [1550] |
| Over 0.276 [7.00] to 0.335 [8.50], incl | 189 [1300] | 217 [1500] |
| Over 0.335 [8.50] to 0.394 [10.0], incl | 181 [1250] | 209 [1440] |

**TABLE 11 Tensile Strength Requirements for S32205 [A]**

| Diameter, in. [mm] | Cold Drawn, ksi [MPa] | |
|---|---|---|
| | min | max |
| 0.0055 [0.14] to 0.0079 [0.20], incl Over | 312 [2150] | 341 [2350] |
| 0.0079 [0.20] to 0.012 [0.30], incl Over | 305 [2100] | 334 [2300] |
| 0.012 [0.30] to 0.020 [0.50], incl Over | 291 [2000] | 320 [2200] |
| 0.020 [0.50] to 0.031 [0.80], incl Over | 276 [1900] | 305 [2100] |
| 0.031 [0.80] to 0.049 [1.25], incl | 262 [1800] | 291 [2000] |
| Over 0.049 [1.25] to 0.079 [2.00], incl | 247 [1700] | 276 [1900] |
| Over 0.079 [2.00] to 0.138 [3.50], incl | 225 [1550] | 254 [1750] |
| Over 0.138 [3.50] to 0.197 [5.00], incl | 211 [1450] | 240 [1650] |
| Over 0.197 [5.00] to 0.314 [8.00], incl | 196 [1350] | 225 [1550] |

[A] Tensile requirements for cold drawn, as-delivered wire. Tensile strength can be increased by 29 ksi [200 MPa] up to 65 ksi [450 MPa] by tempering depending on tensile and tempering conditions. Recommendations: 840°F [450°C]/1–3 h for batch tempering; 950°F [500°C] for 3 to 10 minutes in a continuous conveyor furnace. Shorter times may result in uneven tempering.

During storage, the tensile strength will increase somewhat due to aging. Depending on the storage conditions, the tensile strength can increase by 0 – 12 ksi [0 -80 MPa].

**TABLE 12 Tensile Strength Requirements for S32205 HS (High Strength) [A]**

| Diameter, in. [mm] | Cold Drawn, ksi [MPa] | |
|---|---|---|
| | min | max |
| 0.0079 [0.20] to 0.028 [0.70], incl Over | 344 [2370] | 396 [2730] |
| 0.028 [0.70] to 0.031 [0.80], incl Over | 324 [2230] | 372 [2570] |
| 0.031 [0.80] to 0.040 [1.00], incl Over | 311 [2140] | 357 [2460] |
| 0.040 [1.00] to 0.059 [1.50], incl Over | 303 [2090] | 349 [2410] |
| 0.059 [1.50] to 0.079 [2.00], incl Over | 290 [2000] | 334 [2300] |
| 0.079 [2.00] to 0.098 [2.50], incl Over | 276 [1910] | 318 [2190] |
| 0.098 [2.50] to 0.118 [3.00], incl Over | 270 [1860] | 310 [2140] |
| 0.118 [3.00] to 0.138 [3.50], incl Over | 263 [1810] | 303 [2090] |
| 0.138 [3.50] to 0.157 [4.00], incl Over | 257 [1770] | 295 [2030] |
| 0.157 [4.00] to 0.177 [4.50], incl Over | 249 [1720] | 287 [1980] |
| 0.177 [4.50] to 0.197 [5.00], incl | 243 [1670] | 279 [1930] |

[A] Tensile requirements for high strength cold drawn, as delivered wire. Tensile strength can be increased by 29 ksi [200 MPa] up to 65 ksi [450 MPa] by tempering depending on tensile and tempering conditions. Recommendations: 840°F [450°C]/1–3 h for batch tempering; 950°F [500°C] for 3-10 minutes in a continuous conveyor furnace. Shorter times may result in uneven tempering.

During storage, the tensile strength will increase somewhat due to aging. Depending on the storage conditions, the tensile strength can increase by 0 – 12 ksi [0 -80 MPa].

**TABLE 13 Arbor Diameter Size for Uniformity Test**

| Wire Diameter, in. [mm] | Arbor Diameter, in. [mm] |
|---|---|
| 0.034 [0.85] and under | 0.102 [2.60] |
| Over 0.034 [0.85] to 0.045 [1.20], incl | 0.145 [3.70] |
| Over 0.045 [1.20] to 0.055 [1.40], incl | 0.212 [5.40] |
| Over 0.055 [1.40] to 0.125 [3.20], incl | 0.250 [6.40] |
| Over 0.125 [3.20] to 0.180 [4.60], incl | 0.350 [9.00] |

Copyright ASTM International
Provided by IHS Markit under license with ASTM
No reproduction or networking permitted without license from IHS



Not for Resale, 12/03/2017 02:06:37 MST

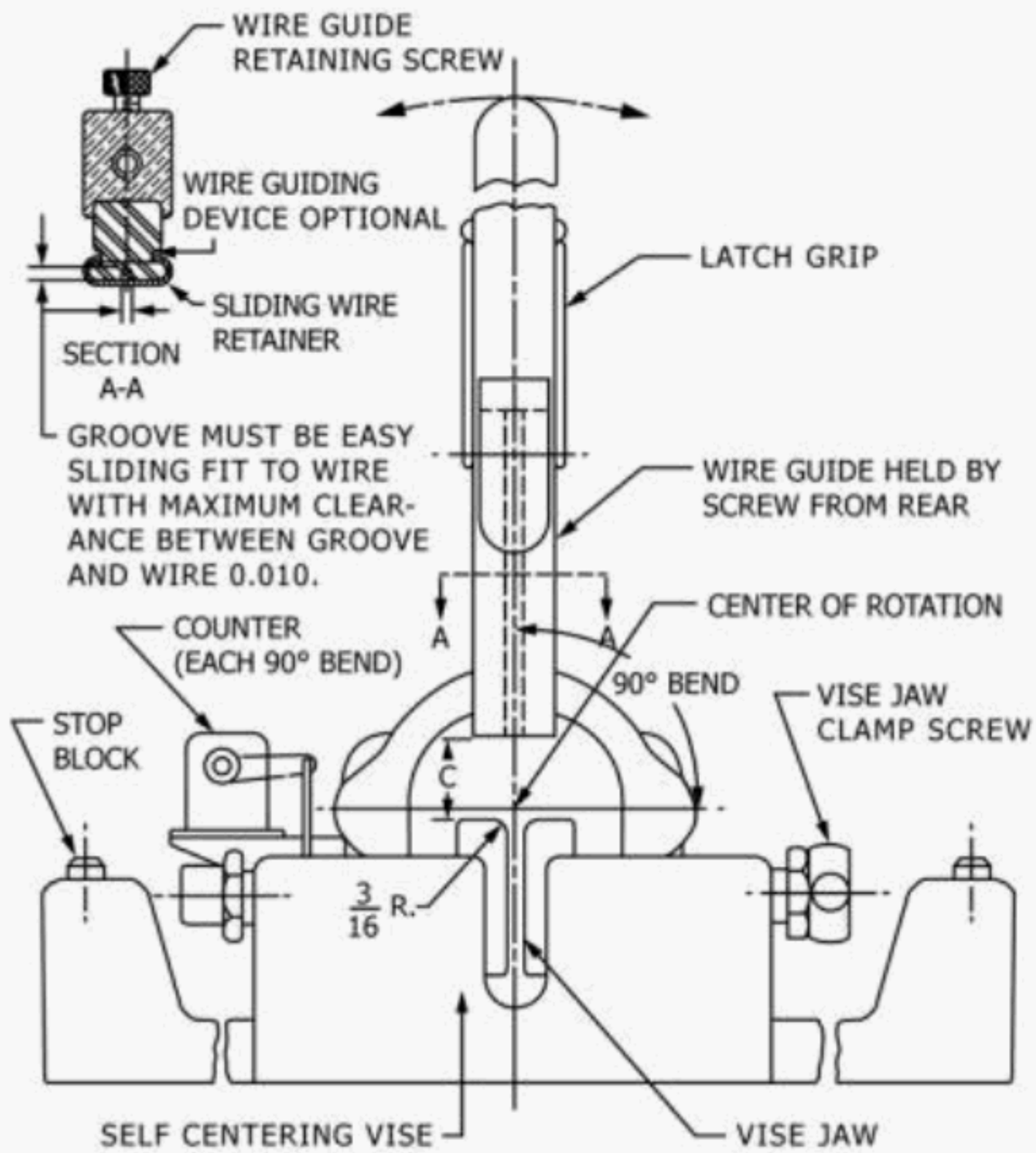


| Diameter of Wire, in. [mm] Over | Clearance C ± 0.005, in. [mm] |
|---|---|
| 0.026 to 0.105 [0.65 to 2.70], incl Over | 0.688 [17.50] |
| 0.105 to 0.162 [2.70 to 4.10], incl Over | 0.813 [20.50] |
| 0.162 to 0.180 [4.10 to 4.60], incl | 0.938 [24.00] |

**FIG. 1 Schematic Arrangement of Bending Machine**

## SUPPLEMENTARY REQUIREMENTS

Unless otherwise specified in the purchase order, the following supplementary requirements shall apply when this specification is used in government procurement of Type 631 spring wire up to and including 0.162 in. [4.11 mm] in diameter.

### S1. Wrapping Test

S.1.1 A wire specimen shall be wrapped five complete turns around a mandrel equal to the diameter of the wire without any surface breaks or cracks occurring in the wire. One specimen shall be taken from every ten coils in the lot.

### S2. Surface Examination

S2.1 A wire specimen shall be etched electrolytically in a 75 % phosphoric acid solution with a current density of 1A/in$^2$ . for a sufficient time to remove up to 1 % of the diameter. After etching the surface of the wire specimen it shall be examined under a 10 power microscope for splits, seams, pits, die marks, scratches, or other imperfections tending to impair the fatigue resistance of springs. Appropriate higher magnification should be used for sizes below 0.125 in. [3.17 mm]. Lubricating coatings, which are insoluble in acid etch solution, shall be removed before etching.

Copyright ASTM International
Provided by IHS Markit under license with ASTM
No reproduction or networking permitted without license from IHS



Not for Resale, 12/03/2017 02:06:37 MST

## SUMMARY OF CHANGES

Committee A01 has identified the location of selected changes to this standard since the last issue (A313/A313M – 13) that may impact the use of this standard. (Approved Oct. 1, 2017.)

*(1)* Reformatted and updated Table 1.

*ASTM International takes no position respecting the validity of any patent rights asserted in connection with any item mentioned in this standard. Users of this standard are expressly advised that determination of the validity of any such patent rights, and the risk of infringement of such rights, are entirely their own responsibility.*

*This standard is subject to revision at any time by the responsible technical committee and must be reviewed every five years and if not revised, either reapproved or withdrawn. Your comments are invited either for revision of this standard or for additional standards and should be addressed to ASTM International Headquarters. Your comments will receive careful consideration at a meeting of the responsible technical committee, which you may attend. If you feel that your comments have not received a fair hearing you should make your views known to the ASTM Committee on Standards, at the address shown below.*

*This standard is copyrighted by ASTM International, 100 Barr Harbor Drive, PO Box C700, West Conshohocken, PA 19428-2959, United States. Individual reprints (single or multiple copies) of this standard may be obtained by contacting ASTM at the above address or at 610-832-9585 (phone), 610-832-9555 (fax), or service@astm.org (e-mail); or through the ASTM website (www.astm.org). Permission rights to photocopy the standard may also be secured from the Copyright Clearance Center, 222 Rosewood Drive, Danvers, MA 01923, Tel: (978) 646-2600; http://www.copyright.com/*



Copyright ASTM International
Provided by IHS Markit under license with ASTM
No reproduction or networking permitted without license from IHS

Not for Resale, 12/03/2017 02:06:37 MST