This international standard was developed in accordance with internationally recognized principles on standardization established in the Decision on Principles for the Development of International Standards, Guides and Recommendations issued by the World Trade Organization Technical Barriers to Trade (TBT) Committee.

Designation: B116 – 95 (Reapproved 2017)

Standard Specification for Figure-9 Deep-Grooved and Figure-8 Copper Trolley Wire for Industrial Haulage[1]

This standard is issued under the fixed designation B116; the number immediately following the designation indicates the year of original adoption or, in the case of revision, the year of last revision. A number in parentheses indicates the year of last reapproval. A superscript epsilon (ε) indicates an editorial change since the last revision or reapproval.

1. Scope

1.1 This specification covers figure-9 deep-section grooved and figure-8 copper trolley wire for use in industrial haulage (Explanatory Note 1).

1.2 The values stated in inch-pound units are to be regarded as the standard. The values given in parentheses are for information only.

1.3 *This international standard was developed in accordance with internationally recognized principles on standardization established in the Decision on Principles for the Development of International Standards, Guides and Recommendations issued by the World Trade Organization Technical Barriers to Trade (TBT) Committee.*

2. Referenced Documents

2.1 *ASTM Standards:*[2]

B9 Specification for Bronze Trolley Wire
B47 Specification for Copper Trolley Wire
B49 Specification for Copper Rod for Electrical Purposes
B193 Test Method for Resistivity of Electrical Conductor Materials

3. Ordering Information

3.1 Orders for material under this specification shall include the following information:

3.1.1 Quantity of each size and section,
3.1.2 Wire size: circular-mil area (Section 6, Fig. 1 or Fig. 2),
3.1.3 Shape of section (Section 1),
3.1.4 Type of copper, if special (Section 4),
3.1.5 Package size (see 14.3),
3.1.6 Lagging, if required (see 14.1),
3.1.7 Relation between vertical axis of grooved wire and axis of reel (see 14.1),
3.1.8 Size of arbor hole if other than for a 2½-in. (64-mm) shaft (see 14.2),
3.1.9 Special package marking, if required (see 14.4), and
3.1.10 Place of inspection (Section 12).

4. Materials and Manufacturer

4.1 The material shall be copper of such quality and purity that the finished product shall have the properties and characteristics prescribed in this specification.

NOTE 1—Specification B49 defines the materials suitable for use.

4.2 Copper bars of special qualities, forms, or types, as may be agreed upon between the manufacturer and the purchaser, and that will conform to the requirements prescribed in this specification may also be used.

5. Tensile Properties

5.1 Figure-8 wire shall conform to the requirements as to tensile properties specified in Table 1.

5.2 Figure-9 deep-section grooved wire shall conform to the requirements as to tensile properties specified in Table 2.

5.3 Tests on a specimen of wire containing a joint shall show at least 95 % of the tensile strength specified in Table 1 or Table 2, as may be applicable. Elongation tests shall not be made on specimens containing joints.

5.4 Tension tests shall be made on representative samples. The elongation shall be determined as the permanent increase in length, due to the breaking of the wire in tension, measured between gage marks placed originally 10 in. apart upon the test specimen (Explanatory Note 1). The fracture shall be between the gage marks and not closer than 1 in. (25 mm) to either gage mark.

5.5 The twist test shall be omitted.

6. Sections

6.1 Standard sections of figure-8 trolley wire shall be those shown in Fig. 1.

6.2 Standard sections of figure-9 deep-section grooved trolley wire shall be those shown in Fig. 2.

[1] This specification is under the jurisdiction of ASTM Committee B01 on Electrical Conductors and is the direct responsibility of Subcommittee B01.04 on Conductors of Copper and Copper Alloys.

Current edition approved April 1, 2017. Published April 2017. Originally approved in 1939. Last previous edition approved in 2012 as B116 – 95 (2012). DOI: 10.1520/B0116-95R17.

[2] For referenced ASTM standards, visit the ASTM website, www.astm.org, or contact ASTM Customer Service at service@astm.org. For *Annual Book of ASTM Standards* volume information, refer to the standard's Document Summary page on the ASTM website.

Copyright © ASTM International, 100 Barr Harbor Drive, PO Box C700, West Conshohocken, PA 19428-2959. United States

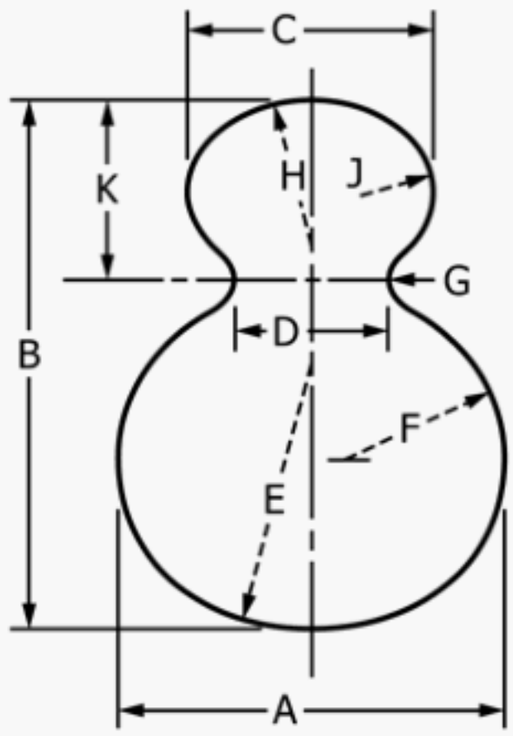

NOTE—For dimensions *E*, *F* and *H* the dimensional tolerance is ±0.016 in. (0.406 mm); for dimensions *G* and *J* the dimensional tolerance is ±0.008 in. (0.203 mm).

Nominal Size, cmils	105 600	133 100	167 800	211 600	350 000
Area, in.^{2} (Explanatory Note 5)	0.0829	0.1045	0.1318	0.1662	0.2750
Area, cmils (Explanatory Note 5)	105 600	133 100	167 800	211 600	350 100
Weight, lb/mile (Explanatory Note 5)	1687	2127	2682	3382	5597
Dimensions for Inspection, in.					
A	$0.312^{+0.006}_{-0.012}$	$0.352^{+0.006}_{-0.012}$	$0.400^{+0.006}_{-0.012}$	$0.450^{+0.006}_{-0.012}$	$0.570^{+0.010}_{-0.020}$
B	0.420 ± 0.008	0.480 ± 0.009	0.540 ± 0.011	0.600 ± 0.012	0.754 ± 0.015
C	0.175 ± 0.004	0.196 ± 0.004	0.222 ± 0.005	0.250 ± 0.005	0.300 ± 0.007
D	$0.106^{+0.004}_{-0.006}$	$0.108^{+0.004}_{-0.006}$	$0.130^{+0.004}_{-0.006}$	$0.150^{+0.004}_{-0.006}$	$0.185^{+0.004}_{-0.006}$
Dimensions for Reference, in.					
E—Radius	0.210	0.240	0.300	0.300	0.359
F—Radius	0.090	0.100	0.110	0.130	0.205
G—Radius	0.050	0.050	0.060	0.075	0.075
H—Radius	0.110	0.140	0.160	0.175	0.188
J—Radius	0.060	0.070	0.070	0.075	0.075
K	0.170 ± 0.004	0.200 ± 0.004	0.210 ± 0.005	0.220 ± 0.005	0.253 ± 0.005

FIG. 1 Standard Sections Figure-8 Trolley Wire

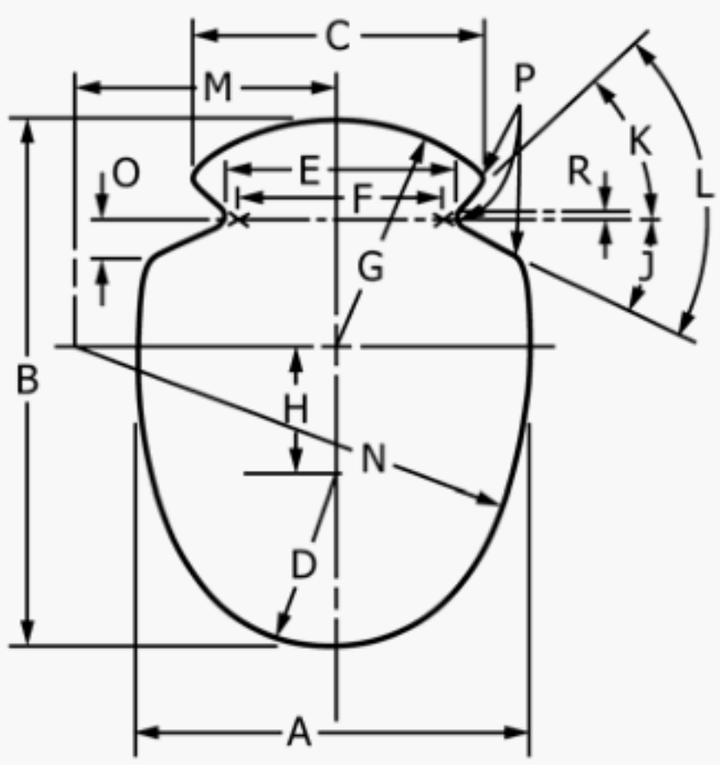

NOTE—Dimension *R* is defined by two center lines of which the upper is the center line of the radius of the groove, and the lower is the center line of the groove.

Nominal size, cmils	350 000	400 000
Area, in.^{2} (Explanatory Note 5)	0.2740	0.3120
Area, cmils (Explanatory Note 5)	348 900	397 200
Weight, lb/mile (Note 5)	5576	6347
Dimensions for Inspection, in.		
A	$0.496^{+0.008}_{-0.016}$	$0.552^{+0.010}_{-0.020}$
B	0.707 ± 0.014	0.745 ± 0.015
C	0.376 ± 0.007	0.376 ± 0.007
Dimensions for Reference, in.		
D—radius	0.208 ± 0.005	0.232 ± 0.005
E	0.267 ± 0.010	0.267 ± 0.010
F	0.250	0.250
G—radius	0.310 ± 0.005	0.310 ± 0.005
H	0.189 ± 0.005	0.203 ± 0.005
J	27 ± 2 deg	27 ± 2 deg
K	51 ± 2 deg	51 ± 2 deg
L	78 deg	78 deg
M	0.423 ± 0.008	0.423 ± 0.008
N—radius	0.671 ± 0.016	0.700 ± 0.016
O	0.066 ± 0.005	0.080 ± 0.005
P—radius	0.015 ± 0.010	0.015 ± 0.010
R	0.005 – 0.005	0.005 – 0.005

FIG. 2 Standard Sections Figure-9 Deep-Section Grooved Trolley Wire

TABLE 1 Tensile Requirements for Figure-8 Wire

Nominal Area, cmils	Tensile Strength, min, psi	Elongation in 10 in., min, %
350 000	42 800	4.50
211 600	46 600	3.75
167 800	48 500	3.25
133 100	50 200	2.80
105 600	51 800	2.40

TABLE 2 Tensile Requirements for Figure-9 Wire

Nominal Area, cmils	Tensile Strength, min, psi	Elongation in 10 in., min %
400 000	41 300	4.50
350 000	42 800	4.50

7. Dimensions and Permissible Variations

7.1 The size shall be expressed as the nominal area of cross section in circular mils.

7.2 The standard sizes of figure-8 trolley wire shall be as specified in Fig. 1.

7.3 The standard sizes of figure-9 deep-section grooved trolley wire shall be as specified in Fig. 2.

7.4 The weight in pounds per mile in figure-8 and figure-9 trolley wire calculated from the weight of a specimen not less than 18 in. (457 mm) in length shall not vary more than ±5 % from that specified in Fig. 1 and Fig. 2, respectively.

7.5 Conformance of the trolley wire to the specified dimensions shall be determined by taking the measurements shown in Fig. 1 and Fig. 2 under heading, "Dimensions for Inspection, in." The shape of the groove for figure-9 trolley wire shall be checked with the" go" and" no-go" slip gages described in Fig. 3. The gages shall be applied to the ends of the samples taken from each reel. Samples shall be clean and ends free from burrs. The groove shall be considered as conforming to this specification if the "go" gage can be pushed on the straightened wire by hand and the "no-go" gage cannot be pushed on the wire.

8. Resistivity

8.1 Electrical resistivity shall be determined on representative samples by resistance measurements (Explanatory Note 2). At a temperature of 20°C the resistivity shall not exceed 900.77Ω· lb/mile.[2]

8.2 The electrical resistivity of the material shall be determined in accordance with Test Method B193.

9. Density

9.1 For the purpose of calculating weights, cross sections, etc., the density of the copper shall be taken as 8.89 g/cm^3 (0.32117 lb/in.^{3}) at 20°C (Explanatory Note 3).

10. Joints

10.1 No joints shall be made in the completed wire. Joints in the wire and rods made prior to final drawings shall be in accordance with the best commercial practice, and shall be capable of meeting the tensile strength requirements in 5.3.

11. Workmanship, Finish, and Appearance

11.1 The wire shall be of uniform size, shape, and quality throughout, and shall be free from all scale, flaws, splits, and scratches not consistent with the best commercial practice.

12. Inspection

12.1 All tests governing the acceptance or rejection of the wire, unless otherwise specified, shall be made at the place of manufacture with apparatus furnished by the manufacturer and in the presence of the purchaser or his representative, who shall be furnished a copy of the tests. The manufacturer shall afford the inspector representing the purchaser all reasonable facilities, without charge, to satisfy him as to the reliability of the results before the wire is delivered. If the purchaser waives inspection, and if he so elects at that time, he shall be furnished with a certified copy of tests made by the manufacturer.

13. Rejection

13.1 Any reel of wire that fails to conform to the requirements prescribed in this specification may be rejected. Failure of 30 % of the number of reels ready for inspection at one time shall be deemed sufficient cause for rejection of the whole lot.

14. Packaging and Package Marking

14.1 All wire shall be shipped on substantial reels, suitable for the weight of the wire handled, and shall be well protected from injury. The diameter of the reel drums shall be sufficiently large, not less than 30 in. (762 mm), to eliminate difficulty with waves or kinks when the wire is strung. If reels are to be lagged, it shall be so specified by the purchaser. The wire shall be reeled with turns tightly together, in uniform layers, free from kinks and crosses. The relation between the vertical axis of grooved wire as finally strung and the axis of the reel shall be as specified by the purchaser and shall be approximately constant.

14.2 The ends of the wire shall be securely fastened to the sides of the reel with no less than six staples. The staples shall be at least 2 in. (50 mm) in length and made from wire not less than 0.145 in. (3.7 mm) in diameter. Care shall be exercised in stapling so that there is no damage to the surface of the exposed layer of wire. All reels shall have the arbor holes reinforced with steel plate at least ½ in. (12 mm) in thickness. Unless otherwise specified, round arbor holes shall be for a 2½-in. (63.5-mm) shaft.

14.3 The length or the weight of wire to be wound upon each reel shall be agreed upon between the manufacturer and the purchaser in placing individual orders.

14.4 Reels shall be marked legibly and indelibly with the serial number, size, kind, length, and weight of wire, and such other information as is specified by the purchaser.

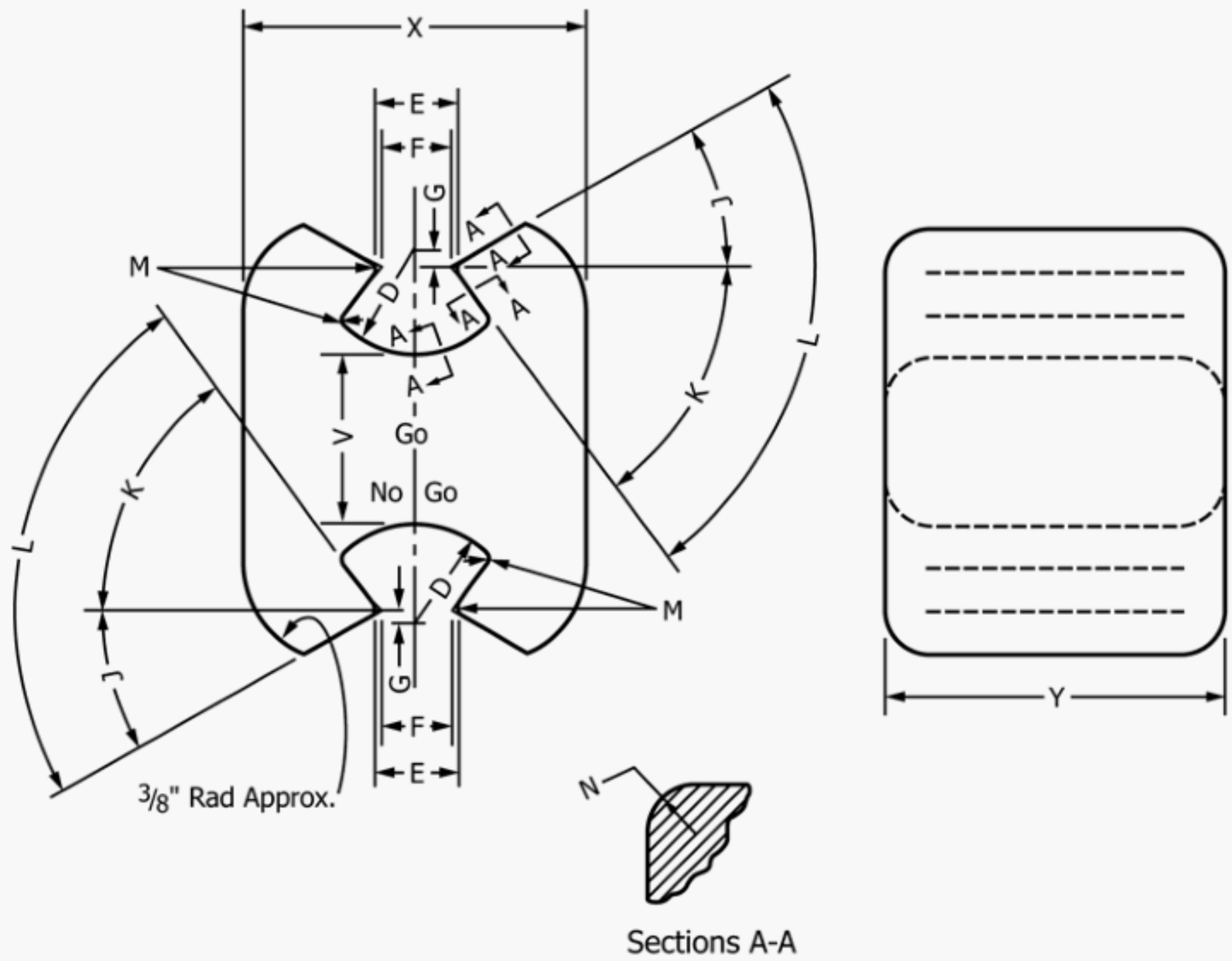

Dimension	Dimensions of Gage, in. (Except as Indicated)	
	For Trolley Wire of Nominal Sizes, 350 000 and 400 000 cmils	
	Go	No-Go
D	5/16	5/16
E	0.278 ± 0.0005	0.257 $^{+0.000}_{-0.001}$
F	0.268	0.248
G	0.063	0.063
J	25°	29°
K	53°	53°
L	78°	82°
M—radius	0.010 ± 0.002	0.010 ± 0.002
N—radius	1/16	1/16
V	1/2	1/2
X	1	1
Y	1	1

FIG. 3 Slip Gage for Testing Groove of Trolley Wire

EXPLANATORY NOTES

NOTE 1—Figure-8 trolley wire is used almost exclusively in slow-speed industrial haulage applications, usually in connection with grooved collectors or trolley wheels. The figure-9 deep-section grooved trolley wire supplements the figure-8 design in the largest sizes and is designed for use with trolley wheels or grooved collectors. The "American Standard Grooved Trolley Wire Sections" (the Standard Design of the American Transit Engineering Association) are prescribed in Specifications B9 and B47. These sections are designed for sliding and roller type collectors as well as for grooved and wheel type collectors, the section being wider in proportion to the depth.

NOTE 2—It is known that the rapidity with which load is applied to a sample during tension testing affects the performance of the sample to a greater or lesser extent, depending upon many factors. In general, tested values of tensile strength are increased and elongation values are reduced with increase in speed of the moving head of the testing machine. However, there are speeds below which no practical change is observable. It is suggested that tests be made at speeds of moving head that, under no-load conditions, are not greater than 3 in. min, but in no case at a speed greater than that at which correct readings can be made. No minimum restriction on speed of testing seems necessary.

NOTE 3—"Resistivity" is used in place of "percentage conductivity." The value of 0.15328Ω· g/m^2 at 20°C is the international standard for the resistivity of annealed copper equal to 100 % conductivity. This term means that a wire 1 m in length and weighing 1 g would have a resistance of 0.15328 Ω. This is equivalent to a resistivity value of 875.20 Ω·lb/mile^2 which signifies the resistance of a wire 1 mile in length weighing 1 lb. It is also equivalent, for example, to 1.7241 μΩ/cm of length of a bar 1 cm^2 in cross section. A complete discussion of this subject is contained in *NBS Handbook 100*[3] of the National Bureau of Standards. Relationships that

[3] *NBS Handbook 100*, National Institute of Standards and Technology, Available from National Technical Information Service (NTIS), 5301 Shawnee Rd., Alexandria, VA 22312, http://www.ntis.gov.

may be useful in connection with the values of resistivity prescribed in this specification are as follows, each column containing equivalent expressions, at 20°C.

Conductivity as 20°C, %	100.000	97.16
Ωlb/mile^2	875.20	900.77
Ω·g/m^2	0.15328	0.15755
Ω·cmil/ft	10.371	10.674
Ω·mm^2/m	0.017241	0.017745
μΩ·in.	0.67879	0.69863
μΩ·cm	1.7241	1.7745

NOTE 4—The value of density of copper is in accordance with the International Annealed Copper Standard. The corresponding value at 0°C is 8.0 g/cm^3 (0.32150 lb/in.^{3}). As pointed out in the discussion of this subject in *NBS Handbook 100*, there is no appreciable difference in values of density of hard-drawn and annealed copper wire.

NOTE 5—The values for area in square inches and circular mils as well as the weight in pounds per mile are calculated from the dimensions given in Fig. 1 and Fig. 2, respectively.

ASTM International takes no position respecting the validity of any patent rights asserted in connection with any item mentioned in this standard. Users of this standard are expressly advised that determination of the validity of any such patent rights, and the risk of infringement of such rights, are entirely their own responsibility.

This standard is subject to revision at any time by the responsible technical committee and must be reviewed every five years and if not revised, either reapproved or withdrawn. Your comments are invited either for revision of this standard or for additional standards and should be addressed to ASTM International Headquarters. Your comments will receive careful consideration at a meeting of the responsible technical committee, which you may attend. If you feel that your comments have not received a fair hearing you should make your views known to the ASTM Committee on Standards, at the address shown below.

This standard is copyrighted by ASTM International, 100 Barr Harbor Drive, PO Box C700, West Conshohocken, PA 19428-2959, United States. Individual reprints (single or multiple copies) of this standard may be obtained by contacting ASTM at the above address or at 610-832-9585 (phone), 610-832-9555 (fax), or service@astm.org (e-mail); or through the ASTM website (www.astm.org). Permission rights to photocopy the standard may also be secured from the Copyright Clearance Center, 222 Rosewood Drive, Danvers, MA 01923, Tel: (978) 646-2600; http://www.copyright.com/