This international standard was developed in accordance with internationally recognized principles on standardization established in the Decision on Principles for the Development of International Standards, Guides and Recommendations issued by the World Trade Organization Technical Barriers to Trade (TBT) Committee.

Designation: C674 – 13 (Reapproved 2018)

Standard Test Methods for Flexural Properties of Ceramic Whiteware Materials[1]

This standard is issued under the fixed designation C674; the number immediately following the designation indicates the year of original adoption or, in the case of revision, the year of last revision. A number in parentheses indicates the year of last reapproval. A superscript epsilon (ε) indicates an editorial change since the last revision or reapproval.

1. Scope

1.1 These test methods cover determination of the modulus of rupture and the modulus of elasticity of fired ceramic whitewares bodies, formed by any fabrication method, and are applicable to both glazed and unglazed test specimens.

1.2 The values stated in inch-pound units are to be regarded as the standard. The metric equivalents of inch-pound units may be approximate.

1.3 *This standard does not purport to address all of the safety concerns, if any, associated with its use. It is the responsibility of the user of this standard to establish appropriate safety, health, and environmental practices and determine the applicability of regulatory limitations prior to use.*

1.4 *This international standard was developed in accordance with internationally recognized principles on standardization established in the Decision on Principles for the Development of International Standards, Guides and Recommendations issued by the World Trade Organization Technical Barriers to Trade (TBT) Committee.*

2. Summary of Test Methods

2.1 The specimens, either cylindrical, or rectangular, are supported on knife edges over a suitable span and a direct load is applied at the midpoint between the supports at a uniform rate until breakage occurs. The modulus of elasticity may be determined by halting the applied load at definite intervals and measuring the deflection of the specimen at the midpoint to the nearest 0.001 in. (0.025 mm).

3. Significance and Use

3.1 These test methods provide a means for determining the modulus of rupture and the modulus of elasticity, which may be required in product specifications.

4. Apparatus

4.1 *Testing Machine*—Any suitable testing machine may be used, provided uniform rates of direct loading can be maintained.

4.1.1 For all specimens the loading rate should be such that the specimen should fail in approximately 1 min. Table 1 lists loading rates that shall be used for each size specimen. For strengths of specimens intermediate of those specified, interpolation can be used to obtain the equivalent loading rate.

4.1.2 For the prescribed rectangular specimens the loading rate shall be 1000 ± 150 lbs (454 ± 68 kg)/min.

4.2 *Bearing Edges*—For the support of the test specimen, two steel (or high-strength ceramic) knife edges rounded to a radius of 0.125 in. (3.18 mm) shall be provided. The load shall be applied by means of a third steel knife edge rounded to a radius of 0.125 in. When testing rectangular specimens, the supporting members for the bearing edges shall be constructed to provide a means for alignment of the bearing surfaces with the surfaces of the test specimen (it being possible that the rectangular specimen may be wedge-shaped or twisted). The apparatus shown in Figs. 1 and 2 are suggested as suitable devices for ensuring proper spacing and alignment of the bearing edges for rectangular test specimens.

5. Test Specimens

5.1 *Preparation of Specimens*—Form, fire, and finish the specimens by the appropriate methods, following practices used in actual production.

5.2 *Dimensions*—The specimens shall be approximately 1.125 in. (28.6 mm), 0.750 in. (19.2 mm), 0.500 in. (12.7 mm), or 0.250 in. (6.4 mm) in diameter, whichever diameter is most comparable to that of the finished product. The length shall be 6 ± 0.50 in. (153 ± 12.7 mm) to permit an overhang of at least 0.25 in. (6.4 mm) at each end when mounted on the supports. Note that the 0.25-in. specimens may be 3.75 ± 0.25 in. (95 ± 7 mm) long.

5.2.1 The dry-pressed specimens shall be rectangular bars approximately 1 in. (25.4 mm) by 0.50 in. (12.7 mm) in cross section and at least 4.50 in. (114 mm) in length to permit an overhang of at least 0.25 in. at each end when mounted on the supports.

5.3 *Handling*—Observe all due precautions in the forming, drying, and firing to produce straight test specimens of uniform cross section.

5.4 *Storage*—Cool test specimens taken warm from the kiln in a desiccator. If the testing must be delayed, store the bars in the desiccator, or in an electric oven at 110°C, and then cool in

[1] These test methods are under the jurisdiction of ASTM Committee C21 on Ceramic Whitewares and Related Productsand are the direct responsibility of Subcommittee C21.03 on Methods for Whitewares and Environmental Concerns.

Current edition approved Feb. 1, 2018. Published February 2018. Originally approved in 1971. Last previous edition approved in 2013 as C674 – 13. DOI: 10.1520/C0674-13R18.

Copyright © ASTM International, 100 Barr Harbor Drive, PO Box C700, West Conshohocken, PA 19428-2959. United States

TABLE 1 Loading Rates for Specimens

Specimen Size, in. (mm)	Span, in. (mm)	Nominal MOR, ksi (MPa)		
		10 (69)	30 (207)	50 (345)
		Loading Rate, lb/min (kg/s)		
1.125 (28.6) diameter	5 (127)	1100 (8.32)	3400 (25.70)	5600 (42.34)
0.750 (19.2) "	5 (127)	300 (2.27)	1000 (7.56)	1700 (12.85)
0.500 (12.7) "	5 (127)	100 (0.76)	300 (2.27)	500 (3.76)
0.250 (6.4) "	3 (76)	20 (0.15)	60 (0.45)	100 (0.76)
1 by 0.50 (25.4 by 12.7)	4 (102)	400 (3.02)	1250 (9.45)	2100 (15.88)

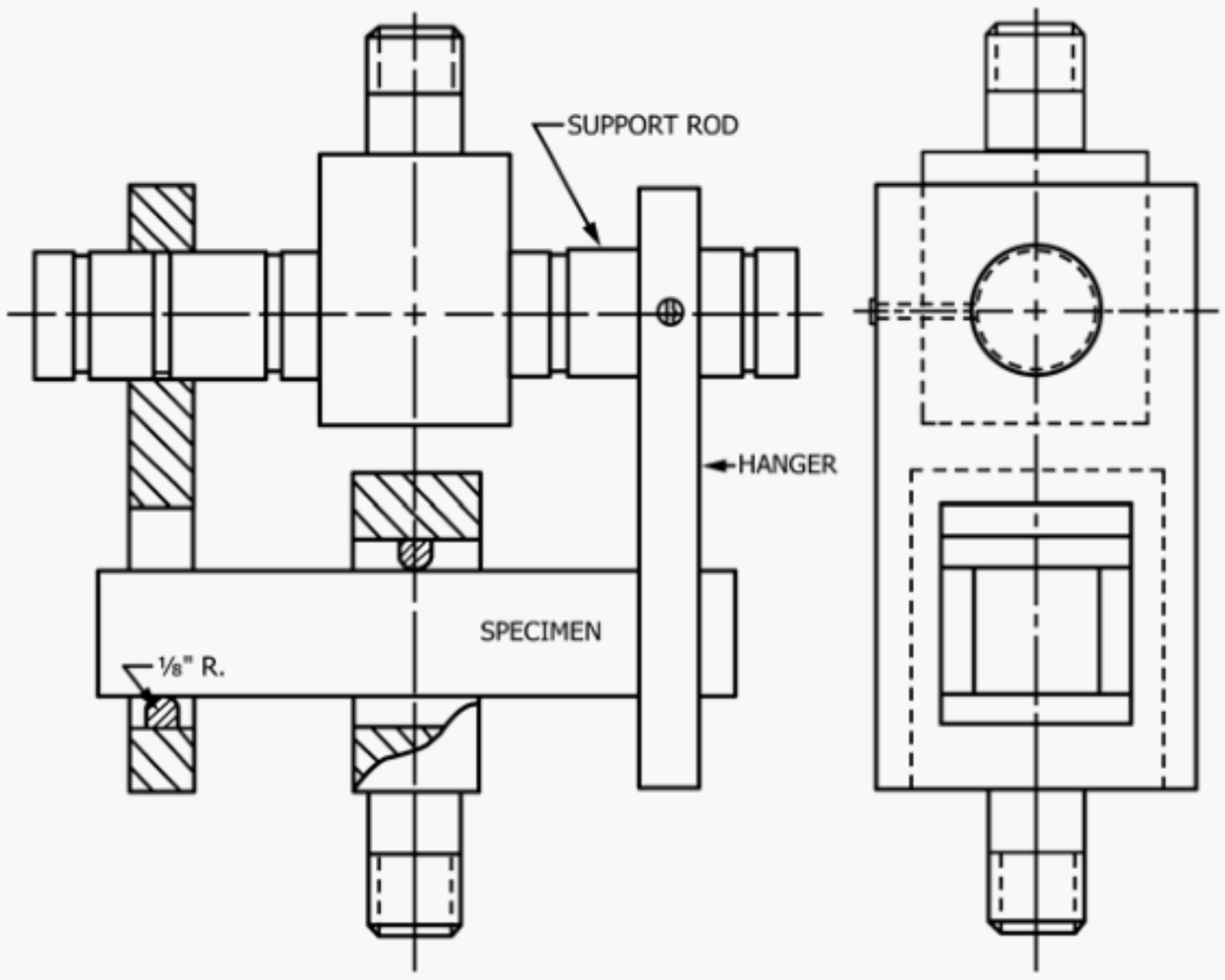

FIG. 1 Suggested Bearing Edge and Specimen Support

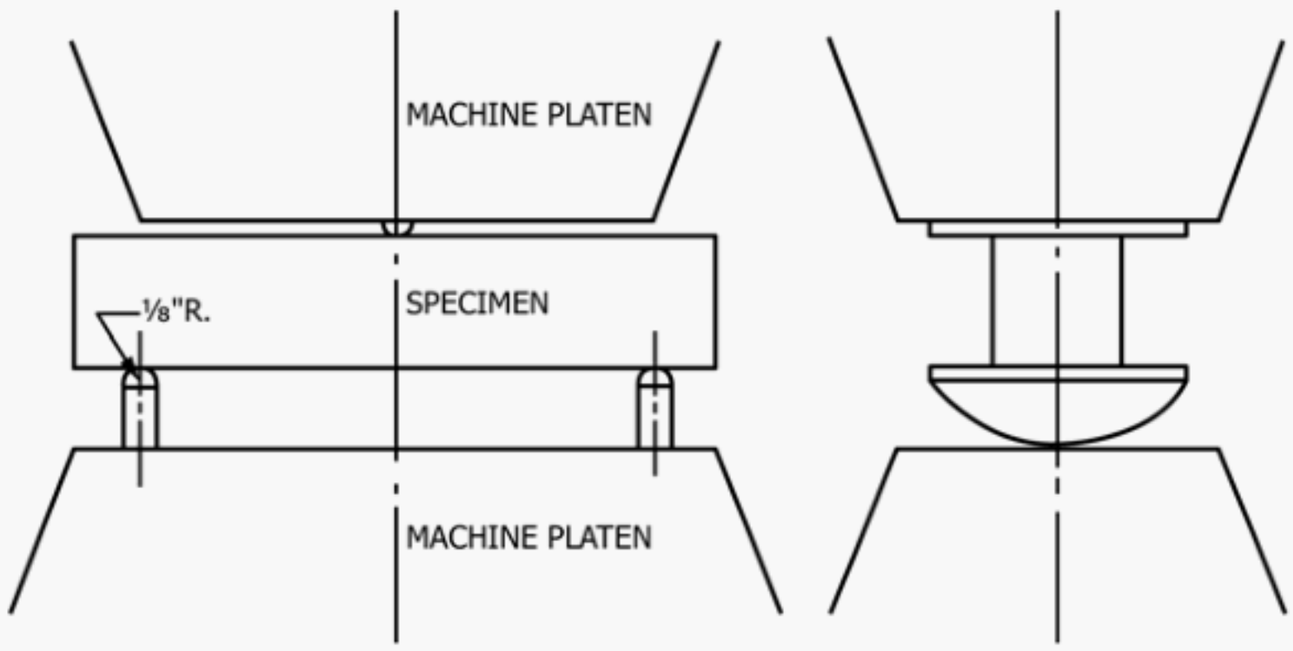

FIG. 2 Alternative Suggested Bearing Edge and Specimen Support

a desiccator before testing. When removing specimens from a hot kiln, take care to avoid thermal shock which will lead to erroneous results.

MODULUS OF RUPTURE

6. Procedure

6.1 Test at least ten dry specimens at room temperature.

NOTE 1—The modulus of elasticity may be determined as described in Sections 10 – 11 on the same type specimens used for the modulus of rupture test.

6.2 Place the cylindrical specimen on the bearing edges, spaced 5 in. (127 mm) ± 2 % between centers, with the specimen overhanging each end by at least 0.25 in. (6.4 mm). Apply the load at a right angle to the specimen and midway (±2 %) between the supporting edges. Apply the load uniformly at the appropriate rate for the specimen size (see 4.1.1)

until failure occurs. Measure the diameter at four approximately equidistant points at the break and take the average to the nearest 0.001 in. (0.0254 mm) for calculation purposes. Break the 0.25-in. diameter rods between 3-in. (76-mm) centers and note this in the report.

6.2.1 Place the rectangular test specimen on the bearing edges, spaced 4.0 in. (102 mm) between centers, with the specimen overhanging at each end by at least 0.25 in. (6.4 mm). Apply the load at a right angle to the 1-in. (25.4-mm) surface of the specimen and midway between the supporting edges. Break specimens glazed on only one of the 1-in. surfaces with the glazed surface either up or down, but break all of the specimens from any one lot in the same position and record this position. Apply the load uniformly at the rate of 1000 ± 150 lbs (454 ± 68 kg)/min, until failure occurs. Measure the width and thickness at the break to the nearest 0.001 in. (0.0254 mm).

7. Calculation

7.1 Calculate the modulus of rupture of each circular cross section specimen as follows:

$$M = 8PL/\pi d^3 \quad (1)$$

where:

M = modulus of rupture, psi (or MPa);
P = load at rupture, lbf (or N);
L = distance between supports, in. (or mm);
d = diameter of specimen, in. (or mm).

7.1.1 Calculate the modulus of rupture of each rectangular specimen as follows:

$$M = 3\ PL/2bd^2$$

where:

M = modulus of rupture, psi (or MPa);
P = load at rupture, lbf (or N);
L = distance between supports, in. (or mm);
b = width of specimen, in. (or mm); and
d = thickness of specimen, in. (or mm).

8. Report

8.1 Report the following information:

8.1.1 Identification of the material tested,

8.1.2 Data and computed modulus of rupture for each specimen,

8.1.3 The adjusted average of the computed modulus of rupture values (discarding those values from the bars which, upon inspection, show obvious defect), and

8.1.4 In the case of glazed specimens, the position of the glazed surface or surfaces, with respect to the applied load.

8.2 The report may also include:

8.2.1 A description of type of fracture and the behavior of each specimen under load,

8.2.2 Name and rating of the machine used to make the test, and

8.2.3 A graph showing the individual values of modulus of rupture arranged in ascending order.

9. Precision and Bias

9.1 *Precision:*

9.1.1 *Interlaboratory Test Data*—An interlaboratory test was run in 1978 in which randomly drawn samples of five materials were tested in each of four laboratories. One operator in each laboratory tested ten specimens of each material. The components of variance for flexural strength results expressed as coefficients of variation were calculated as follows:

Single-operator component	2.42 % of the average
Between-laboratory component	18.79 % of the average

9.1.2 *Critical Differences*—For the components of variance reported in 9.1.1, two averages of observed values should be considered significantly different at the 95 % probability level if the difference equals or exceeds the following critical differences listed below:

Number of Observations in Each Average	Critical Difference, % of Grand Average[A]	
	Single-Operator Precision	Between-Laboratory Precision
10	6.72	52.10

[A] The critical differences were calculated using $t = 1.960$ which is based on infinite degrees of freedom.

9.1.3 *Confidence Limits*—For the components of variance noted in 9.1.1, single averages of observed values have the following 95 % confidence limits:

Number of Observations in Each Average	Width of 95 % Confidence Limits, Percent of the Grand Average[A]	
	Single-Operator Precision	Between-Laboratory Precision
10	±4.75	±36.84

[A] The confidence limits were calculated using $t = 1.960$ which is based on infinite degrees of freedom.

9.2 *Bias*—No justifiable statement on bias is possible since the true value of flexural strength of ceramic whiteware materials cannot be established and will be different for each specific material.

MODULUS OF ELASTICITY

10. Procedure

10.1 Support the specimen in the same way as for the modulus of rupture determination. Set any type of deflectometer capable of indicating to 0.001 in. (0.0254 mm) to measure deflection at mid-span relative to the ends of the span. Apply the load uniformly (see either 4.1.1 or 4.1.2) in accordance with the shape of the specimen. Stop the loading at 15 % increments of the expected total breaking load, as may previously have been determined in the modulus of rupture tests, and record the corresponding deflections.

11. Calculation

11.1 Plot the load-deflection readings to a convenient scale and draw a straight (stress-strain) line to represent, as nearly as possible, the average of the plotted points below the elastic limit. (In some materials, increasing departures from a straight line may be noted at the higher stress. Such evidence of plastic

flow, or of non-recoverable strain, indicates that the elastic limit has been exceeded.) If the line does not pass through the zero point, draw a corrected line through this point parallel to the stress-strain line.

11.1.1 Calculate the modulus of elasticity, E, for rectangular specimens from the coordinates of some convenient point on the corrected line as follows:

$$E = W^1 L^3 / 4 \Delta b d^3 \quad (2)$$

where:

W^1 = load coordinate of the selected point, lbf (or N);
L = length of span, in. (or mm);
Δ = deformation coordinate of the selected point, in. (or mm);
b = width of specimen at the center, in. (or mm); and
d = thickness of specimen at the center, in. (or mm).

11.1.2 Calculate the modulus of elasticity, E, for circular cross-section specimens from the coordinates of some convenient point on the corrected line as follows:

$$E = 4 W^1 L^3 / 3 \pi \Delta d^4 \quad (3)$$

where:

W^1 = load coordinate of the selected point, lbf (or N);
L = length of span, in. (or mm);
Δ = deformation coordinate of the selected point, in. (or mm); and
d = diameter of specimen, in. (or mm).

12. Report

12.1 Report the following information:

12.1.1 Identification of the material tested,

12.1.2 Stress-strain data and modulus of elasticity for each specimen, and

12.1.3 In the case of glazed specimens the position of the glazed surface or surfaces.

13. Precision and Bias

13.1 Measurements of Modulus of Elasticity are inherently more precise than measurements of Modulus of Rupture because of unaccounted-for material effects during rupture (see Section 9).

14. Keywords

14.1 ceramic whiteware materials; flexural properties

ASTM International takes no position respecting the validity of any patent rights asserted in connection with any item mentioned in this standard. Users of this standard are expressly advised that determination of the validity of any such patent rights, and the risk of infringement of such rights, are entirely their own responsibility.

This standard is subject to revision at any time by the responsible technical committee and must be reviewed every five years and if not revised, either reapproved or withdrawn. Your comments are invited either for revision of this standard or for additional standards and should be addressed to ASTM International Headquarters. Your comments will receive careful consideration at a meeting of the responsible technical committee, which you may attend. If you feel that your comments have not received a fair hearing you should make your views known to the ASTM Committee on Standards, at the address shown below.

This standard is copyrighted by ASTM International, 100 Barr Harbor Drive, PO Box C700, West Conshohocken, PA 19428-2959, United States. Individual reprints (single or multiple copies) of this standard may be obtained by contacting ASTM at the above address or at 610-832-9585 (phone), 610-832-9555 (fax), or service@astm.org (e-mail); or through the ASTM website (www.astm.org). Permission rights to photocopy the standard may also be secured from the Copyright Clearance Center, 222 Rosewood Drive, Danvers, MA 01923, Tel: (978) 646-2600; http://www.copyright.com/