Designation: C907 – 17 (Reapproved 2018)

Standard Test Method for Tensile Adhesive Strength of Preformed Tape Sealants by Disk Method[1]

This standard is issued under the fixed designation C907; the number immediately following the designation indicates the year of original adoption or, in the case of revision, the year of last revision. A number in parentheses indicates the year of last reapproval. A superscript epsilon (ε) indicates an editorial change since the last revision or reapproval.

1. Scope

1.1 This test method covers a laboratory procedure for determining the tensile adhesive strength of a preformed tape sealant. The type of failure can be determined, and the degree of cohesive/adhesive failure can be estimated.

1.2 The values stated in metric (SI) units are to be regarded as the standard. The values given in parentheses are provided for information purposes only.

1.3 The subcommittee with jurisdiction is not aware of any similar ISO standard.

1.4 *This standard does not purport to address all of the safety concerns, if any, associated with its use. It is the responsibility of the user of this standard to establish appropriate safety, health, and environmental practices and determine the applicability of regulatory limitations prior to use.*

1.5 *This international standard was developed in accordance with internationally recognized principles on standardization established in the Decision on Principles for the Development of International Standards, Guides and Recommendations issued by the World Trade Organization Technical Barriers to Trade (TBT) Committee.*

2. Referenced Documents

2.1 *ASTM Standards:*[2]

C717 Terminology of Building Seals and Sealants

3. Terminology

3.1 *Definitions*—The definitions of the following terms used in this test method are found in Terminology C717: adhesive failure; cohesive failure; preformed tape sealant; sealant; standard conditions; and substrate.

4. Summary of Test Method

4.1 The preformed tape sealant is compressed between two aluminum disks. The disks are pulled apart in a tensile tester to failure. The maximum tensile strength and failure mode are recorded.

5. Significance and Use

5.1 Preformed tape sealants are tacky, deformable solids, that are used under compression between two or more substrates, in various sealing applications where the surfaces may be of similar or dissimilar materials. This procedure measures the tensile strength of the preformed tape sealant. It also provides an indication of the cohesive nature and adhesive bonding properties of the preformed tape sealant. This procedure is not intended to simulate actual use conditions.

6. Apparatus and Accessory Materials

6.1 *Test Fixture,* fabricated of aluminum (mill finish), in accordance with Fig. 1.

NOTE 1—Other substrates may be substituted in 6.1.

6.2 *Tensile Testing Machine,* or equivalent, with a jaw separation rate of 51 mm (2 in.)/min.

6.3 *Auxiliary Hardware,* for attachment of the test fixture to the tensile tester.

6.4 *Knife.*

6.5 *Compression Device,* such as a vise, press, or equivalent.

6.6 *Device,* for recording the tension load in newtons (or pounds-force).

6.7 *Solvent,* such as xylol or toluol.

6.8 *Wiping Cloths,* lint-free.

7. Sampling

7.1 Samples to be tested shall be taken from a fresh roll of preformed tape sealant after first removing and discarding the first 600 mm (2 ft) of the roll.

7.2 Condition the sample at standard conditions for a minimum of 24 h before preparing the test specimens.

[1] This test method is under the jurisdiction of ASTM Committee C24 on Building Seals and Sealants and is the direct responsibility of Subcommittee C24.30 on Adhesion.

Current edition approved Jan. 1, 2018. Published June 2018. Originally approved in 1979. Last previous edition approved in 2017 as C907 – 17. DOI: 10.1520/C0907-17R18.

[2] For referenced ASTM standards, visit the ASTM website, www.astm.org, or contact ASTM Customer Service at service@astm.org. For *Annual Book of ASTM Standards* volume information, refer to the standard's Document Summary page on the ASTM website.

Copyright © ASTM International, 100 Barr Harbor Drive, PO Box C700, West Conshohocken, PA 19428-2959. United States

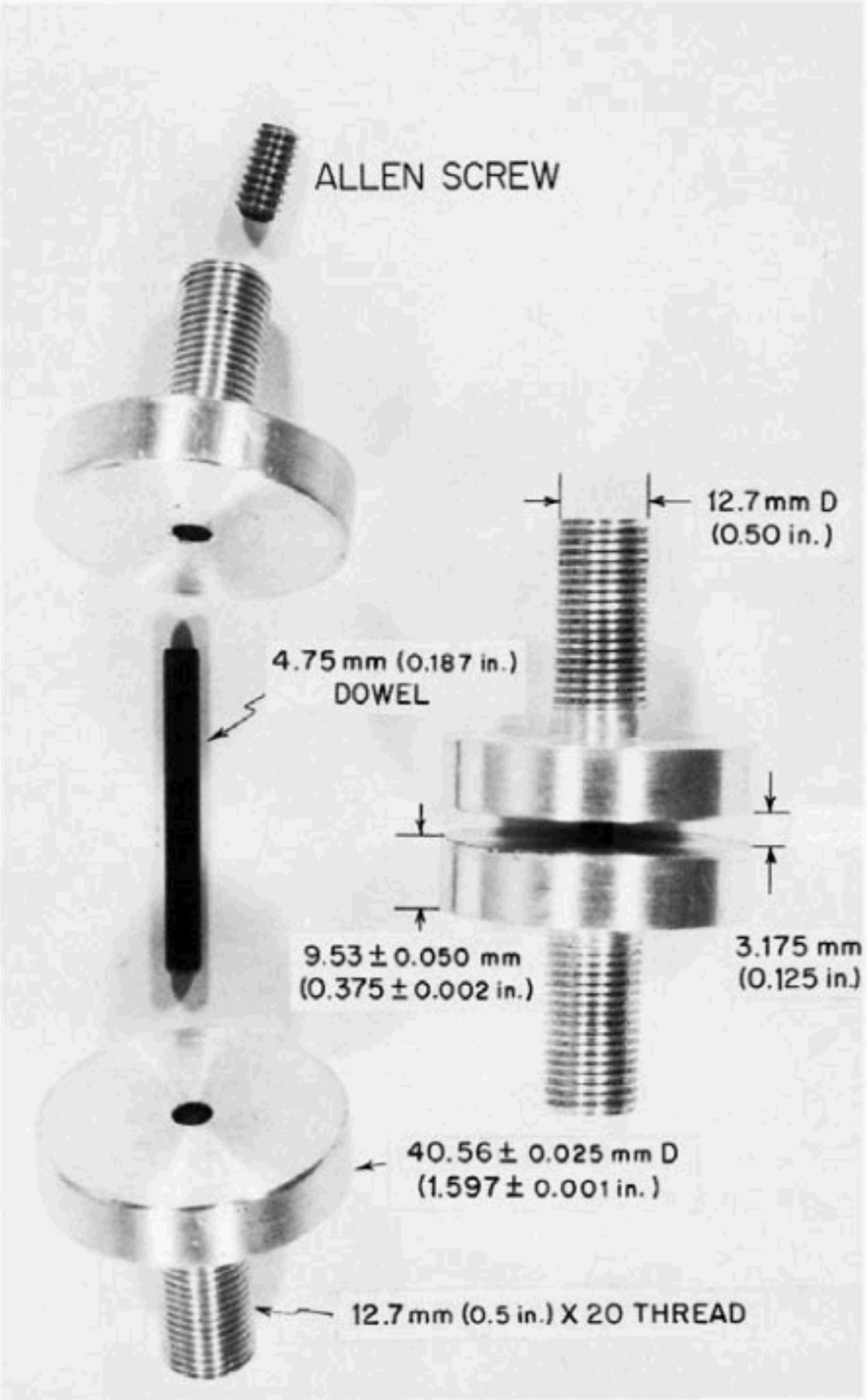

FIG. 1 Test Fixture

8. Test Specimens

8.1 Prepare two test specimens as follows:

8.1.1 Clean the surface of the test fixture with clean solvent to remove grease, oil, or residue from previous test, and dry.

8.1.2 Set the allen screw stop so that when the disks are assembled and the dowel is seated against it, the distance between the parallel disk surfaces is 3.2 mm (0.125 in.).

8.1.3 Place sufficient preformed tape sealant on the face of the fixture so that when mated with the matching face, the entire 3.2-mm (0.125-in.) gap will be filled.

8.1.4 After mating, uniformly compress the test fixture in the compression device until the dowel contacts the allen screw stop. Check to make sure the entire 3.2-mm (0.125-in.) gap is filled with sealant. Compress at the rate of 51 mm (2 in.)/min and hold in compression for 1 min. (Laboratories not able to comply should record the method used and approximate compression rate.)

8.1.5 At the end of 1 min, remove the assembly from the press device, taking care not to disturb it.

8.1.6 With a knife, trim all excess sealant from the periphery of the assembled fixture.

9. Conditioning

9.1 Condition the test specimens as prepared in Section 8, for 1 h at 23 ± 2°C (73.4 ± 3.6°F) before testing.

9.2 Other conditioning periods may be included if and as desired.

10. Procedure

10.1 Activate the tensile testing machine for recording the force required to pull the specimen apart.

10.2 Attach the test fixture to the jaws of the tensile testing machine, taking care to align them vertically, and separate at a crosshead speed of 51 mm (2 in.)/min until failure occurs. The test temperature shall be 23 ± 2°C (73.4 ± 3.6°F). (Other conditions may be used.)

10.3 Record the peak stress load in newtons (or pounds force).

10.4 Visually inspect and record the mode of preformed tape sealant failure, cohesive or adhesive and the appropriate percentage of each type of failure.

11. Calculation

11.1 For each specimen, calculate the maximum tensile strength by dividing the force in newtons (or pounds force) at the peak stress load by 0.0527 m^2 (or 1.976 $in.^2$) (the bonded area of the fixture) to get units of pascals (or pounds force per square inch).

11.2 If the values are not within 10 %, repeat the test.

12. Report

12.1 Report the following information:

12.1.1 Identificaton of the preformed tape sealant, that is, the name, lot number and any other identifying characteristics,

12.1.2 Maximum tensile strength,

12.1.3 Mode and approximate percent of failure, adhesive or cohesive,

12.1.4 Substrate used in test, and

12.1.5 Conditioning and test temperatures used.

13. Precision and Bias[3]

13.1 *Repeatability (I(r))*—The repeatability (within a given laboratory) interval for 6 materials tested by 4 laboratories is 7.835 psi. In future use of this test method, the difference between two test results obtained in the same laboratory on the same material will be expected to exceed 7.835 psi only about 5 % of the time.

13.2 *Reproducibility (I(R))*—The reproducibility (between given laboratories) interval for 6 materials tested by 4 laboratories is 48.611 psi. In future use of this test method, the difference between two test results obtained in a different laboratory on the same material will be expected to exceed 48.611 psi only about 5 % of the time.

[3] Supporting data have been filed at ASTM International Headquarters and may be obtained by requesting Research Report RR: C24–1036.

14. Keywords

14.1 preformed tape sealant; tapes; tape sealants; tensile adhesive strength; tensile strength

ASTM International takes no position respecting the validity of any patent rights asserted in connection with any item mentioned in this standard. Users of this standard are expressly advised that determination of the validity of any such patent rights, and the risk of infringement of such rights, are entirely their own responsibility.

This standard is subject to revision at any time by the responsible technical committee and must be reviewed every five years and if not revised, either reapproved or withdrawn. Your comments are invited either for revision of this standard or for additional standards and should be addressed to ASTM International Headquarters. Your comments will receive careful consideration at a meeting of the responsible technical committee, which you may attend. If you feel that your comments have not received a fair hearing you should make your views known to the ASTM Committee on Standards, at the address shown below.

This standard is copyrighted by ASTM International, 100 Barr Harbor Drive, PO Box C700, West Conshohocken, PA 19428-2959, United States. Individual reprints (single or multiple copies) of this standard may be obtained by contacting ASTM at the above address or at 610-832-9585 (phone), 610-832-9555 (fax), or service@astm.org (e-mail); or through the ASTM website (www.astm.org). Permission rights to photocopy the standard may also be secured from the Copyright Clearance Center, 222 Rosewood Drive, Danvers, MA 01923, Tel: (978) 646-2600; http://www.copyright.com/