This international standard was developed in accordance with internationally recognized principles on standardization established in the Decision on Principles for the Development of International Standards, Guides and Recommendations issued by the World Trade Organization Technical Barriers to Trade (TBT) Committee.

Designation: D130 – 19

Standard Test Method for Corrosiveness to Copper from Petroleum Products by Copper Strip Test[1]

This standard is issued under the fixed designation D130; the number immediately following the designation indicates the year of original adoption or, in the case of revision, the year of last revision. A number in parentheses indicates the year of last reapproval. A superscript epsilon (ε) indicates an editorial change since the last revision or reapproval.

This standard has been approved for use by agencies of the U.S. Department of Defense.

1. Scope*

1.1 This test method covers the determination of the corrosiveness to copper of aviation gasoline, aviation turbine fuel, automotive gasoline, cleaners (Stoddard) solvent, kerosine, diesel fuel, distillate fuel oil, lubricating oil, and natural gasoline or other hydrocarbons having a vapor pressure no greater than 124 kPa (18 psi) at 37.8 °C. (**Warning—**Some products, particularly natural gasoline, may have a much higher vapor pressure than would normally be characteristic of automotive or aviation gasolines. For this reason, exercise extreme caution to ensure that the pressure vessel used in this test method and containing natural gasoline or other products of high vapor pressure is not placed in the 100 °C (212 °F) bath. Samples having vapor pressures in excess of 124 kPa (18 psi) may develop sufficient pressures at 100 °C to rupture the pressure vessel. For any sample having a vapor pressure above 124 kPa (18 psi), use Test Method D1838.)

1.2 The values stated in SI units are to be regarded as standard. The values given in parentheses after SI units are provided for information only and are not considered standard.

1.3 *This standard does not purport to address all of the safety concerns, if any, associated with its use. It is the responsibility of the user of this standard to establish appropriate safety, health, and environmental practices and determine the applicability of regulatory limitations prior to use.* For specific warning statements, see 1.1, 7.1, and Annex A2.

1.4 *This international standard was developed in accordance with internationally recognized principles on standardization established in the Decision on Principles for the Development of International Standards, Guides and Recommendations issued by the World Trade Organization Technical Barriers to Trade (TBT) Committee.*

2. Referenced Documents

2.1 *ASTM Standards:*[2]

D396 Specification for Fuel Oils
D975 Specification for Diesel Fuel Oils
D1655 Specification for Aviation Turbine Fuels
D1838 Test Method for Copper Strip Corrosion by Liquefied Petroleum (LP) Gases
D4057 Practice for Manual Sampling of Petroleum and Petroleum Products
D4177 Practice for Automatic Sampling of Petroleum and Petroleum Products
D6300 Practice for Determination of Precision and Bias Data for Use in Test Methods for Petroleum Products and Lubricants
E1 Specification for ASTM Liquid-in-Glass Thermometers

2.2 *ASTM Adjuncts:*

ASTM Copper Strip Corrosion Standard[3]

3. Terminology

3.1 *Acronyms:*

3.1.1 *CAMI*—Coated Abrasives Manufacturers Institute

3.1.2 *FEPA*—Federation of European Producers Association

4. Summary of Test Method

4.1 A polished copper strip is immersed in a specific volume of the sample being tested and heated under conditions of temperature and time that are specific to the class of material being tested. At the end of the heating period, the copper strip is removed, washed and the color and tarnish level assessed against the ASTM Copper Strip Corrosion Standard.

[1] This test method is under the jurisdiction of ASTM Committee D02 on Petroleum Products, Liquid Fuels, and Lubricants and is the direct responsibility of Subcommittee D02.05 on Properties of Fuels, Petroleum Coke and Carbon Material.

Current edition approved May 1, 2019. Published June 2019. Originally approved in 1922, replacing former D89. Last previous edition approved in 2018 as D130 – 18. DOI: 10.1520/D0130-19.

[2] For referenced ASTM standards, visit the ASTM website, www.astm.org, or contact ASTM Customer Service at service@astm.org. For *Annual Book of ASTM Standards* volume information, refer to the standard's Document Summary page on the ASTM website.

[3] Available from ASTM International Headquarters. Order Adjunct No. ADJD0130. Names of suppliers in the United Kingdom can be obtained from Energy Institute, 61 New Cavendish St., London, WIG 7AR, U.K. Two master standards are held by the IP for reference.

***A Summary of Changes section appears at the end of this standard**

5. Significance and Use

5.1 Crude petroleum contains sulfur compounds, most of which are removed during refining. However, of the sulfur compounds remaining in the petroleum product, some can have a corroding action on various metals and this corrosivity is not necessarily related directly to the total sulfur content. The effect can vary according to the chemical types of sulfur compounds present. The copper strip corrosion test is designed to assess the relative degree of corrosivity of a petroleum product.

6. Apparatus

6.1 *Copper Strip Corrosion Pressure Vessel,* constructed from stainless steel according to the dimensions as given in Fig. 1. The vessel shall be capable of withstanding a test pressure of 700 kPa gage (100 psi). Alternative designs for the vessel's cap and synthetic rubber gasket may be used provided that the internal dimensions of the vessel are the same as those shown in Fig. 1. The internal dimensions of the pressure vessel are such that a nominal 25 mm by 150 mm test tube can be placed inside the pressure vessel.

6.2 *Test Tubes,* of borosilicate glass of nominal 25 mm by 150 mm dimensions. The internal dimensions shall be checked as acceptable by use of a copper strip (see 7.3). When 30 mL of liquid is added to the test tube with the copper strip in it, a minimum of 5 mm of liquid shall be above the top surface of the strip.

6.3 *Test Baths:*

6.3.1 *General*—All test baths shall be able to maintain the test temperature to within ±1 °C (2 °F) of the required test temperature.

6.3.2 *Liquid Bath Used for Submerging Pressure Vessel(s)*—The bath shall be deep enough to submerge one or more pressure vessels (see 6.1) completely during the test. As the bath medium, use water or any liquid that can be satisfactorily controlled to the sample test temperature. The bath shall be fitted with suitable supports to hold each pressure vessel in a vertical position when submerged.

6.3.3 *Bath(s) Used for Test Tubes*—Liquid baths shall be fitted with suitable supports to hold each test tube (see 6.2) in a vertical position to a depth of about 100 mm (4 in.) as measured from the bottom of the test tube to the bath surface. As a liquid bath medium, water and oil have been found satisfactory and controllable at the specified test temperature. Solid block baths shall meet the same temperature control and immersion conditions and shall be checked for temperature measurement (heat transfer) for each product class by running tests on tubes filled with 30 mL of product plus a metal strip of the nominal dimensions given, plus a temperature sensor.

6.4 *Temperature Sensing Device (TSD),* capable of monitoring the desired test temperature in the bath to within an accuracy of ±1 °C or better. The ASTM 12C (12F) (see Specification E1) or IP 64C (64F) total immersion thermometers have been found suitable to use in the test. If used, no more than 10 mm (0.4 in.) of the mercury should extend above the surface of the bath at the test temperature.

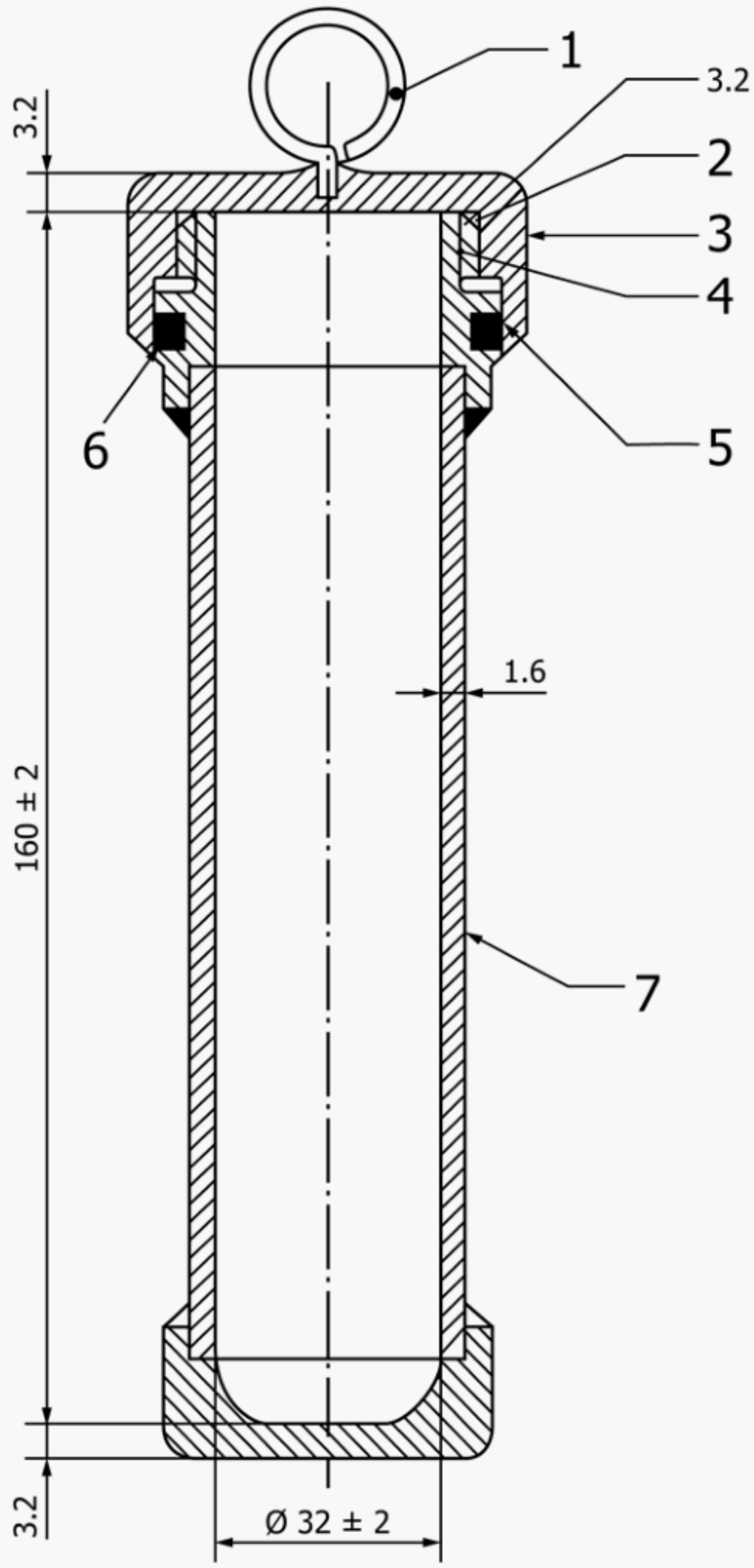

Key:
1 Lifting eye
2 Wide groove for pressure relief
3 Knurled cap
4 Twelve threads per inch NF thread or equivalent
5 Camber inside cap to protect "O" ring when closing pressure vessel
6 Synthetic rubber "O" ring without free sulfur
7 Seamless tube

Material: stainless steel
Welded construction
Maximum test gage pressure: 700 kPa

NOTE 1—Dimensions in millimetres.

NOTE 2—All dimensions without tolerance limits are nominal values.

FIG. 1 Pressure Vessel for Copper Strip Corrosion Test

6.5 *Polishing Vise,* for holding the copper strip firmly without marring the edges while polishing. Any convenient

type of holder (see Appendix X1) may be used provided that the strip is held tightly and that the surface of the strip being polished is supported above the surface of the holder.

6.6 *Viewing Test Tubes,* flat glass test tubes, are convenient for protecting corroded copper strips for close inspection or storage (see Appendix X1 for the description of a flat-glass viewing tube). The viewing test tube shall be of such dimensions as to allow the introduction of a copper strip (see 7.3) and made of glass free of striae or similar defects.

6.7 *Forceps,* with either stainless steel or polytetrafluoroethylene (PTFE) tips, for use in handling the copper strips, have been found suitable to use.

6.8 *Timing Device,* electronic or manual, capable of accurately measuring the test duration within the allowable tolerance.

7. Reagents and Materials

7.1 *Wash Solvent*—Any volatile, less than 5 mg/kg sulfur hydrocarbon solvent may be used provided that it shows no tarnish at all when tested for 3 h at 50 °C (122 °F). 2,2,4-trimethylpentane (isooctane) of minimum 99.75 % purity is the referee solvent and should be used in case of dispute. (**Warning—**extremely flammable, see A2.1.)

7.2 *Surface Preparation/Polishing Materials,* 00 grade or finer steel wool or silicon carbide grit paper or cloth of varying degrees of fineness including 65 µm grade (220 grit CAMI-grade or P220 FEPA-grade); also a supply of 105 µm (120 grit to 150 grit CAMI-grade or P120 to P150 FEPA-grade) size silicon carbide grain or powder and absorbent cotton (cotton wool). A commercial grade is suitable, but pharmaceutical grade is most commonly available and is acceptable.

7.3 *Copper Strips Specification*—Use strips that are 12.5 mm ± 2 mm (½ in.) wide, 1.5 mm to 3.2 mm (1/16 in. to ⅛ in.) thick, and cut 75 mm ± 5 mm (3 in.) long from smooth-surfaced, hard-temper, cold-finished copper of 99.9 + % purity; electrical bus bar stock is generally suitable (see Annex A1). The strips may be used repeatedly but shall be discarded when the strip's surface shows pitting or deep scratches that cannot be removed by the specified polishing procedure, or when the surface becomes deformed, or the dimensions for the copper strip fall outside the specified limits.

7.4 *Ashless Filter Paper or Disposable Gloves,* for use in protecting the copper strip from coming in contact with the individual during final polishing.

8. ASTM Copper Strip Corrosion Standards[3]

8.1 These consist of reproductions in color of typical test strips representing increasing degrees of tarnish and corrosion, the reproductions being encased for protection in plastic and made up in the form of a plaque.

8.1.1 Keep the plastic-encased ASTM Copper Strip Corrosion Standards protected from light to avoid the possibility of fading. Inspect for fading by comparing two different plaques, one of which has been carefully protected from light (for example, new plaque). Observe both sets in diffused daylight (or equivalent) first from a point directly above and then from an angle of 45°. If any evidence of fading is observed, particularly at the left-hand end of the plaque, it is suggested that the one that is the more faded with respect to the other be discarded.

8.1.1.1 Alternatively, place a suitably sized opaque strip (for example, 20 mm (¾ in.) black electrical tape) across the top of the colored portion of the plaque when initially purchased. At intervals remove the opaque strip and observe. When there is any evidence of fading of the exposed portion, the standards shall be replaced.

8.1.1.2 These plaques are full-color reproductions of typical strips. They have been printed on photo lithographed strips encased in plastic and made up in the form of a plaque for protection. Directions for their use are given on the reverse side of each plaque.

8.1.2 If the surface of the plastic cover shows excessive scratching, it is suggested that the plaque be replaced.

9. Samples

9.1 In accordance with D4057 or D4177, or both, it is particularly important that all types of fuel samples, that pass a low-tarnish strip classification, be collected in clean, dark glass bottles, plastic bottles, or other suitable containers that will not affect the corrosive properties of the fuel. Avoid the use of tin plate containers for collection of samples, since experience has shown that they may contribute to the corrosiveness of the sample.

9.2 Fill the containers as completely as possible and close them immediately after taking the sample. Adequate headspace in the container is necessary to provide room for possible thermal expansion during transport. It is recommended that volatile samples be filled between 70 % and 80 % of the container's capacity. Take care during sampling to protect the samples from exposure to direct sunlight or even diffused daylight. Carry out the test as soon as possible after receipt in the laboratory and immediately after opening the container.

9.3 If suspended water (that is, haze) is observed in the sample, dry by filtering a sufficient volume of sample through a medium rapid qualitative filter, into the prescribed clean, dry test tube. Carry out this operation in a darkened room or under a light-protected shield.

9.3.1 Contact of the copper strip with water before, during or after completion of the test run will cause staining, making it difficult to evaluate the strips.

10. Preparation of Test Strips

10.1 *Surface Preparation*—Remove all surface blemishes from all six sides of the strip obtained from a previous analysis (see Note 1). One way to accomplish this is to use 00 grade or finer steel wool or silicon carbide paper or cloth of such degrees of fineness as are needed to accomplish the desired results efficiently. Finish with 65 µm (220 grit CAMI-grade or P220 FEPA-grade) silicon carbide paper or cloth, removing all marks that may have been made by other grades of paper used previously. Ensure the prepared copper strip is protected from oxidation prior to final preparation, such as by immersing the

strip in wash solvent from which it can be withdrawn immediately for final preparation (polishing) or in which it can be stored for future use.

NOTE 1—Only final preparation (10.2) is necessary for commercially purchased pre-polished strips, although if gasoline samples are being analyzed, pre-polished strips may be used "as is" (that is, without going through the final polishing procedure), based on the results of a 2008 interlaboratory study[4] versus manually prepared copper strips. No statistical evaluation involving pre-polished copper strips has been performed using sample types other than gasoline at this time. See Section 14 for more details.

10.1.1 As a practical manual procedure for surface preparation, place a sheet of silicon carbide paper or cloth on a flat surface and moisten it with kerosine or wash solvent. Rub the strip against the silicon carbide paper or cloth with a circular motion, protecting the strip from contact with the fingers by using ashless filter paper or wearing disposable gloves. Alternatively, the surface of the strip can be prepared by use of motor-driven machines using appropriate grades of dry paper or cloth.

10.2 *Final Preparation*—For strips prepared in 10.1 or new strips being used for the first time, remove a strip from its protected location, such as by removing it from the wash solvent. To prevent possible surface contamination during final preparation, do not allow fingers to come in direct contact with the copper strips, such as by wearing disposable gloves or holding the strips in the fingers protected with ashless filter paper. Polish first the ends and then the sides with the 105 µm (120 grit to 150 grit CAMI-grade or P120 to P150 FEPA-grade) silicon carbide grains picked up with a pad of cotton (cotton wool) moistened with wash solvent. Wipe vigorously with fresh pads of cotton (cotton wool) and subsequently handle without touching the surface of the strip with the fingers. Forceps have been found suitable to use. Clamp in a vise and polish the main surfaces with silicon-carbide grains on absorbent cotton. Do not polish in a circular motion. Rub in the direction of the long axis of the strip, carrying the stroke beyond the end of the strip before reversing the direction. Clean all metal dust from the strip by rubbing vigorously with clean pads of absorbent cotton until a fresh pad remains unsoiled. When the strip is clean, immediately immerse it in the prepared sample.

10.2.1 It is important to polish the whole surface of the strip uniformly to obtain a uniformly stained strip. If the edges show wear (surface elliptical), they will likely show more corrosion than the center. The use of a vise (see Appendix X1) will facilitate uniform polishing.

10.2.2 It is important to follow the order of preparation with the correctly sized silicon carbide material as described in 10.1 and 10.2. The final preparation is with 105 µm silicon carbide powder. This is a larger grain size than the 65 µm paper used in the surface preparation stage. The reason for this use of larger silicon carbide grains in the final preparation is to produce asperities (controlled roughness) on the surface of the copper, which act as sites for the initiation of corrosion reactions.

[4] Supporting data have been filed at ASTM International Headquarters and may be obtained by requesting Research Report RR:D02-1703. Contact ASTM Customer Service at service@astm.org.

11. Procedure

11.1 *General*—There are a variety of test conditions, which are broadly specific to given classes of product but, within certain classes, more than one set of test conditions of time or temperature, or both, may apply. In general, aviation gasoline and aviation turbine fuel shall be tested in a pressure vessel at 100 °C and other high vapor pressure fuels, like natural gasoline, at 40 °C. Other liquid products shall be tested in a test tube at 50 °C, 100 °C or even higher temperatures. The conditions of time and temperature given below are commonly used and are quoted in the ASTM specifications for these products where such specifications exist. They are, however, guides only. Other conditions can also be used when required by specifications or by agreement between parties. The test conditions of time and temperature shall be recorded as part of the result (see 13.1).

11.2 *Pressure Vessel Procedure*—For use with aviation gasoline, aviation turbine fuel, and higher vapor pressure samples.

11.2.1 *For Aviation Gasoline and Aviation Turbine Fuel*—Place 30 mL of sample, completely clear and free of any suspended or entrained water (see 9.3) into a chemically clean and dry 25 mm by 150 mm test tube. Within 1 min after completing the final preparation (polishing), slide the copper strip into the sample tube. Place the sample tube into the pressure vessel (Fig. 1) and screw the lid on tightly. If more than one sample is to be analyzed at essentially the same time, it is permissible to prepare each pressure vessel in the batch before completely immersing each pressure vessel in the liquid bath at 100 °C ± 1 °C (212 °F ± 2 °F), provided the elapsed time between the first and last samples is kept to a minimum. After 2 h ± 5 min in the bath, withdraw the pressure vessel and immerse for a few minutes in cool water (tap water). Open the pressure vessel, withdraw the test tube and examine the strip as described in 11.4.

11.2.2 *For Natural Gasoline*—Carry out the test exactly as described in 11.2.1 but at 40 °C (104 °F) and for 3 h ± 5 min.

11.2.3 *For Automotive Gasoline (optional, see 11.3.1)*—Carry out the test exactly as described in 11.2.1 but at 50 °C ± 1 °C (122 °F ± 2 °F) and for 3 h ± 5 min. See 13.2 in the Report section regarding the need to report that a pressure vessel was used in conducting this testing option to differentiate between automotive gasoline samples analyzed by the procedure in 11.3.1 using the test tube procedure.

11.3 *Test Tube Procedure*—For use with most liquid products.

11.3.1 *For Diesel Fuel, Fuel Oil, Automotive Gasoline*—Place 30 mL of sample, completely clear and free of any suspended or entrained water (see 9.3), into a chemically clean, dry 25 mm by 150 mm test tube and, within 1 min after completing the final preparation (polishing), slide the copper strip into the sample tube. If more than one sample is to be analyzed at essentially the same time, it is permissible to prepare each sample in the batch by stoppering each tube with a vented stopper, such as a vented cork before placing each tube in a bath maintained at 50 °C ± 1 °C (122 °F ± 2 °F), provided the elapsed time between the first and last sample

TABLE 1 Copper Strip Classifications

Classification	Designation	Description[A]
Freshly polished strip	...	[B]
1	slight tarnish	a. Light orange, almost the same as freshly polished strip
		b. Dark orange
2	moderate tarnish	a. Claret red
	...	b. Lavender
	...	c. Multicolored with lavender blue or silver, or both, overlaid on claret red
	...	d. Silvery
	...	e. Brassy or gold
3	dark tarnish	a. Magenta overcast on brassy strip
	...	b. Multicolored with red and green showing (peacock), but no gray
4	corrosion	a. Transparent black, dark gray or brown with peacock green barely showing
	...	b. Graphite or lusterless black
	...	c. Glossy or jet black

[A] The ASTM Copper Strip Corrosion Standard is a colored reproduction of strips characteristic of these descriptions.
[B] The freshly polished strip is included in the series only as an indication of the appearance of a properly polished strip before a test run; it is not possible to duplicate this appearance after a test even with a completely noncorrosive sample.

prepared is kept to a minimum. Protect the contents of the test tube from strong light during the test. After 3 h ± 5 min in the bath, examine the strip as described in 11.4. For tests on fuel oil and diesel fuel, to specifications other than Specifications D396 and D975, a temperature of 100 °C (212 °F) for 3 h is often used as an alternative set of conditions. Some automotive gasolines with vapor pressure above 80 kPa at 37.8 °C have exhibited evaporation losses in excess of 10 % of their volume. If such evaporation losses are apparent, it is recommended that the Pressure Vessel Procedure (see 11.2 and 11.2.3) be used. In addition, if the lab decides it wants to minimize or mitigate any evaporation losses associated with the analysis of automotive gasolines (even if the corresponding vapor pressure is ≤ 80 kPa), the option exists for the lab to test samples using the Pressure Vessel Procedure (see 11.2 and 11.2.3).

11.3.2 *For Cleaners (Stoddard) Solvent and Kerosine*—Carry out the test exactly as described in 11.3.1 but at 100 °C ± 1 °C (212 °F ± 2 °F).

11.3.3 *For Lubricating Oil*—Carry out the test exactly as described in 11.3.1, but the tests can be carried out for varying times and at elevated temperatures other than 100 °C (212 °F). For the sake of uniformity, it is suggested that even increments of 5 °C, beginning with 150 °C, be used.

11.4 *Strip Examination:*

11.4.1 Empty the contents of the test tube into a suitably sized receiver. If a receiver made out of glass is used, such as a 150 mL tall-form beaker, let the strip slide in gently so as to avoid breaking the glass. Immediately withdraw the strip with forceps and immerse in wash solvent. Withdraw the strip at once, dry and inspect for evidence of tarnishing or corrosion by comparison with the Copper Strip Corrosion Standards. The step of drying the strip may be done by blotting with filter paper, air drying, or by other suitable means. Hold both the test strip and the standard strip plaque in such a manner that light reflected from them at an angle of approximately 45° will be observed.

11.4.2 In handling the test strip during the inspection and comparison, the danger of marking or staining can be avoided if it is inserted in a flat glass tube (see Appendix X1), which can be stoppered with absorbent cotton.

12. Interpretation of Results

12.1 Interpret the corrosiveness of the sample in accordance with one of the classifications of the ASTM Copper Strip Corrosion Standard as listed in Table 1.

12.1.1 When a strip is in the obvious transition state between that indicated by any two adjacent standard strips, rate the sample at the more tarnished classification. Should a strip appear to have a darker orange color than Standard Strip 1b, consider the observed strip as still belonging in Classification 1; however, if any evidence of red color is observed, the observed strip belongs in Classification 2.

12.1.2 A 2a strip can be mistaken for a 3a strip if the brassy underlay of the 3a strip is completely masked by a magenta overtone. To distinguish, immerse the strip in wash solvent; a 2a strip will appear as a 1b strip, while a 3a strip will not change.

12.1.3 To distinguish a 2c strip from a 3b strip, place a test strip in a 25 mm by 150 mm test tube and bring to a temperature of 340 °C ± 30 °C in 4 min to 6 min with the tube lying on a hot plate. Adjust to temperature by observing a high distillation thermometer inserted into a second test tube. Thus, a 2c strip will assume the color of a 2d strip and successive stages of tarnish; a 3b strip will take on the appearance of a 4a strip.

12.1.4 Repeat the test if blemishes due to fingerprints are observed, or due to spots from any particles or water droplets that may have touched the test strip during the digestion period.

12.1.5 Repeat the test also if the sharp edges along the flat faces of the strip appear to be in a classification higher than the greater portion of the strip; in this case, it is likely that the edges were burnished during preparation (polishing).

TABLE 2 Gasoline Precision Determination

Rating Classification	Both Ratings in One Classification	1 Rating at Classification Boundary (for example, 1b and 2a)
1, 2, 3	1 lettered category within classification	1 lettered category within classification or closest category in the adjacent classification
4	2 lettered categories within classification	2 lettered categories within classification or closest category in the adjacent classification

13. Report

13.1 Report the corrosiveness in accordance with one of the classifications listed in Table 1. State the duration of the test and the test temperature in the following format:

$$\text{Corrosion copper strip } (X\text{h}/Y°\text{C}), \text{ Classification } Zp$$

where:

X = test duration, in hours,
Y = test temperature, °C,
Z = classification category (that is, 1, 2, 3, or 4), and
p = classification description for the corresponding Z (for example, a, b).

13.2 If a pressure vessel was used to analyze automotive gasoline samples specifically (see 11.2.3), report the use of a pressure vessel with the results determined in 13.1.

14. Precision and Bias[4]

14.1 In the case of pass/fail data, no generally accepted method for determining precision is currently available, except for gasoline sample types (see 14.1.1 and 14.1.2) analyzed using the test tube procedure stated in 11.3.1. Bias has not been determined for this test method.

14.1.1 Based on a 2008 gasoline interlaboratory study[4] that was conducted, involving 18 laboratories receiving a randomized set of 12 gasoline samples, it was determined that pre-polished copper strips[5] provided statistically "equivalent" results as compared to manually prepared copper strips (that is, the degree of predictable disagreement between pre-polished and manually polished copper strips was not statistically significant). In addition, the precision information in 14.1.2 was determined by the statistician as part of this study.

14.1.2 Since results by this test method are nonnumerical and involve multi-categoric rating classifications (for example, 1, 2, 3, and 4) and classification descriptions (for example, a, b, c, etc.), conventional D02 statistical techniques, such as Practice D6300, are not suitable for determining precision. Instead, a statistical simulation approach was used to mathematically assess the "degree of disagreement" under repeatability ("r") and reproducibility ("R") conditions for the ILS data set. Based on the statistical approach followed, no statistically significant difference in disagreement percentages between r and R conditions was determined for rating classifications in category 1, 2, and 3. For rating classification 4 however, samples showed more within-classification disagreement. Based on this information, the statistician determined that in the long run, the precision of the analysis (that is, both "r" and "R") is that there is nominally a 5% chance that a difference between any two ratings will exceed the criteria in Table 2.

15. Keywords

15.1 automotive gasoline; aviation gasoline; aviation turbine fuel; copper corrosion; copper strip; corrosiveness to copper; natural gasoline

[5] Available from C&P Catalyst Inc., 2300 Riverside Drive, Unit 16G, Tulsa, OK 74114.

ANNEXES

(Mandatory Information)

A1. COPPER QUALITY

A1.1 Copper Quality

A1.1.1 Hard-temper, cold-finished type-(ETP) electrolytic tough pitch copper.[6]

[6] Conforming to Copper Development Association (CDA), United States of America No. 110, or to British Standard (BS) EN 1652 or BS 4608, which have proper quality.

A2. WARNING STATEMENTS

A2.1 Isooctane

A2.1 Harmful if inhaled. Vapors may cause flash fire.

Keep away from heat, sparks, and open flame.

Keep container closed.

Use with adequate ventilation.

Avoid build-up of vapors and eliminate all sources of ignition, especially nonexplosion-proof electrical apparatus and heaters.

Avoid prolonged breathing of vapor or spray mist.

Avoid prolonged or repeated skin contact.

A2.2 Aviation Turbine Fuel (Jet A or A-1, see Specification D1655)

A2.2 Keep away from heat, sparks, and open flames.

Keep container closed.

Use with adequate ventilation.

Avoid breathing vapor or spray mist.

Avoid prolonged or repeated contact with skin.

A2.3 Gasoline (Containing Lead)

A2.3 Keep away from heat, sparks, and open flame.

Keep container closed.

Use with adequate ventilation.

Avoid build-up of vapors and eliminate all sources of ignition, especially nonexplosion-proof electrical apparatus and heaters.

Avoid prolonged breathing of vapor or spray mist.

Avoid prolonged or repeated skin contact.

A2.4 Gasoline (White or Unleaded)

A2.4 Keep away from heat, sparks, and open flame.

Keep container closed.

Use with adequate ventilation.

Avoid build-up of vapors and eliminate all sources of ignition, especially nonexplosion-proof electrical apparatus and heaters.

Avoid prolonged breathing of vapor or spray mist.

Avoid prolonged or repeated skin contact.

A2.5 Kerosine

A2.5 Keep away from heat, sparks, and open flame.

Keep container closed.

Use with adequate ventilation.

Avoid breathing vapor or spray mist.

Avoid prolonged or repeated contact with skin.

A2.6 Stoddard Solvent

A2.6 Keep away from heat, sparks, and open flame.

Keep container closed.

Use with adequate ventilation.

Avoid prolonged breathing of vapor or spray mist.

Avoid prolonged or repeated skin contact.

APPENDIX

(Nonmandatory Information)

X1. OPTIONAL USEFUL EQUIPMENT

X1.1 Viewing Tube

X1.1.1 A useful flat glass test tube for holding tarnished copper strips for inspection or for storage for later inspection is illustrated and dimensioned in Fig. X1.1.

X1.2 Strip Vise

X1.2.1 A useful and convenient vise for holding up to four copper strips during final polishing is illustrated and dimensioned in Fig. X1.2.

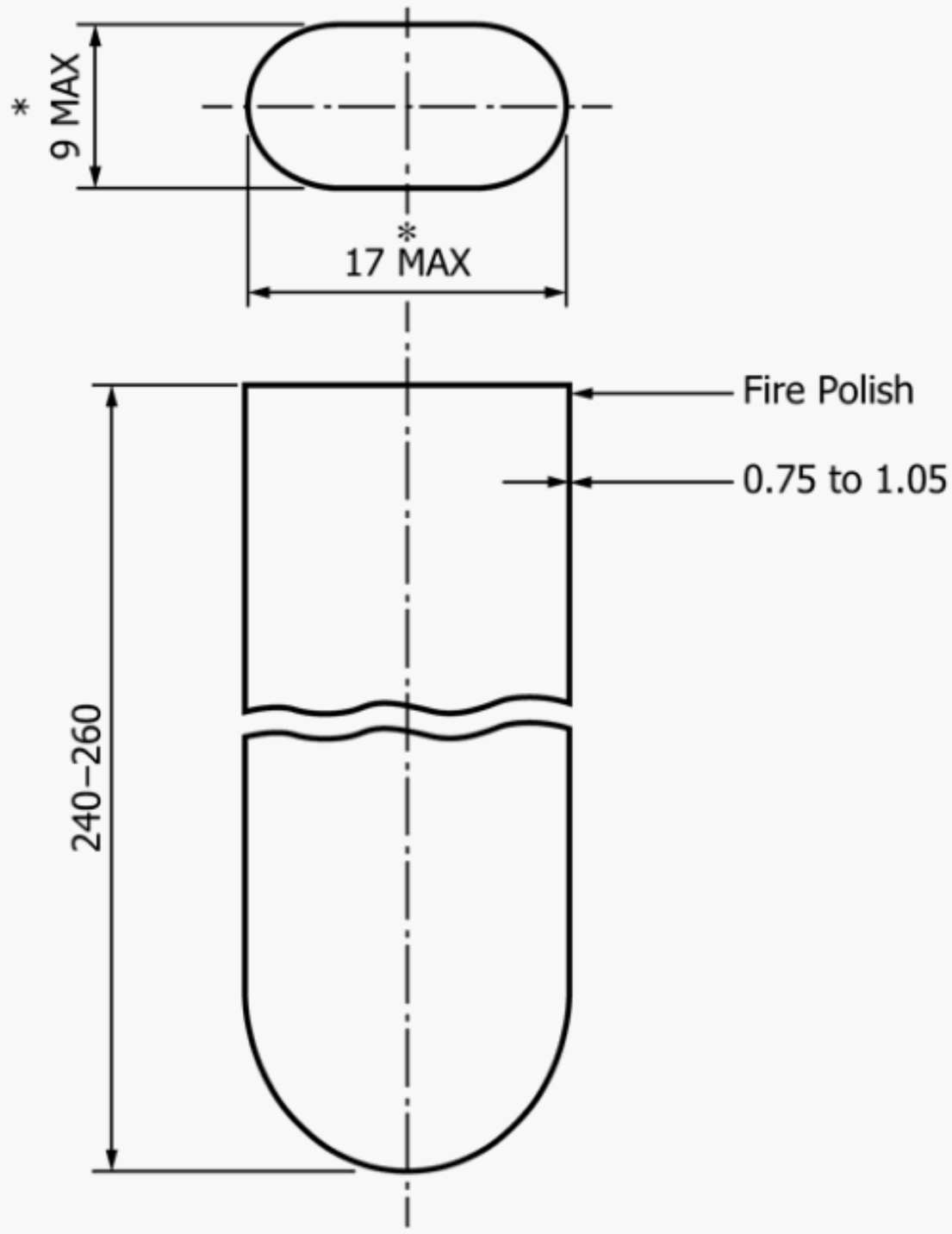

NOTE 1—Dimensions in millimetres.

NOTE 2—The dimensions are the minimum dimensions that shall allow the introduction of a copper strip.

NOTE 3—The tube shall be free of striae or similar defects.

FIG. X1.1 Flat Glass Viewing Test Tube

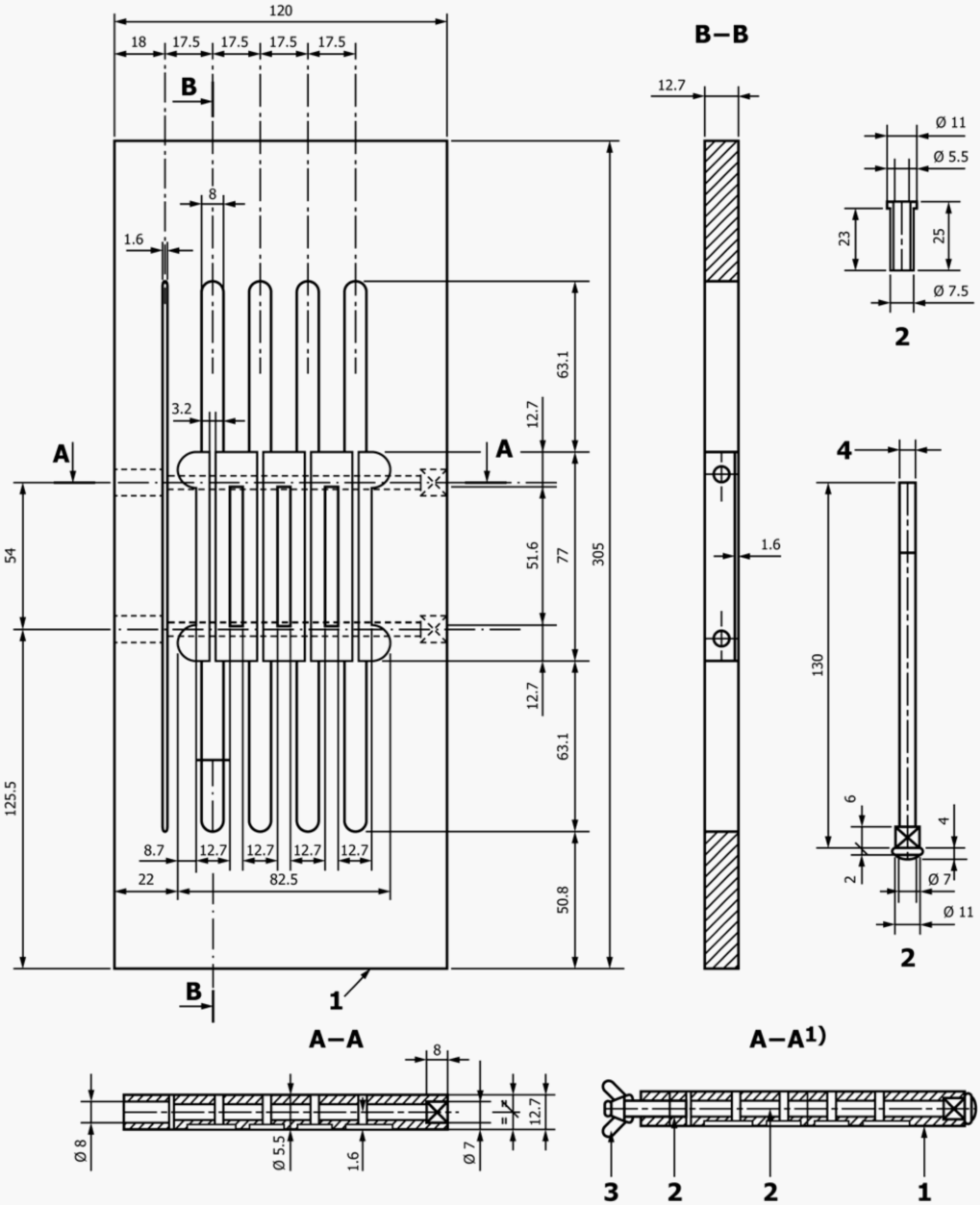

Key:
1 Material: Plastic
2 Material: Brass
3 Wing nut
4 Ø 5-mm metric thread or equivalent

NOTE 1—Dimensions in millimetres.

FIG. X1.2 Multistrip Vise

SUMMARY OF CHANGES

Subcommittee D02.05 has identified the location of selected changes to this standard since the last issue (D130 – 18) that may impact the use of this standard. (Approved May 1, 2019.)

(1) Revised subsections 11.1 and 11.2.

Subcommittee D02.05 has identified the location of selected changes to this standard since the last issue (D130 – 12) that may impact the use of this standard. (Approved April 1, 2018.)

(1) Revised description of adjunct in 8.1.1.2.

ASTM International takes no position respecting the validity of any patent rights asserted in connection with any item mentioned in this standard. Users of this standard are expressly advised that determination of the validity of any such patent rights, and the risk of infringement of such rights, are entirely their own responsibility.

This standard is subject to revision at any time by the responsible technical committee and must be reviewed every five years and if not revised, either reapproved or withdrawn. Your comments are invited either for revision of this standard or for additional standards and should be addressed to ASTM International Headquarters. Your comments will receive careful consideration at a meeting of the responsible technical committee, which you may attend. If you feel that your comments have not received a fair hearing you should make your views known to the ASTM Committee on Standards, at the address shown below.

This standard is copyrighted by ASTM International, 100 Barr Harbor Drive, PO Box C700, West Conshohocken, PA 19428-2959, United States. Individual reprints (single or multiple copies) of this standard may be obtained by contacting ASTM at the above address or at 610-832-9585 (phone), 610-832-9555 (fax), or service@astm.org (e-mail); or through the ASTM website (www.astm.org). Permission rights to photocopy the standard may also be secured from the Copyright Clearance Center, 222 Rosewood Drive, Danvers, MA 01923, Tel: (978) 646-2600; http://www.copyright.com/

Contact ASTM

Call Us

Monday through Friday 8:30am-6:00pm Eastern US Standard Time

Sales & Support

1-877-909-2786 (USA & Canada)

International

001-610-832-9585 (Customer Service)

001-610-832-9578 (Technical Support)

ASTM Headquarters

100 Barr Harbor Drive
P.O. Box C700
West Conshohocken, PA
19428-2959, USA
Tel: +1.610.832.9500
Fax: +1.610.832.9555
service@astm.org
Directions

Washington Office

1850 M Street, NW
Suite 1030
Washington, DC 20036
Jeffrey Grove
Tel: +1.202.223.8505

Latin America Office

EnginZone
Monterosa 233
of. 402 Chacarilla del Estanque
Surco, Lima 33
PERU
Maria Isabel Barrios
Tel: +51 (1) 205-5502

ASTM INTERNATIONAL

Contact ASTM

Call Us

Monday through Friday 8:30am-6:00pm Eastern US Standard Time

Sales & Support

1-877-909-2786 (USA & Canada)

International

001-610-832-9585 (Customer Service)

001-610-832-9578 (Technical Support)

Canada Office

171 Nepean Street, Suite 400
Ottawa, ON K2P 0B4
Diane Thompson
Tel: +1.613.751.3409

Brussels Office

Rue de la Loi 67
B-1040 Brussels,
Belgium
Sara Gobbi
Tel +32.(0)2.8405127

China Office

Suite EF-09, Twin Towers East,
B-12 Jianguomenwai Ave.
Chaoyang District, Beijing, P.R. China
100022
Liu Fei
Tel: +86.10.5109.6033
Fax: +86.10.5109.6039

Contact ASTM

Call Us

Monday through Friday 8:30am-6:00pm Eastern US Standard Time

Sales & Support

1-877-909-2786 (USA & Canada)

International

001-610-832-9585 (Customer Service)

001-610-832-9578 (Technical Support)

Media Contact

Nathan Osburn, Director,
Corporate Communications
Tel: +610.832.9603