This international standard was developed in accordance with internationally recognized principles on standardization established in the Decision on Principles for the Development of International Standards, Guides and Recommendations issued by the World Trade Organization Technical Barriers to Trade (TBT) Committee.

Designation: D5494 – 93 (Reapproved 2018)

Standard Test Method for the Determination of Pyramid Puncture Resistance of Unprotected and Protected Geomembranes[1]

This standard is issued under the fixed designation D5494; the number immediately following the designation indicates the year of original adoption or, in the case of revision, the year of last revision. A number in parentheses indicates the year of last reapproval. A superscript epsilon (ε) indicates an editorial change since the last revision or reapproval.

1. Scope

1.1 The test method is to be used as an index test to determine the pyramid puncture resistance of geomembranes and, or both, geomembranes protected by nonwoven geotextiles and other puncture-protective geosynthetics.

1.2 The test method measures the increase of the pyramid puncture resistance due to the use of protective nonwoven geotextiles with geomembranes.

1.3 The values stated in SI units are to be regarded as the standard value. The values stated in parentheses are provided for information only.

1.4 *This standard does not purport to address all of the safety concerns, if any, associated with its use. It is the responsibility of the user of this standard to establish appropriate safety, health, and environmental practices and determine the applicability of regulatory limitations prior to use.*

1.5 *This international standard was developed in accordance with internationally recognized principles on standardization established in the Decision on Principles for the Development of International Standards, Guides and Recommendations issued by the World Trade Organization Technical Barriers to Trade (TBT) Committee.*

2. Referenced Documents

2.1 *ASTM Standards:*[2]

D76/D76M Specification for Tensile Testing Machines for Textiles

D4354 Practice for Sampling of Geosynthetics and Rolled Erosion Control Products (RECPs) for Testing

D4439 Terminology for Geosynthetics

D4491/D4491M Test Methods for Water Permeability of Geotextiles by Permittivity

3. Terminology

3.1 *Definitions:*

3.1.1 *atmosphere for testing geosynthetics, n*—air maintained at a relative humidity between 50 to 70 % and a temperature of 21 ± 2 °C (70 ± 4 °F).

3.1.2 *geomembrane, n*—an essentially impermeable geosynthetic composed of one or more synthetic sheets.

3.1.2.1 *Discussion*—In geotechnical engineering, "essentially impermeable" means that no measurable liquid flows through a geosynthetic when tested in accordance with Test Methods D4491/D4491M.

3.1.3 *geotextile, n*—a permeable geosynthetic comprised solely of textiles.

3.1.3.1 *Discussion*—Current manufacturing techniques produce nonwoven fabrics, knitted (non-tubular) fabrics, and woven fabrics.

3.1.4 For other terms, see Terminology D4439.

4. Summary of Test Method

4.1 A test specimen is clamped without tension between circular plates of a ring clamp attachment secured in a compression press or tensile testing machine. A force is exerted against the center of the unsupported or supported portion of the test specimen by a solid steel pyramid attached to a load indicator until rupture of the specimen occurs. The maximum load and elongation recorded is the value of the puncture resistance of the specimen.

5. Significance and Use

5.1 The pyramid method of puncture resistance is an index test for the determination of the puncture resistance of unprotected geomembranes or geomembranes protected with nonwoven geotextiles and other puncture-protective geosynthetics.

5.1.1 The purpose of this test method is to establish an index value of puncture resistance by providing standard criteria and a basis for uniform reporting.

5.2 This test method may be used for acceptance testing of commercial shipments of geomembranes and geomembranes protected with nonwoven geotextiles; however, caution is advised since information about between-laboratory precision is incomplete.

[1] This test method is under the jurisdiction of ASTM Committee D35 on Geosynthetics and is the direct responsibility of D35.10 on Geomembranes.

Current edition approved Feb. 1, 2018. Published February 2018. Originally approved in 1993. Last previous edition approved in 2011 as D5494 – 93 (2011). DOI: 10.1520/D5494-93R18.

[2] For referenced ASTM standards, visit the ASTM website, www.astm.org, or contact ASTM Customer Service at service@astm.org. For *Annual Book of ASTM Standards* volume information, refer to the standard's Document Summary page on the ASTM website.

Copyright © ASTM International, 100 Barr Harbor Drive, PO Box C700, West Conshohocken, PA 19428-2959. United States

6. Apparatus

6.1 *Test Setup*—A compression press with a reading force accuracy of at least 2 N (0.5 lb) is necessary. The press must maintain a constant test speed and should be provided with an automatic chart recorder for the force-versus-deformation behavior. A clamping device for the test sample, a special piston, and electrical signal equipment for determining the puncture load are the additional pieces of test equipment needed. Also, a tensile testing machine conforming to the requirements of Specification D76/D76M can be utilized in a compression mode for this test method. The equipment setup shall provide a constant rate of speed, reading accuracy of at least 2 N (0.5 lb). and be provided with an automatic chart recorder for load versus deformation. Additional equipment required by this test method is described below.

6.2 *Clamping Device*—The upper and lower fixing ring clamp, dimensions of which are shown in Fig. 1(a) and (b). The lower fixing ring shall be provided with a circular recess with a diameter corresponding to the external diameter of the compression base. This will facilitate mounting of the lower fixing ring to the compression base as illustrated in Fig. 2. Concentrically arranged grooves shall be located on the lower face of the upper ring and upper face of the lower ring to facilitate nonslip clamping of the test specimen(s).

6.3 *Compression Base* (Fig. 2)—CBR-type test presses are normally equipped with a CBR-cylinder compression base having a diameter of 150 mm (6.0 in.) as shown in Fig. 2. Additionally, the compression base must be deep enough to allow the loading piston to plunge at least 100 mm (4.0 in.). The compression base should be manufactured of rust-resistant, high-grade steel.

6.4 *Underlying Test Media*—Either water or an aluminum plate can be used as the underlying medium for this test method. The water (which serves as an electrical conductor) simulates a nonrigid underlying medium and the aluminum simulates a hard, rigid medium. The aluminum plate (Fig. 3) must be placed on the compression base so that the sealing system (geomembrane and geotextile) lies flat on it. The aluminum plate shall be reinforced (possibly with a steel plate) to prevent bending (Fig. 3).

6.5 *Loading Piston* (Fig. 4)—The loading piston shall be a cylinder with a diameter of 25 ± 0.1 mm (1 ± 0.004 in.) with a polished and hardened pyramid formed apex as shown in Fig. 4. The apex shall be a four-sided pyramid with an apex angle of 90° rounded off with a radius (R) of 0.5 ± 0.01 mm (0.02 ± 0.0004 in.). The edges of the pyramid shall be rounded off with a radius of 0.1 ± 0.01 mm (0.004 ± 0.0004 in.). The transitional edge from the base of the pyramid to the cylinder shall have a radius (R) of 3.0 ± 0.1 mm (0.12 ± 0.004 in.).

6.6 *Electrical Equipment for the Determination of the Puncture Load*—An electrical circuit is to be employed between the loading piston and the underlying medium (water or aluminum plate) such that puncture resistance load at failure can be determined. The electrical circuit, which is closed at the moment of puncture, can be connected to a signal lamp and the puncture resistance load can be recorded at failure.

7. Sampling

7.1 *Lot Sample*—Divide the product into lots and take the lot sample as directed in Practice D4354.

7.2 *Laboratory Sample*—For the laboratory sample, take a swatch extending the full width of the geosynthetic, of sufficient length from each sample roll so that the requirements of 7.3 and Section 9 can be met. Take a sample that will exclude material from the outer wrap and inner wrap around the core, unless the sample is taken at the production site, in which case inner and outer wrap material may be used.

7.3 *Test for Underlying Water Medium*—The test specimen shall be cut out with a punch with a diameter greater than 80 mm or cut out with a large pair of shears.

7.3.1 The sample is fixed between the ring clamps (Figs. 1 and 2) so that no slippage occurs.

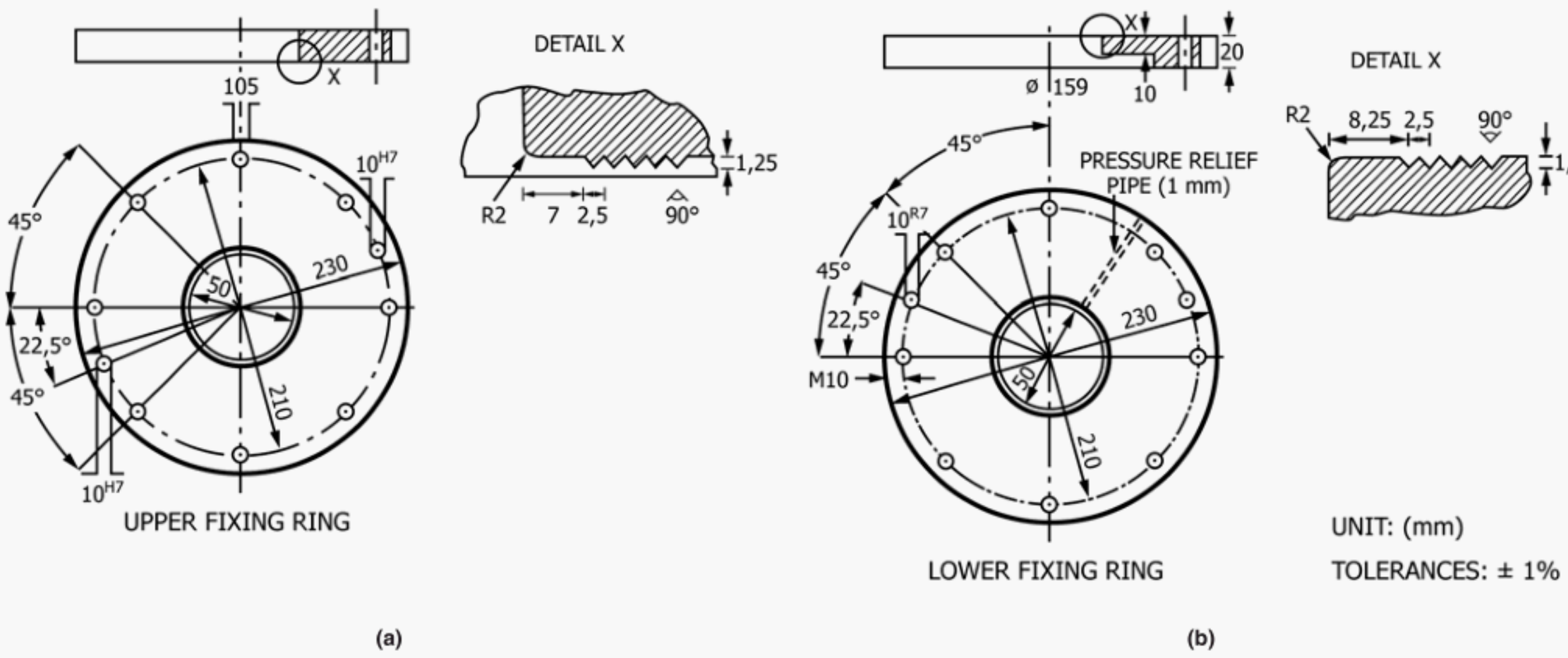

FIG. 1 Upper and Lower Fixing Ring (Only for Underlying Medium Water)

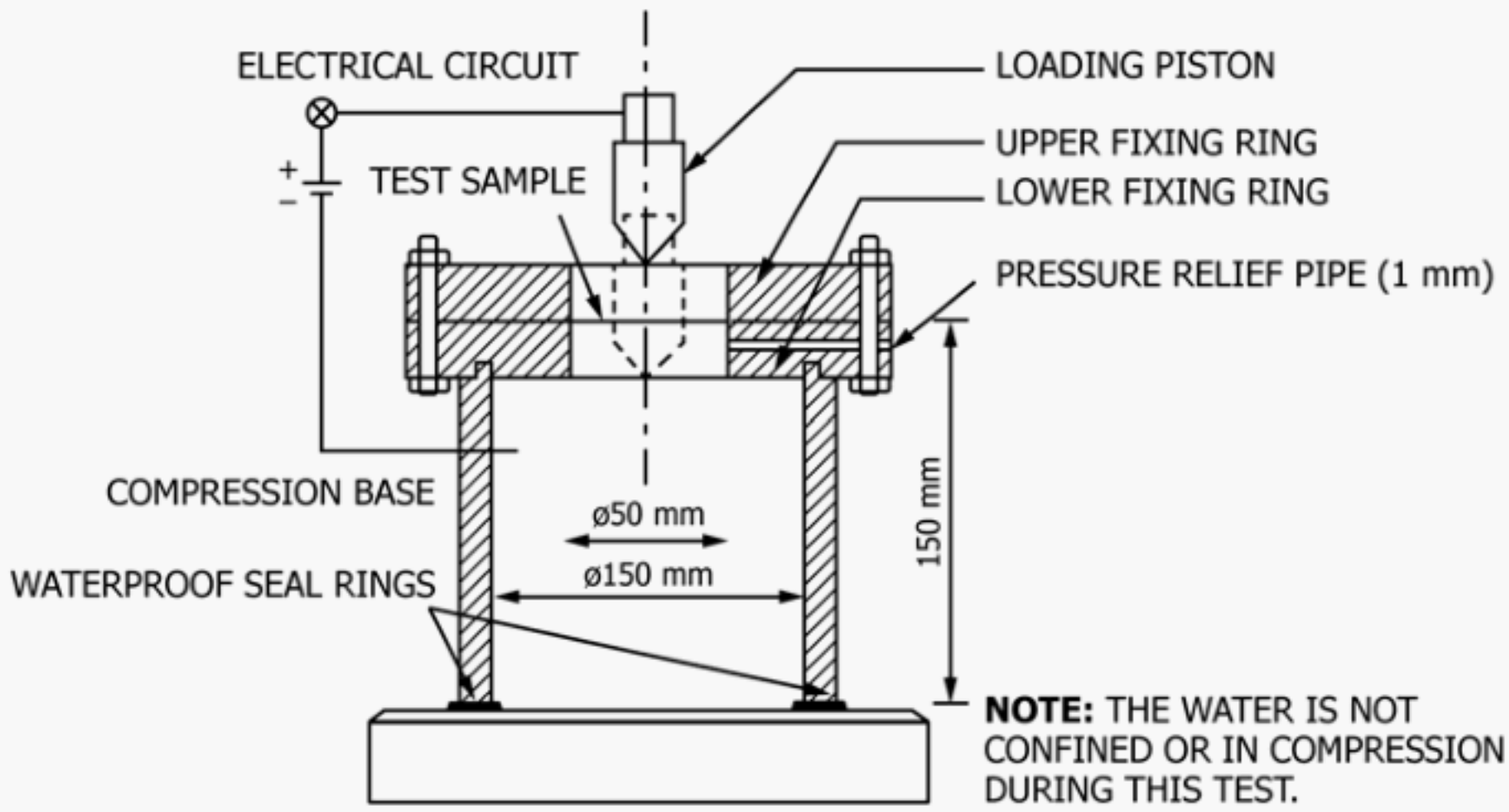

FIG. 2 Method A – Test Configuration for Underlying Water Medium

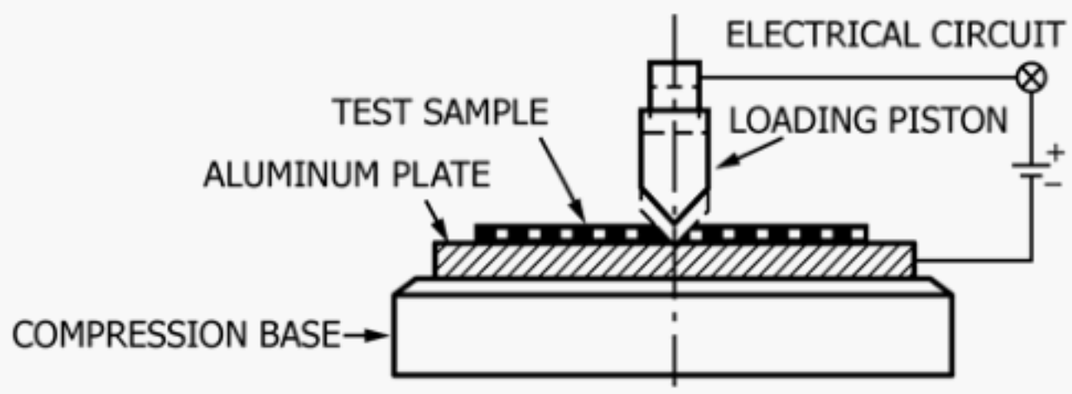

FIG. 3 Method B – Test Configuration for Underlying Aluminum Plate Medium

7.3.2 *For Underlying Aluminum Plate Medium*—Test sample fixing with clamps is not required; deformation of the sample is not induced during testing. With this test condition, any reasonable sample size with a diameter >50 mm (>2 in.) can be tested.

8. Procedure

8.1 Test the conditioned specimens in the standard atmosphere for testing as defined in 3.1.

8.1.1 Select the load range of the tensile/compression testing machine such that the ruptures occur between 10 and 90 % of the full-scale load.

8.1.2 Employ an electrical circuit between the loading piston and the underlying medium (water or aluminum plate).

8.2 *Method A – with Water as the Underlying Medium*—Center and secure the specimen between the ring clamps, ensuring that the test specimen extends to or beyond the outer arranged grooves of the ring clamp.

8.2.1 Test at a machine speed of 50 ± 5 mm/min (2 ± 0.2 in./min) until the puncture resistance load is registered by the electrical equipment as defined in 6.6.

8.2.2 If a specimen slips in the clamps, or, if for any reason attributed to faulty operation the result falls markedly below the average for the set of specimens, discard the result and test another specimen. Continue until the required number of acceptable breaks has been obtained.

8.2.3 *Measurement of Elongation at Break*—Measure the elongation at break of the specimen at the same time as the puncture load is determined (as shown in Fig. 5).

8.3 *Method B – with the Aluminum Plate as the Underlying Medium*—Fixing with clamps is not required; the test specimens lie flat on the aluminum plate (see Fig. 3).

8.3.1 Test at a machine speed of 1 ± 0.1 mm/min (0.04 ± 0.004 in./min) until the puncture load is registered by the electrical equipment as defined in 6.6.

9. Test Conditions

9.1 When the underlying medium is water, a constant puncture resistance load speed of 50 ± 5 mm/min (2.0 ± 0.2 in./min) shall be maintained.

9.2 When the underlying media is an aluminum plate, a constant puncture resistance load speed of 1.0 ± 0.1 mm/min (0.04 ± 0.004 in./min) shall be maintained.

10. Calculation

10.1 The average puncture resistance load in N (lb) is to be determined by at least ten individual tests, both with the underlying water medium and the aluminum plate medium.

10.2 The elongation at break is to be given in percent and can only be evaluated when the underlying medium is water. Evaluation of elongation is shown in Fig. 5.

where:

h = piston movement, in mm, (in.),
a = the distance between the inner edge of the fixing ring and the apex of the pyramid piston before deformation of the test sample, in mm, (in.),
x = the distance between the inner edge of the fixing ring and the apex of the pyramid piston at the moment of reaching perforation, in mm, (in.), and
ε = elongation, in %.

11. Report

11.1 The report shall include the following:

11.1.1 Description of test results.

11.1.2 Test conditions.

11.1.3 The number of tests performed and the average puncture resistance load and the elongation, if applicable.

11.1.4 Identification and description of samples.

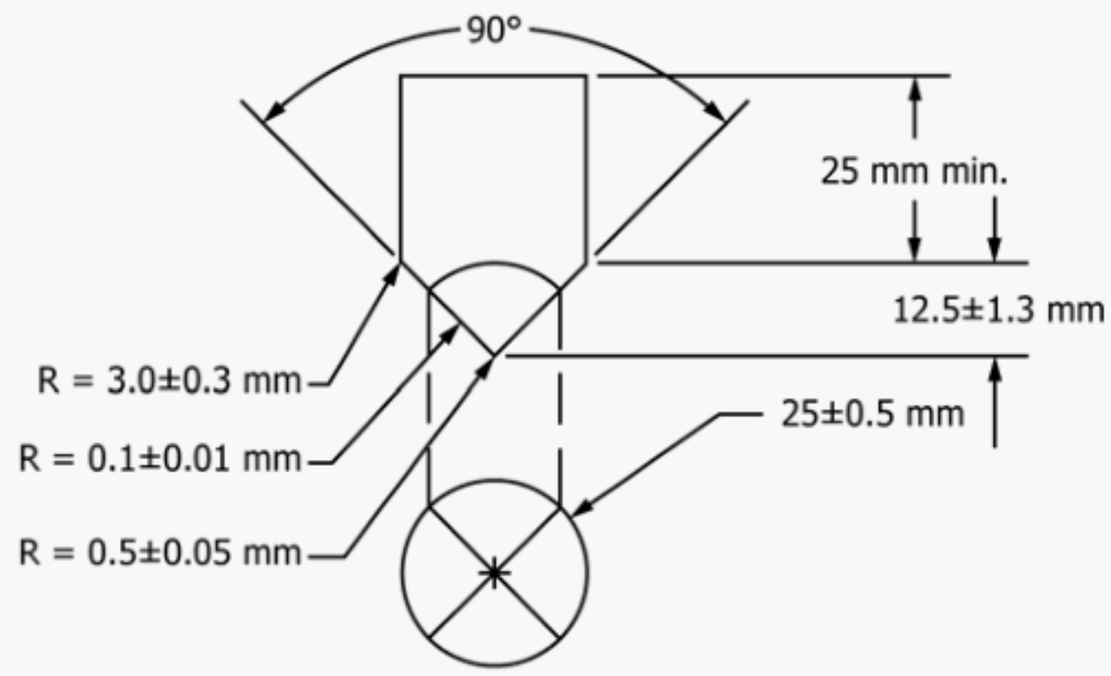

FIG. 4 Loading Piston

FIG. 4 Loading Piston

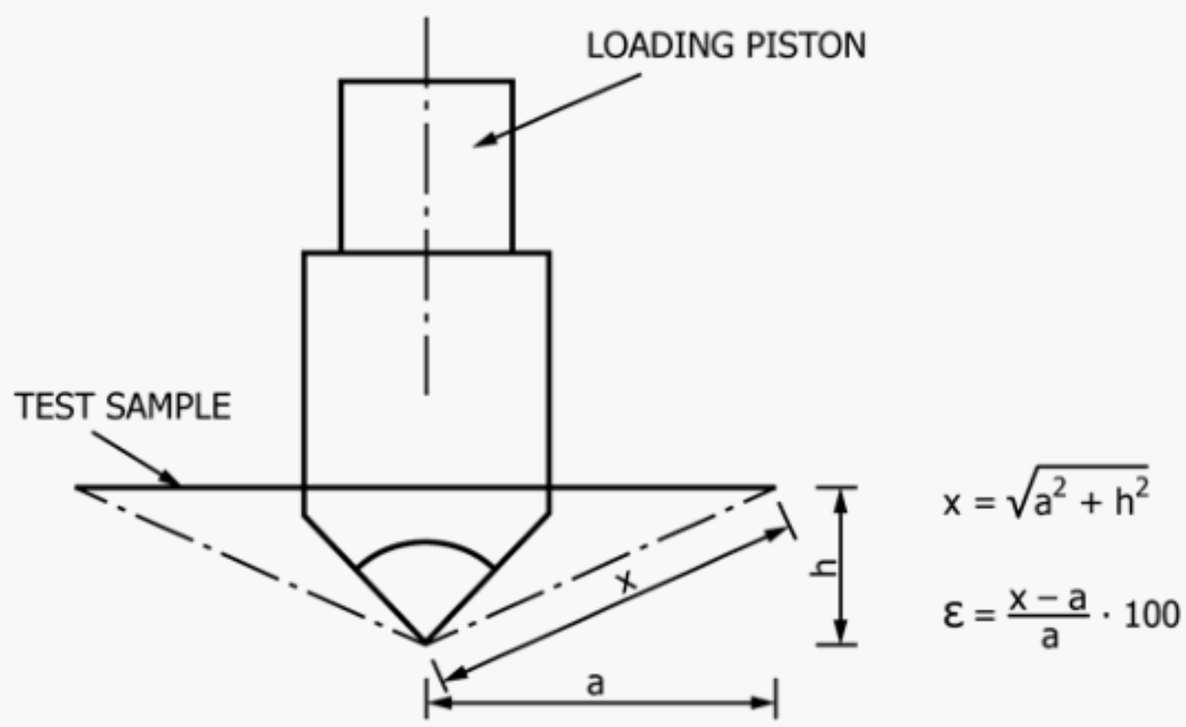

FIG. 5 Deformation for Underlying Water Media

12. Precision and Bias

12.1 *Precision*—The precision of the procedure in this test method is being established.

12.2 *Bias*—No justifiable statement can be made on the bias of the procedure in this test method since the true value cannot be established by accepted reference methods.

12.3 In the event of a dispute arising from differences in reported laboratory acceptance test values resulting from the use of this method, purchasers and suppliers should conduct comparative tests to investigate potential statistical bias between the reporting laboratories. Competent statistical assistance is recommended during this investigation. At a minimum, the two parties should take a homogenous group of test specimens from the lot of material in question. The test specimens should then be randomly assigned in equal numbers to each laboratory for retesting. The average results from the two laboratories should be compared using Student's *t*-test for unpaired data and an acceptable probability level chosen by the two parties before the testing is begun. If a bias is found, either its cause must be found and corrected or the purchaser and supplier must agree to interpret future test results in the light of the known bias.

13. Keywords

13.1 geomembranes; geotextiles; puncture resistance

ASTM International takes no position respecting the validity of any patent rights asserted in connection with any item mentioned in this standard. Users of this standard are expressly advised that determination of the validity of any such patent rights, and the risk of infringement of such rights, are entirely their own responsibility.

This standard is subject to revision at any time by the responsible technical committee and must be reviewed every five years and if not revised, either reapproved or withdrawn. Your comments are invited either for revision of this standard or for additional standards and should be addressed to ASTM International Headquarters. Your comments will receive careful consideration at a meeting of the responsible technical committee, which you may attend. If you feel that your comments have not received a fair hearing you should make your views known to the ASTM Committee on Standards, at the address shown below.

This standard is copyrighted by ASTM International, 100 Barr Harbor Drive, PO Box C700, West Conshohocken, PA 19428-2959, United States. Individual reprints (single or multiple copies) of this standard may be obtained by contacting ASTM at the above address or at 610-832-9585 (phone), 610-832-9555 (fax), or service@astm.org (e-mail); or through the ASTM website (www.astm.org). Permission rights to photocopy the standard may also be secured from the Copyright Clearance Center, 222 Rosewood Drive, Danvers, MA 01923, Tel: (978) 646-2600; http://www.copyright.com/