This international standard was developed in accordance with internationally recognized principles on standardization established in the Decision on Principles for the Development of International Standards, Guides and Recommendations issued by the World Trade Organization Technical Barriers to Trade (TBT) Committee.

Designation: E9 – 09 (Reapproved 2018)

Standard Test Methods of Compression Testing of Metallic Materials at Room Temperature[1]

This standard is issued under the fixed designation E9; the number immediately following the designation indicates the year of original adoption or, in the case of revision, the year of last revision. A number in parentheses indicates the year of last reapproval. A superscript epsilon (ε) indicates an editorial change since the last revision or reapproval.

This standard has been approved for use by agencies of the U.S. Department of Defense.

1. Scope

1.1 These test methods cover the apparatus, specimens, and procedure for axial-load compression testing of metallic materials at room temperature (Note 1). For additional requirements pertaining to cemented carbides, see Annex A1.

NOTE 1—For compression tests at elevated temperatures, see Practice E209.

1.2 The values stated in inch-pound units are to be regarded as standard. The values given in parentheses are mathematical conversions to SI units that are provided for information only and are not considered standard.

1.3 *This standard does not purport to address all of the safety concerns, if any, associated with its use. It is the responsibility of the user of this standard to establish appropriate safety, health, and environmental health practices and determine the applicability of regulatory limitations prior to use.*

1.4 *This international standard was developed in accordance with internationally recognized principles on standardization established in the Decision on Principles for the Development of International Standards, Guides and Recommendations issued by the World Trade Organization Technical Barriers to Trade (TBT) Committee.*

2. Referenced Documents

2.1 *ASTM Standards:*[2]

B557 Test Methods for Tension Testing Wrought and Cast Aluminum- and Magnesium-Alloy Products

E4 Practices for Force Verification of Testing Machines

E6 Terminology Relating to Methods of Mechanical Testing

E83 Practice for Verification and Classification of Extensometer Systems

E111 Test Method for Young's Modulus, Tangent Modulus, and Chord Modulus

E171/E171M Practice for Conditioning and Testing Flexible Barrier Packaging

E177 Practice for Use of the Terms Precision and Bias in ASTM Test Methods

E209 Practice for Compression Tests of Metallic Materials at Elevated Temperatures with Conventional or Rapid Heating Rates and Strain Rates

E251 Test Methods for Performance Characteristics of Metallic Bonded Resistance Strain Gages

E691 Practice for Conducting an Interlaboratory Study to Determine the Precision of a Test Method

3. Terminology

3.1 *Definitions:* The definitions of terms relating to compression testing and room temperature in Terminology E6 and Practice E171/E171M, respectively, shall apply to these test methods.

3.2 *Definitions of Terms Specific to This Standard:*

3.2.1 *buckling*—In addition to compressive failure by crushing of the material, compressive failure may occur by (*1*) elastic instability over the length of a column specimen due to nonaxiality of loading, (*2*) inelastic instability over the length of a column specimen, (*3*) a local instability, either elastic or inelastic, over a small portion of the gage length, or (*4*) a twisting or torsional failure in which cross sections rotate over each other about the longitudinal specimen axis. These types of failures are all termed *buckling*.

3.2.2 *column*—a compression member that is axially loaded and that may fail by buckling.

3.2.3 *radius of gyration*—the square root of the ratio of the moment of inertia of the cross section about the centroidal axis to the cross-sectional area:

$$\rho = (I/A)^{1/2} \quad (1)$$

where:

ρ = radius of gyration,

[1] These test methods are under the jurisdiction of ASTM Committee E28 on Mechanical Testing and are the direct responsibility of Subcommittee E28.04 on Uniaxial Testing.

Current edition approved Jan. 1, 2018. Published January 2018. Originally published in 1924. Last previous edition approved in 2009 as E9-09. DOI: 10.1520/E0009-09R18.

[2] For referenced ASTM standards, visit the ASTM website, www.astm.org, or contact ASTM Customer Service at service@astm.org. For *Annual Book of ASTM Standards* volume information, refer to the standard's Document Summary page on the ASTM website.

Copyright © ASTM International, 100 Barr Harbor Drive, PO Box C700, West Conshohocken, PA 19428-2959. United States

I = moment of inertia of the cross section about centroidal axis (for specimens without lateral support, the smaller value of I is the critical value), and
A = cross-sectional area.

3.2.4 *critical stress*—the axial uniform stress that causes a column to be on the verge of buckling. The critical load is calculated by multiplying the critical stress by the cross-section area.

3.2.5 *buckling equations*—If the buckling stress is less than or equal to the proportional limit of the material its value may be calculated using the Euler equation:

$$S_{cr} = C\pi^2 E/(L/\rho)^2 \quad (2)$$

If the buckling stress is greater than the proportional limit of the material its value may be calculated from the modified Euler equation:

$$S_{cr} = C\pi^2 E_t/(L/\rho)^2 \quad (3)$$

where:

S_{cr} = critical buckling stress,
E = Young's modulus,
E_t = tangent modulus at the buckling stress,
L = column length, and
C = end-fixity coefficient.

Methods of calculating the critical stress using Eq 3 are given in Ref (**1**).[3]

3.2.6 *end-fixity coefficient*—There are certain ideal specimen end-fixity conditions for which theory will define the value of the constant C (see Fig. 1). These values are:

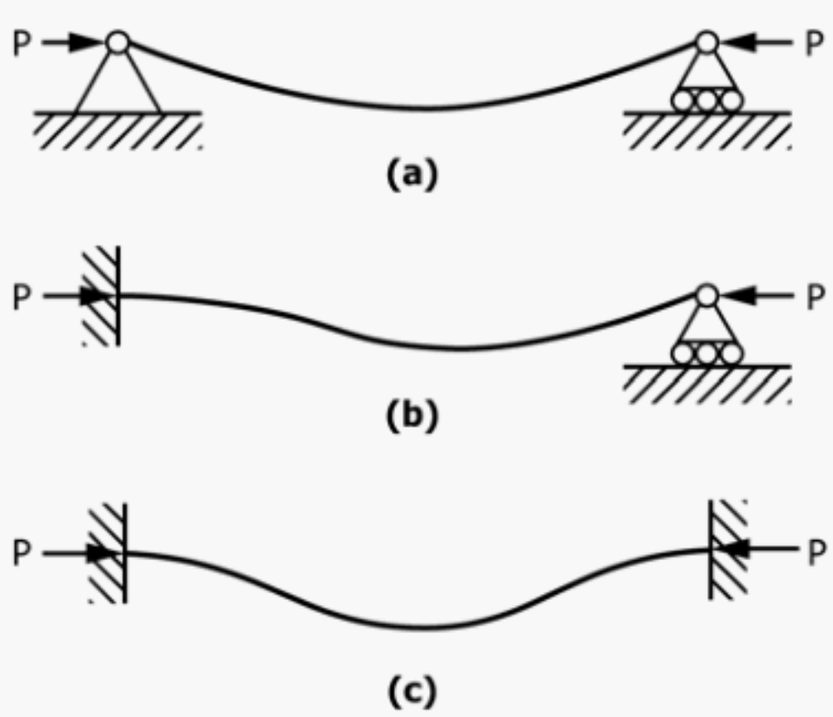

FIG. 1 Diagrams Showing Fixity Conditions and Resulting Buckling of Deformation

Freely rotating ends (pinned or hinged)	$C = 1$ (*a*)
One end fixed, the other free to rotate	$C = 2$ (*b*)
Both ends fixed	$C = 4$ (*c*)

NOTE 2—For flat-end specimens tested between flat rigid anvils, it was shown in Ref (**1**) that a value of $C = 3.75$ is appropriate.

3.2.7 *barreling*—restricted deformation of the end regions of a test specimen under compressive load due to friction at the specimen end sections and the resulting nonuniform transverse deformation as shown schematically and in the photograph in Fig. 2. Additional theoretical and experimental information on barreling as illustrated in Fig. 2 is given in Ref (**2**).

4. Summary of Test Methods

4.1 The specimen is subjected to an increasing axial compressive load; both load and strain may be monitored either continuously or in finite increments, and the mechanical properties in compression determined.

5. Significance and Use

5.1 *Significance*—The data obtained from a compression test may include the yield strength, the yield point, Young's modulus, the stress-strain curve, and the compressive strength (see Terminology E6). In the case of a material that does not fail in compression by a shattering fracture, compressive strength is a value that is dependent on total strain and specimen geometry.

5.2 *Use*—Compressive properties are of interest in the analyses of structures subject to compressive or bending loads or both and in the analyses of metal working and fabrication processes that involve large compressive deformation such as forging and rolling. For brittle or nonductile metals that fracture in tension at stresses below the yield strength, compression tests offer the possibility of extending the strain range of the stress-strain data. While the compression test is not complicated by necking as is the tension test for certain metallic materials, buckling and barreling (see Section 3) can complicate results and should be minimized.

6. Apparatus

6.1 *Testing Machines*—Machines used for compression testing shall conform to the requirements of Practices E4. For universal machines with a common test space, calibration shall be performed in compression.

6.1.1 The bearing surfaces of the heads of the testing machine shall be parallel at all times with 0.0002 in./in. (m/m) unless an alignment device of the type described in 6.3 is used.

6.2 *Bearing Blocks:*

6.2.1 Both ends of the compression specimen shall bear on blocks with surfaces flat and parallel within 0.0002 in./in. (m/m). Lack of initial parallelism can be overcome by the use of adjustable bearing blocks (Note 3). The blocks shall be made of, or faced with, hard material. Current laboratory practice suggests the use of tungsten carbide when testing steel and hardened steel blocks (55 HRC or greater) and when testing nonferrous materials such as aluminum, copper, etc. The specimen must be carefully centered with respect to the testing machine heads or the subpress if used (see 6.3, Alignment Device/Subpress).

NOTE 3—The purpose of an adjustable bearing block is to give the specimen as even a distribution of initial load as possible. An adjustable bearing block cannot be relied on to compensate for any tilting of the heads that may occur during the test.

6.2.2 The bearing faces of adjustable bearing blocks that contact the specimen shall be made parallel before the load is applied to the specimen. One type of adjustable bearing block

[3] The boldface numbers in parentheses refer to the list of references at the end of this standard.

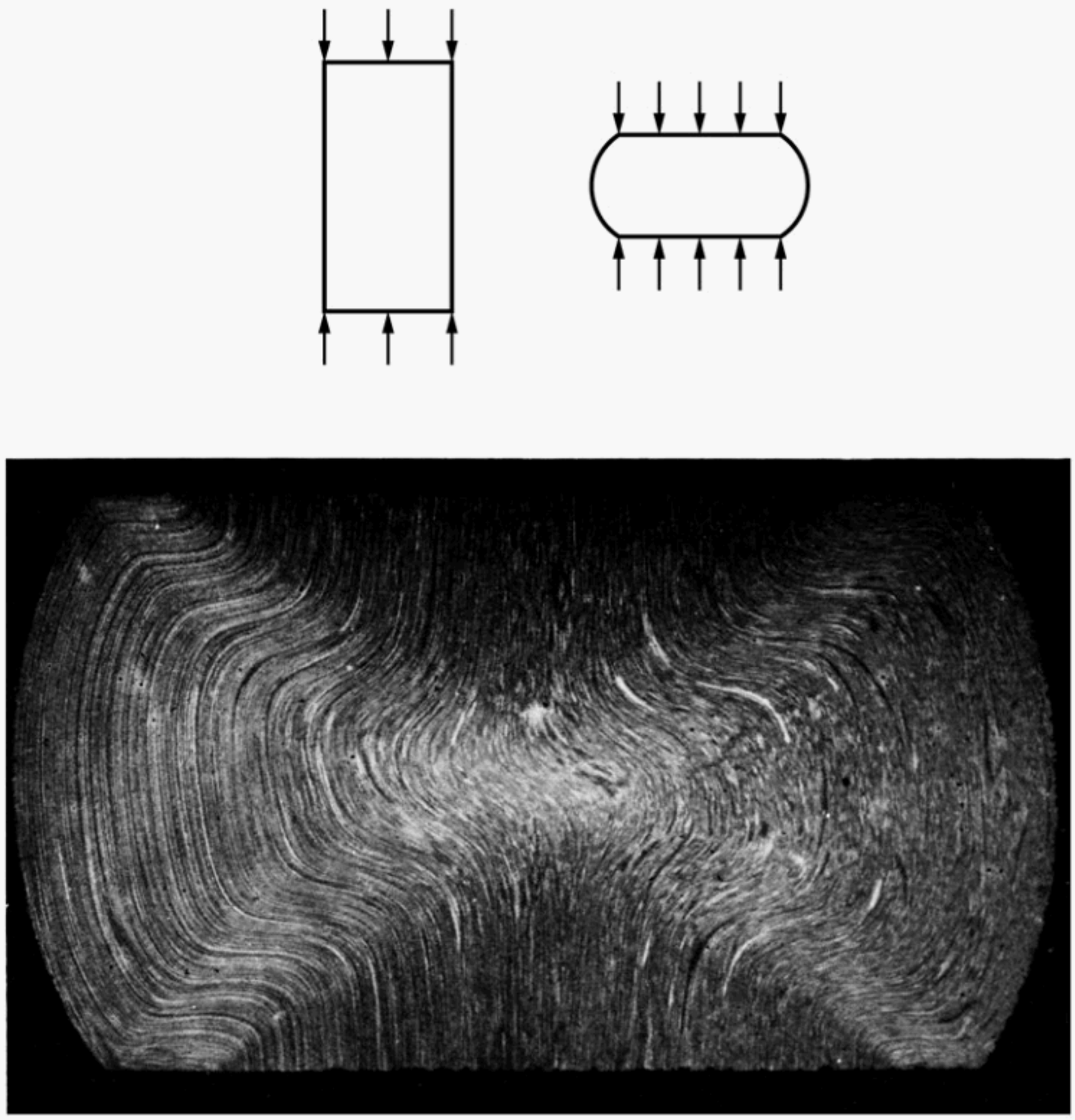

NOTE 1—A cylindrical specimen of AISI 4340 steel (HRC = 40) was compressed 57 % (see upper diagram). The photo macrograph was made of a polished and etched cross section of the tested specimen. The highly distorted flow lines are the result of friction between the specimen ends and the loading fixture. Note the triangular regions of restricted deformation at the ends and the cross-shaped zone of severe shear.

FIG. 2 Illustration of Barreling

that has proven satisfactory is illustrated in Fig. 3. Another arrangement involving the use of a spherical-seated bearing block that has been found satisfactory for testing material other than in sheet form is shown in Fig. 4. It is desirable that the spherical-seated bearing block be at the upper end of the test specimen (for specimens tested with the load axis vertical). The spherical surface of the block shall be defined by a radius having its point of origin in the flat surface that bears on the specimen.

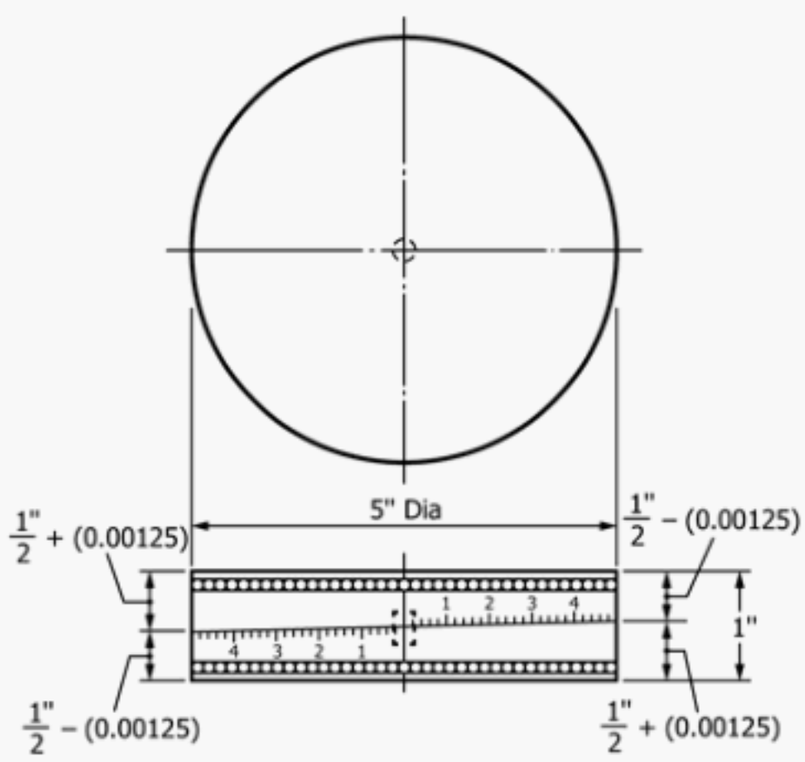

FIG. 3 Adjustable Bearing Block for Compression Testing

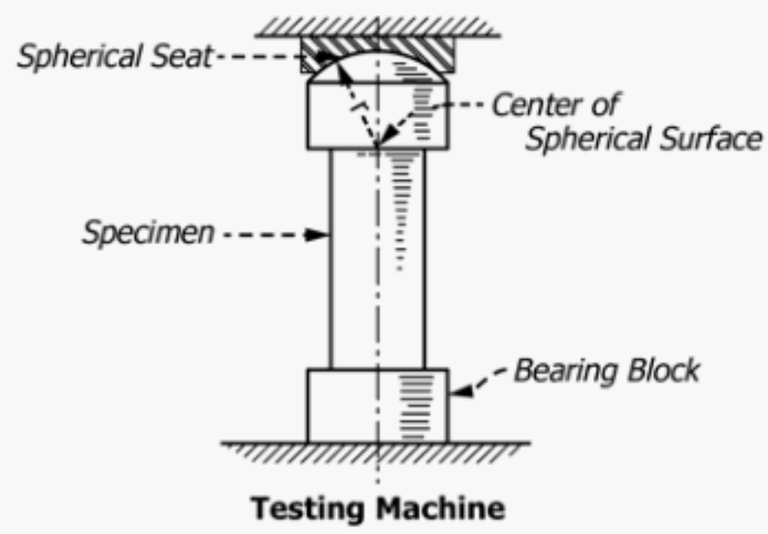

FIG. 4 Spherical-Seated Bearing Block

6.3 *Alignment Device/Subpress:*

6.3.1 It is usually necessary to use an alignment device, unless the testing machine has been designed specifically for axial alignment. The design of the device or subpress depends on the size and strength of the specimen. It must be designed so that the ram (or other moving parts) does not jam or tilt the device or the frame of the machine as a result of loading. The bearing blocks of the device shall have the same requirements for parallelism and flatness as given in 6.2.1.

6.3.2 The primary requirements of all alignment devices are that the load is applied axially, uniformly, and with negligible "slip-stick" friction. An alignment device that has been found suitable is shown in Fig. 5 and described in Ref. (**3**). Other devices of the subpress type have also been used successfully.

6.4 *Compression Testing Jigs*—In testing thin specimens, such as sheet material, some means should be adopted to prevent the specimen from buckling during loading. This may be accomplished by using a jig containing side-support plates that bear against the wide sides of the specimen. The jig must afford a suitable combination of lateral-support pressure and spring constant to prevent buckling, but without interfering with axial deformation of the specimen. Although suitable combinations vary somewhat with variations in specimen material and thickness, testing temperatures, and accuracy of alignment, acceptable results can be obtained with rather wide ranges of lateral-support pressure and spring constant. Generally, the higher the spring constant of the jig, the lower the lateral-support pressure that is required. Proper adjustments of these variables should be established during the qualification of the equipment (see 6.6).

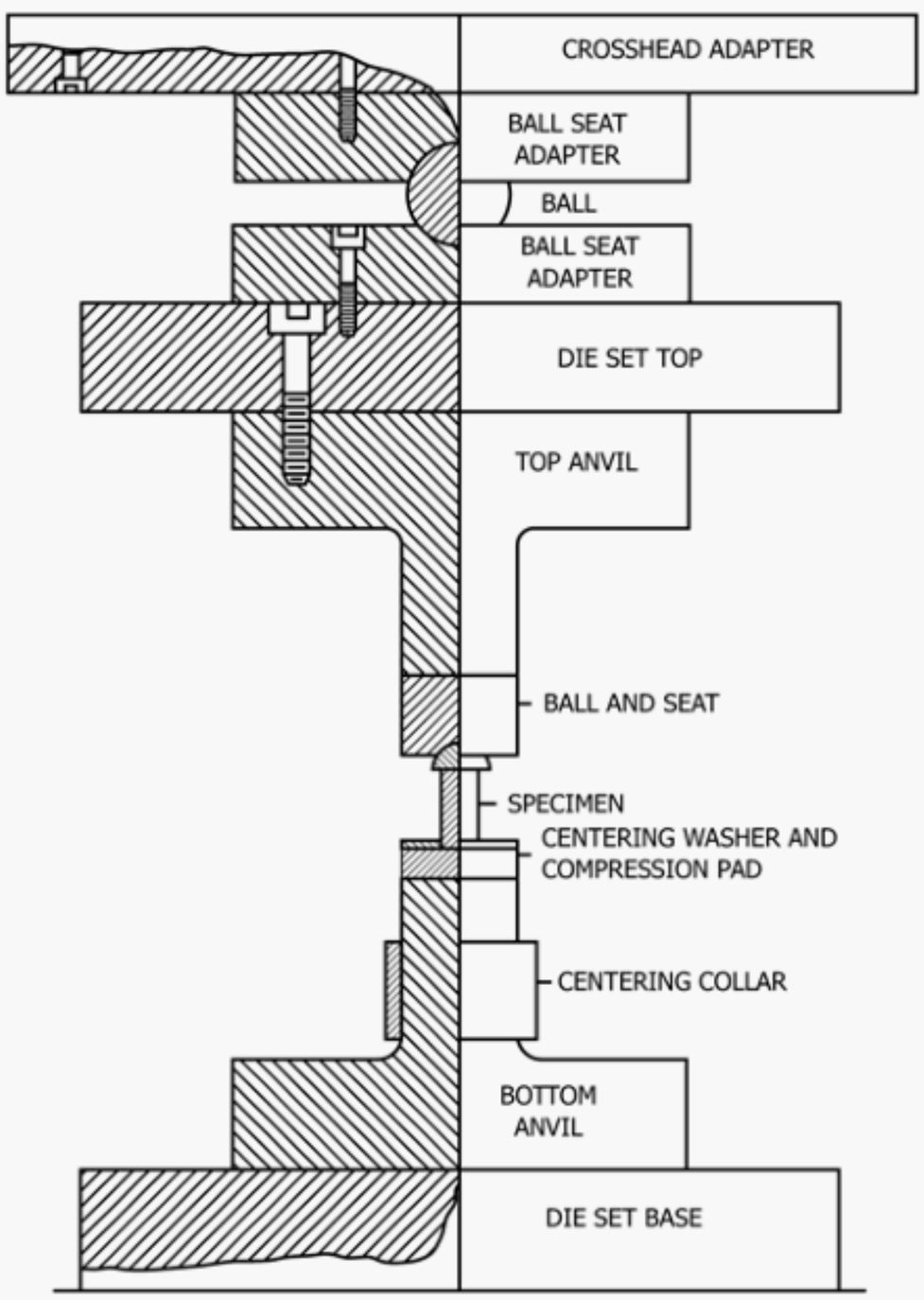

FIG. 5 Example of Compression Testing Apparatus

6.4.1 It is not the intent of these methods to designate specific jigs for testing sheet materials, but merely to provide a few illustrations and references to jigs that have been used successfully, some of which are cited in Table 1. Other jigs are acceptable provided they prevent buckling and pass the qualification test set forth in 6.6. Compression jigs generally require that the specimen be lubricated on the supported sides to prevent extraneous friction forces from occurring at the support points.

6.5 *Strain Measurements:*

6.5.1 Mechanical or electromechanical devices used for measuring strain shall comply with the requirements for the applicable class described in Practice E83. The device shall be verified in compression.

6.5.2 Electrical-resistance strain gages (or other single-use devices) may be used provided the measuring system has been verified and found to be accurate to the degree specified in Practice E83. The characteristics of electrical resistance strain gages have been determined from Test Methods E251.

6.6 *Qualification of Test Apparatus*—The complete compression-test apparatus, which consists of the testing machine and when applicable, one or more of the following; the alignment device, the jig and the strain-measurement system, shall be qualified as follows:

6.6.1 Conduct tests to establish the elastic modulus of five replicate specimens of 2024-T3 aluminum alloy sheet or 2024-T4 aluminum alloy bar in accordance with Test Method E111. These qualification specimens shall be machined from sheet or bar in the location specified in Test Methods B557. The thickness of the sheet or diameter of the bar may be machined to the desired thickness or diameter. It is essential that the extensometer be properly seated on the specimens when this test is performed. When the qualification specimens each provide a modulus value of 10.7×10^6 psi (73.8 GPa) ± 5 %, the apparatus qualifies.

6.6.2 The qualification procedure shall be performed using the thinnest rectangular specimen or smallest diameter round specimen to be tested in the apparatus.

7. Test Specimens

7.1 *Specimens in Solid Cylindrical Form*—It is recommended that, where feasible, compression test specimens be in the form of solid circular cylinders. Three forms of solid cylindrical test specimens for metallic materials are recognized, and designated as short, medium-length, and long (Note 4). Suggested dimensions for solid compression test specimens for general use are given in Table 2.

NOTE 4—Short specimens typically are used for compression tests of such materials as bearing metals, which in service are used in the form of thin plates to carry load perpendicular to the surface. Medium-length specimens typically are used for determining the general compressive strength properties of metallic materials. Long specimens are best adapted for determining the modulus of elasticity in compression of metallic materials. The specimen dimensions given in Table 2 have been used successfully. Specimens with a *L/D* (length/diameter ratio) of 1.5 or 2.0 are best adapted for determining the compressive strength of high-strength materials.

TABLE 1 Representative Compression Jigs and Specimen Dimensions for Testing of Thin Sheet[A]

Type of Jig	Ref	Thickness		Width		Length		Gage Length	
		in.	mm	in.	mm	in.	mm	in.	mm
Montgomery-Templin:	(4 and 5)								
General use		0.016 and over	0.40 and over	0.625	16.0	2.64	67.0	1	25
Magnesium alloys		0.016 and over	0.40 and over	0.750[B]	20.0	2.64	67.0	1	25
NACA (Kotanchik et al)	(6)	0.020 and over	0.50 and over	0.53	13.6	2.53	64.5	1	25
Moore-McDonald	(7)	0.032 and over	0.80 and over	0.75[C]	20.0	2.64	67.0	1	25
LaTour-Wolford	(8)	0.010 to 0.020	0.25 to 0.50	0.50	12.5	1.95	49.5	1	25
		0.020 and over	0.50 and over	0.50	12.5	2.00	51.0	1	25
Miller	(9-11)	0.006 to 0.010	0.15 to 0.25	0.48	12.2	2.22	56.5	1	25
		0.010 to 0.020	0.25 to 0.50	0.50	12.5	2.23	56.5	1	25
		0.020 and over	0.50 and over	0.50	12.5	2.25	57.0	1	25
Sandorff-Dillon:	(12)								
General use		0.010 and over	0.25 and over	0.50	12.5	4.12	104.5	2	50
High-strength steel		0.010 and over	0.25 and over	0.50	12.5	3.10	78.5	2	50

[A] See Ref. (13) for additional jigs and specimen dimensions.
[B] Reduced to 0.625 in. (16.0 mm) for 1.25 in. (30 mm) at the mid-length.
[C] Reduced to 0.650 in. (16.5 mm) for 1.25 in. (30 mm) at the mid-length.

TABLE 2 Suggested Solid Cylindrical Specimens[A]

NOTE 1—Metric units represent converted specimen dimensions close to, but not the exact conversion from inch-pound units.

Specimens	Diameter		Length		Approx *L/D* Ratio
	in.	mm	in.	mm	
Short	1.12 ± 0.01	30.0 ± 0.2	1.00 ± 0.05	25 ± 1	0.8
	0.50 ± 0.01	13.0 ± 0.2	1.00 ± 0.05	25 ± 1	2.0
Medium	0.50 ± 0.01	13.0 ± 0.2	1.50 ± 0.05	38 ± 1	3.0
	0.80 ± 0.01	20.0 ± 0.2	2.38 ± 0.12	60 ± 3	3.0
	1.00 ± 0.01	25.0 ± 0.2	3.00 ± 0.12	75 ± 3	3.0
	1.12 ± 0.01	30.0 ± 0.2	3.38 ± 0.12	85 ± 3	3.0
Long	0.80 ± 0.01	20.0 ± 0.2	6.38 ± 0.12	160 ± 3	8.0
	1.25 ± 0.01	32.0 ± 0.2	12.50 min	320 min	10.0

[A] Other length-to-diameter ratios may be used when the test is for compressive yield strength.

7.2 *Rectangular or Sheet-Type Specimens*—Test specimens shall be flat and preferably of the full thickness of the material. Where lateral support is necessary, the width and length are dependent upon the dimensions of the jig used to support the specimen. The length shall be sufficient to allow the specimen to shorten the amount required to define the yield strength, or yield point, but not long enough to permit buckling in the unsupported portion. Specimen dimensions and the various types of jigs are given in Table 1.

7.3 *Preparation of Specimens*—Lateral surfaces in the gage length shall not vary in diameter, width, or thickness by more than 1 % or 0.002 in. (0.05 mm), whichever is less. (If a reduced section is used, this requirement applies only to the surface of the reduced section.) Also, the centerline of all lateral surfaces of the specimens shall be coaxial within 0.01 in. (0.25 mm).

7.3.1 *Surface Finish*—Machined surfaces of specimens shall have a surface finish of 63 µin. (1.6 µm) or better. Machined lateral surfaces to which lateral support is to be applied shall be finished to at least 40 microinches (1.0 µm) arithmetic average.

7.3.2 *Flatness and Parallelism*—The ends of a specimen shall be flat and parallel within 0.0005 in./in. (mm/mm) and perpendicular to the lateral surfaces to within 3' of arc. In most cases this requirement necessitates the machining or grinding of the ends of the specimen.

7.3.3 *Edges of Rectangular Specimens*—A width of material equal to at least the thickness of the specimen shall be machined from all sheared or stamped edges in order to remove material whose properties may have been altered. If a reduced section is used, this requirement applies only to the edges of the reduced section. Specimens shall be finished so that the surfaces are free of nicks, grooves, and burrs.

7.4 *Gage Length Location*—The ends of the gage length shall not be closer to the ends of the specimen or ends of the reduced section than one half of the width or diameter of the specimen.

8. Procedure

8.1 *Specimen Measurement*—Measure the width and thickness, or the diameter of the specimen with a micrometer along the gage section. Specimen dimensions greater than 0.10 in. (2.5 mm) should be measured to the nearest 0.001 in. (0.02 mm), and those less than 0.10 in. (2.5 mm) should be determined to the nearest 1 % of the dimension being measured. Calculate the average cross-sectional area of the specimen gage section.

8.2 *Cleaning*—Clean the ends of the specimen and fixture bearing blocks with acetone or another suitable solvent to remove all traces of grease and oil.

8.3 *Lubrication*—Bearing surface friction can affect test results (see section 5.2 and Fig. 2). Friction has been successfully reduced by lubricating the bearing surfaces with TFE-fluorocarbon sheet, molybdenum disulfide, and other materials summarized in Ref. (3).

8.4 *Specimen Installation*—Place the specimen in the test fixture and carefully align the specimen to the fixture to ensure concentric loading. Also, check that the specimen loading/reaction surfaces mate with the respective surfaces of the fixture. If the fixture has side supports, the specimen sides should contact the support mechanism with the clamping pressure recommended by the fixture manufacturer, or as determined during the fixture verification tests. If screws are

used to adjust side support pressure, it is recommended that a torque wrench be utilized to ensure consistent pressure.

8.4.1 *Transducer Attachment*—If required, attach the extensometer or other transducers, or both, to the specimen gage section. The gage length must be at least one half or preferably one diameter away from the ends of the specimen (see 7.4).

8.5 *Load-Strain Range Selection*—Set the load range of the testing machine so the maximum expected load is at least one third of the range selected. Select the strain or deflection scale so that the elastic portion of the load-versus-strain or load-versus-deflection plot on the autographic record, is between 30° and 60° to the load axis.

8.6 *Strain Measurements*—Devices used for measuring strain shall comply with the requirements for the applicable class of extensometer described in Practice E83. Electrical strain gages, if used, shall have performance characteristics established by the manufacturer in accordance with Test Methods E251.

8.7 *Testing Speed*—For testing machines equipped with strain-rate pacers, set the machine to strain the specimen at a rate of 0.005 in./in.·min (m/m·min). For machine with load control or with crosshead speed control, set the rate so the specimen is tested at a rate equivalent to 0.005 in./in.·min (m/m·min) strain-rate in the elastic portion. A rate of 0.003 in./in.·min (m/m·min) can be used if the material is strain-rate sensitive.

8.7.1 For machines without strain-pacing equipment or automatic feedback control systems, maintain a constant crosshead speed to obtain the desired average strain-rate from the start of loading to the end point of the test. The average strain-rate can be determined from a time-interval-marked load-strain record, a time-strain graph, or from the time of the start of loading to the end point of test as determined from a time-measuring device (for example, stopwatch). It should be recognized that the use of machines with constant rate of crosshead movement does not ensure constant strain rate throughout a test.

8.7.2 It should also be noted that the free-running crosshead speed may differ from the speed under load for the same machine setting, and that specimens of different stiffnesses may also result in different rates, depending upon the test machine and fixturing. Whatever the method, the specimen should be tested at a uniform rate without reversals or sudden changes. The test rate must also be such that the rate of load change on the specimen being tested will be within the dynamic response of the measuring systems. This requirement is of particular importance when testing short specimens of high-modulus materials.

8.8 *Test Conduct*—After the specimen has been installed and aligned, and the strain- or deflection-measuring transducer installed, activate the recording device(s) and initiate the test at the prescribed rate. Continue the test at a uniform rate until the test has been completed as stated below.

8.8.1 *Ductile Materials*—For ductile materials, the yield strength or yield point, and sometimes the strength at a strain greater than the yield strain, can be determined. The conduct of the test to determine either the onset of yielding or the compressive strength or both is the same. Materials without sharp-kneed stress-strain diagrams will require that the strain or deflection at yield be initially estimated, and the specimen tested sufficiently beyond the initial estimation to be sure the yield stress can be determined after the test (see 9.3). For materials that exhibit a sharp-kneed stress-strain curve or a distinctive yield point, the test can be terminated either after a sharp knee or after the drop in load is observed.

8.8.2 *Brittle Materials*—Brittle materials that fail by crushing or shattering may be tested to failure.

8.9 *Number of Specimens*—Specimen blanks shall be taken from bulk materials according to applicable specifications. The number of specimens to be tested should be sufficient to meet the requirements as determined by the test purpose, or as agreed upon between the parties involved. The larger the sample, the greater the confidence that the sample represents the total population. In most cases, between five and ten specimens should be sufficient to determine the compressive properties of a sample with reasonable confidence.

8.10 *Precautions:*

8.10.1 *Buckling*—In compression tests of relatively long, slender specimens that are not laterally supported, the specimens may buckle elastically and fly from the test setup. A protective device should be in place to prevent injury.

8.10.2 *Shattering Fracture*—Some materials may fail in a shattering manner which will cause pieces to be expelled as shrapnel. A protective device should be in place to prevent injury.

9. Calculations

9.1 Determine the properties of the material from the dimensions of the specimen and the stress-strain diagram as described in the following paragraphs. For testing machines that record load units instead of stress, convert the load-versus-strain diagram to units of stress by dividing the load by the original cross-sectional area of the specimen gage section.

9.2 *Modulus of Elasticity*—Calculate the modulus of elasticity as specified in Test Method E111. If the elastic modulus is the prime quantity to be determined, the procedure given in Test Method E111 must be followed. Again, the calculation of the modulus shall be according to Section 7 of Test Method E111.

9.3 *Yield Strength*—To determine the yield strength by the offset method it is necessary to secure data (autographic or numerical) from which a stress-strain diagram may be drawn. Then on the stress-strain diagram (Fig. 6) lay off *Om* equal to the specified value of offset (conventional offset is 0.002 in./in. (m/m)), draw *mn* parallel to *OA*, and thus locate *r*, the intersection of *mn* with the stress-strain diagram. The stress corresponding to the point *r* is the yield strength for the specified offset.

9.3.1 In reporting values of yield strength obtained by these methods, the specified value of offset used should be stated in parentheses after the term yield strength. Thus:

$$\text{Yield strength (offset} = 0.2\,\%) = 52.0\ \text{ksi}\ (359\ MPa) \qquad (4)$$

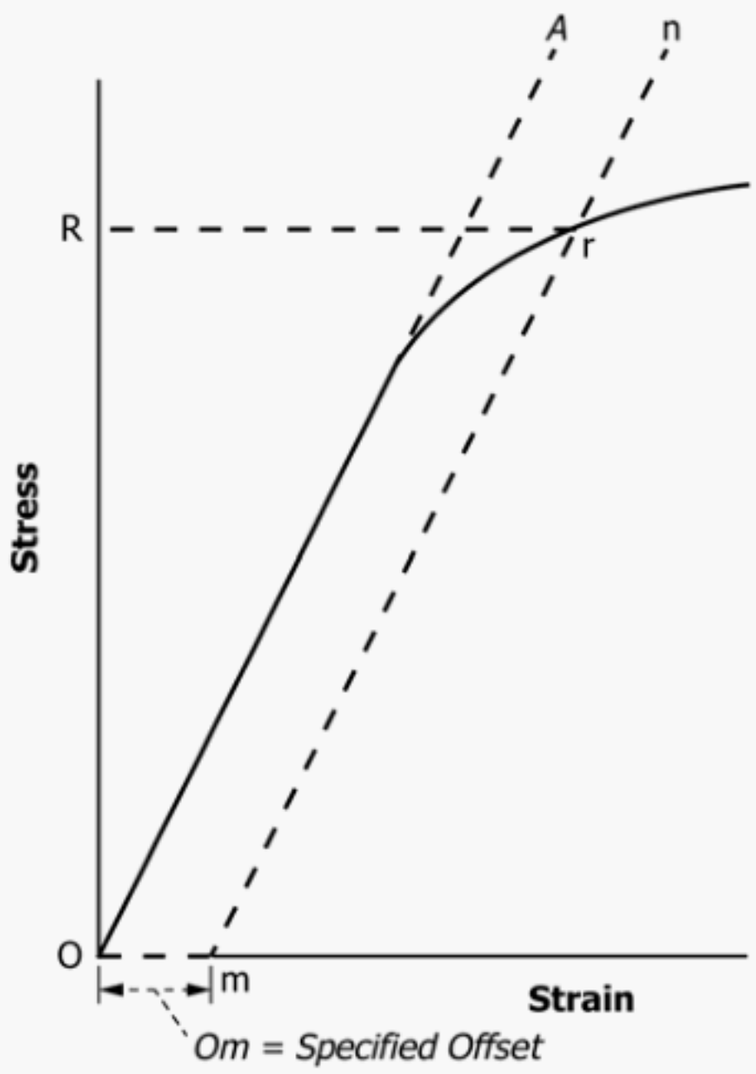

FIG. 6 Stress-Strain Diagram for Determination of Yield Strength by the Offset Method

9.3.2 In using these methods, a Class B-2 extensometer, as described in Practice E83, is sufficiently sensitive for most materials.

NOTE 5—Automatic devices are available that determine offset yield strength without plotting a stress-strain curve. Such devices may be used if their accuracy has been demonstrated to be satisfactory.

NOTE 6—If the load drops before the specified offset is reached, technically the material does not have a yield strength (for that offset). In this case, the stress at the maximum load before the specified offset is reached may be reported instead of the yield strength and shall be designated as the yield point.

9.4 *Yield Point*—Materials that exhibit a sharp-kneed stress-strain diagram may exhibit a distinct drop in stress with increasing strain. The yield point is the maximum stress attained just prior to the sudden drop in stress. For testing machines without strain- or deflection-recording capabilities, the yield point can be determined by noting the load at which the load dial indicator needle suddenly drops with the testing machine running at a steady rate.

9.5 *Compressive Strength*—For a material that fails in compression by crushing or fracturing, the compressive strength is the maximum stress at or before fracture, as determined by dividing the maximum load by the cross-sectional area. For ductile materials, compressive strength may be determined from the stress-strain diagram at a specified total strain. The strain at which this stress was determined must be specified.

10. Report

10.1 Include the following information in the test report:

10.1.1 *Specimen Material*—Describe the specimen material, alloy, heat treatment, mill batch number, grain direction, etc., as applicable.

10.1.2 *Specimen Configuration*—Include a sketch of the specimen configuration or reference to the specimen drawing.

10.1.3 *Specimen Dimensions*—State the actual measured dimensions for each specimen.

10.1.4 *Test Fixture and Lubricant*—Describe the test fixture or refer to fixture drawings. Specifying lubricant used, if any.

10.1.5 *Testing Machine*—Include the make, model, and load range of testing machine.

10.1.6 *Speed of Testing*—Record the test rate and mode of control.

10.1.7 *Stress-Strain Diagram*—Include, if possible, the stress-strain diagram with scales, specimen number, test data, rate, and other pertinent information.

10.1.8 *Modulus of Elasticity*—Report the modulus of elasticity when required, as determined according to 9.2.

10.1.9 *Yield Strength*—Report the yield stress or yield point when required and the method of determination, as calculated in 9.3 and 9.4.

10.1.10 *Compressive Strength*—Report the compressive strength for material exhibiting brittle failure. A compressive strength at a specified total strain may be reported for ductile materials. If so, report the strain at which the compressive stress was determined.

10.1.11 *Type of Failure*—When applicable, describe the type of specimen failure.

10.1.12 *Precision and Bias*—State the precision and accuracy of the data reported as applicable in a manner consistent with Practice E177.

10.1.13 *Anomalies*—State any anomalies that occurred during the test that may have had an effect on the test results.

10.2 For commercial acceptance testing the following sections of 10.1 are considered sufficient: 10.1.1 and 10.1.2, and 10.1.9 and 10.1.11.

11. Precision and Bias

11.1 *Interlaboratory Test Program*—Ten laboratories participated in an interlaboratory study (ILS) in 2009. Each laboratory conducted compression strength tests using AA2024–T351 cylindrical specimens with nominal diameter d = 12.6mm and nominal length l = 47.6 mm. This specimen is similar to, but longer than the suggested medium cylindrical specimen in Table 2. Each laboratory used an extensometer to measure the specimen strain. The nominal strain rate was $\dot{\varepsilon} = 0.005\ min^{-1}$. The design and analysis of the ILS followed Practice E691 and are documented in ASTM Research Report No. E28-1042.[4]

11.2 *Test Result*—Each laboratory reported the 0.2% offset yield strength, *YS*(0.2% offset) determined for the stress-strain curve for n=7 tests. The precision information in 11.3 is based on those results.

11.3 *Precision*—Table 3 summarizes the precision of the test method based on the ILS. Results are given for the 95 % repeatability limit (within a laboratory), r, and the 95 % reproducibility limit (between laboratories), R. in addition the values of r and R are expressed as their respective coefficients

[4] Supporting data have been filed at ASTM International Headquarters and may be obtained by requesting Research Report: RR:E28-1042. Contact ASTM Customer Service at service@astm.org.

TABLE 3 Precision

Material	*YS*(0.02% offset)	Repeatability standard deviation	Reproducibility standard deviation	95 % Repeatability limit (within a laboratory)	95 % Reproducibility limit (between laboratories)
	$\bar{x}$ MPa	s_r MPa	s_R MPa	r MPa	R MPa
AA2024–T351	346.2	3.8	6.8	10.7	19.1
		Repeatability coefficient of variation	Reproducibility coefficient of variation	r %	R %
		$CV_r = \frac{s_r}{\bar{x}}$	$CV_R = \frac{s_R}{\bar{x}}$		
AA2024–T351		1.1 %	2.0 %	3.1 %	5.5 %

The table was calculated using the relationship limit = 2.8 × standard deviation. The quantity $1.96\sqrt{2}$ rounds to 2.77 or 2.8.

of variation. These terms (95 % repeatability limit, r, and 95 % reproducibility limit, R) are used in as specified in Practice E177. Their respective standard deviations, s_r and s_R, which are also shown in Table 3 can be obtained by dividing by 2.8.

11.4 *Bias*—Since there is no accepted reference material, method, or laboratory suitable for determining the bias for the procedure in this test method for measuring compressive strength of metallic materials at room temperature, no statement of bias is being made.

12. Keywords

12.1 axial compression; barreling; bearing blocks; buckling; compressometer; sheet compression jig; stress-strain diagram; sub-press; testing machine

ANNEX

(Mandatory Information)

A1. SPECIAL REQUIREMENTS IN THE DETERMINATION OF THE COMPRESSIVE STRENGTH OF CEMENTED CARBIDES

A1.1 Characteristics of Cemented Carbides

A1.1.1 Cemented carbides are manufactured in a range of compositions having hardness from 81.0 to 93.0 HRA and compressive strengths 300 ksi to over 800 ksi (2100 to 5500 MPa). They fail by shattering fracture (see 8.7.2 and section 8.10.2).

A1.2 Apparatus and Fixtures

A1.2.1 *Bearing Blocks*—Cemented carbide bearing blocks shall be used. They shall be of a hardness such that the block faces will not suffer significant permanent deformation during test (suggested hardness of 92 HRA).

A1.2.2 *Bearing Block Preparation*—The block diameter shall be at least three times the diameter of the specimen. Its thickness shall be at least two thirds the block diameter. Faces of the bearing blocks shall be flat within ±0.0002 in./in. (m/m), parallel within 0.0005 in./in. (m/m), and have a surface finish of
8 µin. (0.2 µm) arithmetic average (aa). The blocks shall be used in conjunction with devices such as those shown in Figs. 3-5.

A1.2.3 The total accumulated lack of parallelism in the test assembly shall not exceed 0.0005 in./in. (m/m).

A1.2.4 In order to minimize detrimental end effects, a shim of 0.001 in. (0.025 mm) in thickness, of standard cold-rolled steel shim stock, shall be interposed between each specimen end and the bearing block. Each shim shall be used only once (see Ref **14**).

A1.3 Test Specimens

A1.3.1 *Size and Shape*—The specimens shall be in the form of circular cylinders 0.375 ± 0.01 in. (10.0 ± 0.2 mm) in diameter and 1.00 ± 0.05 in. (25.0 ± 1.0 mm) long.

A1.3.2 *Preparation of Specimens*—The ends of a specimen shall be plane and normal to its longitudinal axis. They shall be parallel within a maximum of ±0.0005 in./in. (m/m), flat within ±0.0002 in./in. (m/m), and have a surface finish of 8 µin. (0.2 µm) aa.

A1.4 Speed of Testing

A1.4.1 Speed of testing shall be specified in terms of rate of stressing the specimen, and shall not exceed 50.0 ksi/min (345 MPa)/min.

REFERENCES

(1) Papirno, R., "Inelastic Buckling of ASTM Standard E9 Compression Specimens," *Journal of Testing and Evaluation*, JTEVA, Vol 15, No. 3, May 1987, pp. 133–135.

(2) Mescall, J., Papirno, R., and McLaughlin, J., "Stress and Deformation States Associated with Upset Tests in Metals," *Compression Testing of Homogeneous Materials and Composites*, ASTM STP 808, Richard Chait and Ralph Papirno, Eds., ASTM, 1983, pp. 7–23.

(3) Chait, R., and Curll, C. H., "Evaluating Engineering Alloys in Compression," *Recent Developments in Mechanical Testing.* ASTM*STP 608*, ASTM International, 1976, pp. 3–19; see also Hsü, T. C., A Study of the Compression Test for Ductile Materials, *Materials Research and Standards*, Vol 9, No. 12, December 1969, p. 20.

(4) Paul, D. A., Howell, F. M., and Grieshaber, H. E.," Comparison of Stress-Strain Curves Obtained by Single-Thickness and Pack Methods," National Advisory Committee for Aeronautics, Washington, DC, Technical Note No. NACA-TN-819, August 1941.

(5) Templin, R. L., "Discussion on Single-Strip Compression Test for Sheet Materials," *Proceedings, ASTM*, Vol 45, 1945, pp. 690–93.

(6) Kotanchik, J., Woods, W., and Weinberger, R., "Investigation of Methods of Supporting Single-Thickness Specimens in a Fixture for Determination of Compressive Stress-Strain Curves," National Advisory Committee for Aeronautics, Washington, DC, Wartime Report No. WR L-189, May 1945.

(7) Moore, A. A., and McDonald, J. C., "Compression Testing of Magnesium Alloy Sheet," *Proceedings, ASTM*, Vol 45, 1945 , pp. 671–704.

(8) LaTour, H., and Wolford, D. S., "Single-Strip Compression Test for Sheet Materials," *Proceedings, ASTM*, Vol 45, 1945, pp. 671–88.

(9) Miller, J. A., "A Fixture for Compressive Tests of Thin Sheet Steel Between Lubricated Steel Guides," National Advisory Committee for Aeronautics, Washington, DC, Technical Note No. NACA-TN-1022, April 1946.

(10) Ramberg, W., and Miller, J. A., "Determination and Presentation of Compressive Stress-Strain Data for Thin Sheet Metal," *Journal of the Aeronautical Sciences*, Vol 13, No. 11, 1946, pp. 569–80.

(11) Miller, J. A., "Discussion on Micro-Deformation under Tension and Compression Loads of Thin Aluminum Alloy Sheets for Aircraft Construction," *Proceedings, ASTM*, Vol 44, 1944, pp. 683–85 (See Ref. 7 for fuller description of the fixture.)

(12) Sandorff, P. E., and Dillon, R. K., "Compressive Stress-Strain Properties of Some Aircraft Materials," *Proceedings, ASTM*, Vol 46, 1946, pp. 1039–52.

(13) *Symposium on Elevated Temperatures Compression Testing of Sheet Materials, ASTM STP 303*, ASTM International, 1962.

(14) Lueth, R. C., and Hale, T. E., "Compressive Strength of Cemented Carbides—Failure Mechanics and Testing Methods," *Materials Research and Standards*, Vol 10, No. 2, 1970, pp. 23–28.

ASTM International takes no position respecting the validity of any patent rights asserted in connection with any item mentioned in this standard. Users of this standard are expressly advised that determination of the validity of any such patent rights, and the risk of infringement of such rights, are entirely their own responsibility.

This standard is subject to revision at any time by the responsible technical committee and must be reviewed every five years and if not revised, either reapproved or withdrawn. Your comments are invited either for revision of this standard or for additional standards and should be addressed to ASTM International Headquarters. Your comments will receive careful consideration at a meeting of the responsible technical committee, which you may attend. If you feel that your comments have not received a fair hearing you should make your views known to the ASTM Committee on Standards, at the address shown below.

This standard is copyrighted by ASTM International, 100 Barr Harbor Drive, PO Box C700, West Conshohocken, PA 19428-2959, United States. Individual reprints (single or multiple copies) of this standard may be obtained by contacting ASTM at the above address or at 610-832-9585 (phone), 610-832-9555 (fax), or service@astm.org (e-mail); or through the ASTM website (www.astm.org). Permission rights to photocopy the standard may also be secured from the Copyright Clearance Center, 222 Rosewood Drive, Danvers, MA 01923, Tel: (978) 646-2600; http://www.copyright.com/