This international standard was developed in accordance with internationally recognized principles on standardization established in the Decision on Principles for the Development of International Standards, Guides and Recommendations issued by the World Trade Organization Technical Barriers to Trade (TBT) Committee.

Designation: F446 – 19

Standard Consumer Safety Specification for Grab Bars and Accessories Installed in the Bathing Area[1]

This standard is issued under the fixed designation F446; the number immediately following the designation indicates the year of original adoption or, in the case of revision, the year of last revision. A number in parentheses indicates the year of last reapproval. A superscript epsilon (ε) indicates an editorial change since the last revision or reapproval.

This standard has been approved for use by agencies of the U.S. Department of Defense.

INTRODUCTION

This consumer safety specification addresses certain bathing area accidents that were identified by the U. S. Consumer Product Safety Commission (CPSC), specifically those which might have been prevented by the presence of adequate grab bars. This specification also addresses the safe performance required of accessory items installed in the bathing area.

Available data from the National Electronic Injury Surveillance System (NEISS) were studied by Abt Associates, Inc., with assistance from Researchitects Inc., and reported to the CPSC. This information was made available to ASTM Task Group F15.03. It was reviewed along with other information appropriate to the subject and became the basis for developing this specification.

The information reviewed indicated that slips and falls frequently occur while entering or leaving the tub, while changing between a sitting or standing position, or while moving around in the bathing area. This specification establishes parameters as to strength, location, and general requirements of grab bars and accessories to assist movement and reduce hazards in the bathing area.

1. Scope

1.1 This consumer safety specification covers performance requirements, test methods, and levels of performance to ensure satisfactory functioning of the grab bars and accessory items (not including plumbing controls) during reasonable use to assist a person entering, leaving, or moving within the bathing area.

1.2 This consumer safety specification is intended to reduce the number of accidents by specifying requirements for grab bars and accessories designed to decrease the probability of slips and falls.

1.3 This consumer safety specification does not address the specific need of gang showers, island tubs, peninsula tubs, sunken tubs, or tubs 6 ft (1.8 m) or longer.

1.4 This consumer safety specification exempts shower stalls with both interior dimensions of 34 in. (864 mm) or less.

1.5 The values stated in inch-pound units are to be regarded as standard. The values given in parentheses are mathematical conversions to SI units that are provided for information only and are not considered standard.

1.6 The following precautionary caveat pertains only to the test method portion, Section 7, of this specification. *This standard does not purport to address all of the safety problems, if any, associated with its use. It is the responsibility of the user of this standard to establish appropriate safety, health, and environmental practices and determine the applicability of regulatory limitations prior to use.*

1.7 *This international standard was developed in accordance with internationally recognized principles on standardization established in the Decision on Principles for the Development of International Standards, Guides and Recommendations issued by the World Trade Organization Technical Barriers to Trade (TBT) Committee.*

2. Definitions

2.1 *back wall*—wall opposite the exit-entry side of a tub or shower (see Figs. 1-4).

2.2 *bathing area*—bathing space that consists of a tub, tub-shower, or shower stall bounded by four walls, real or imaginary, extending vertically to the ceiling from the outside edge of the tub or stall (see Figs. 1-4).

2.3 *bathing area accessories*—towel bars, towel rings, soap holders, towel utility shelves, and other similar devices that are intended to be permanently affixed to surfaces and used in the bathing area.

[1] This specification is under the jurisdiction of ASTM Committee F15 on Consumer Products and is the direct responsibility of Subcommittee F15.03 on Safety Standards for Bathtub and Shower Structures.

Current edition approved Jan. 1, 2019. Published February 2019. Originally approved in 1978. Last previous edition approved in 2009 as F446 – 85 (2009), which was withdrawn in July 2018 and reinstated in January 2019. DOI: 10.1520/F0446-19.

Copyright © ASTM International, 100 Barr Harbor Drive, PO Box C700, West Conshohocken, PA 19428-2959. United States

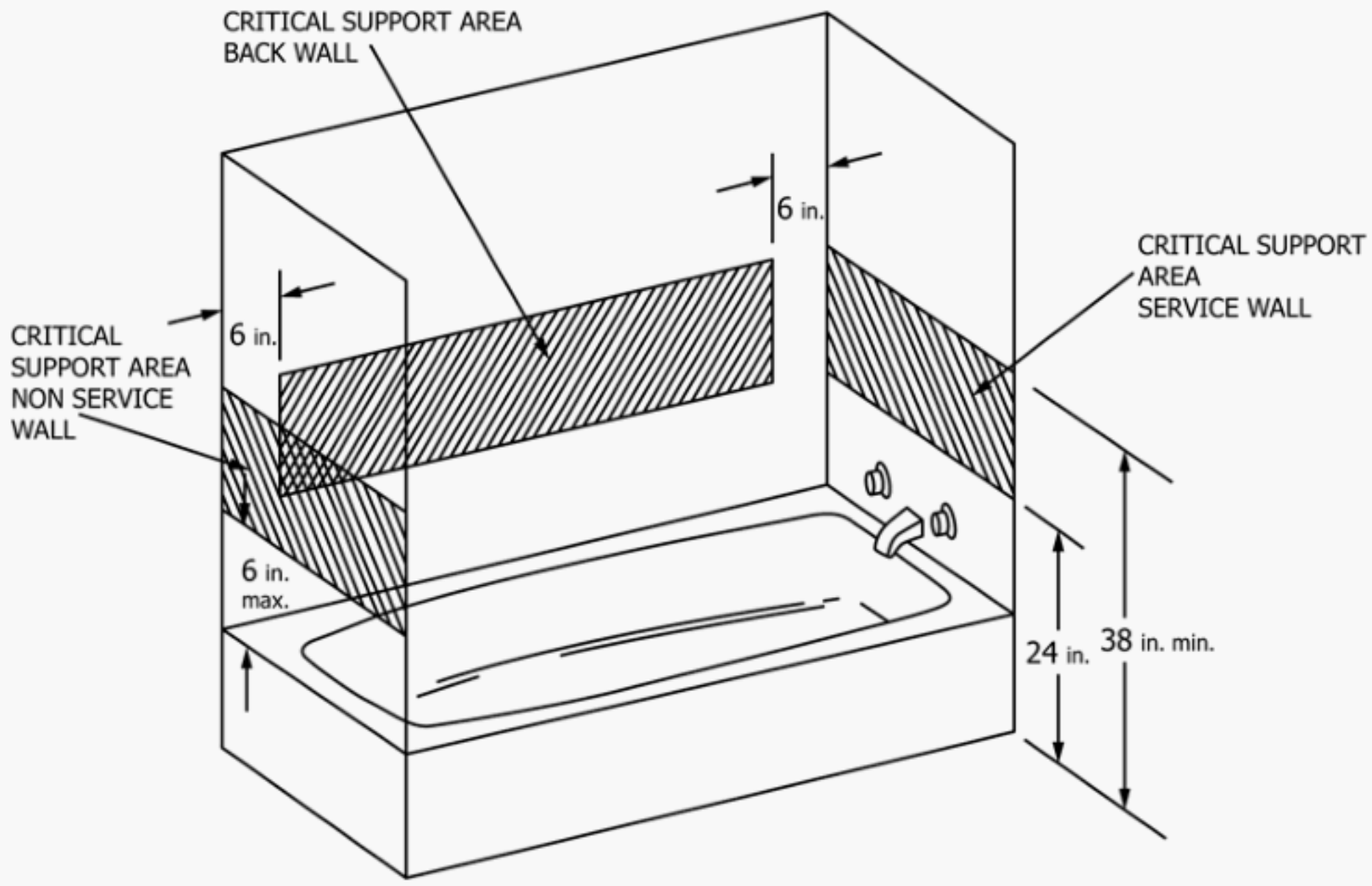

FIG. 1 Recessed Tub Bathing Area

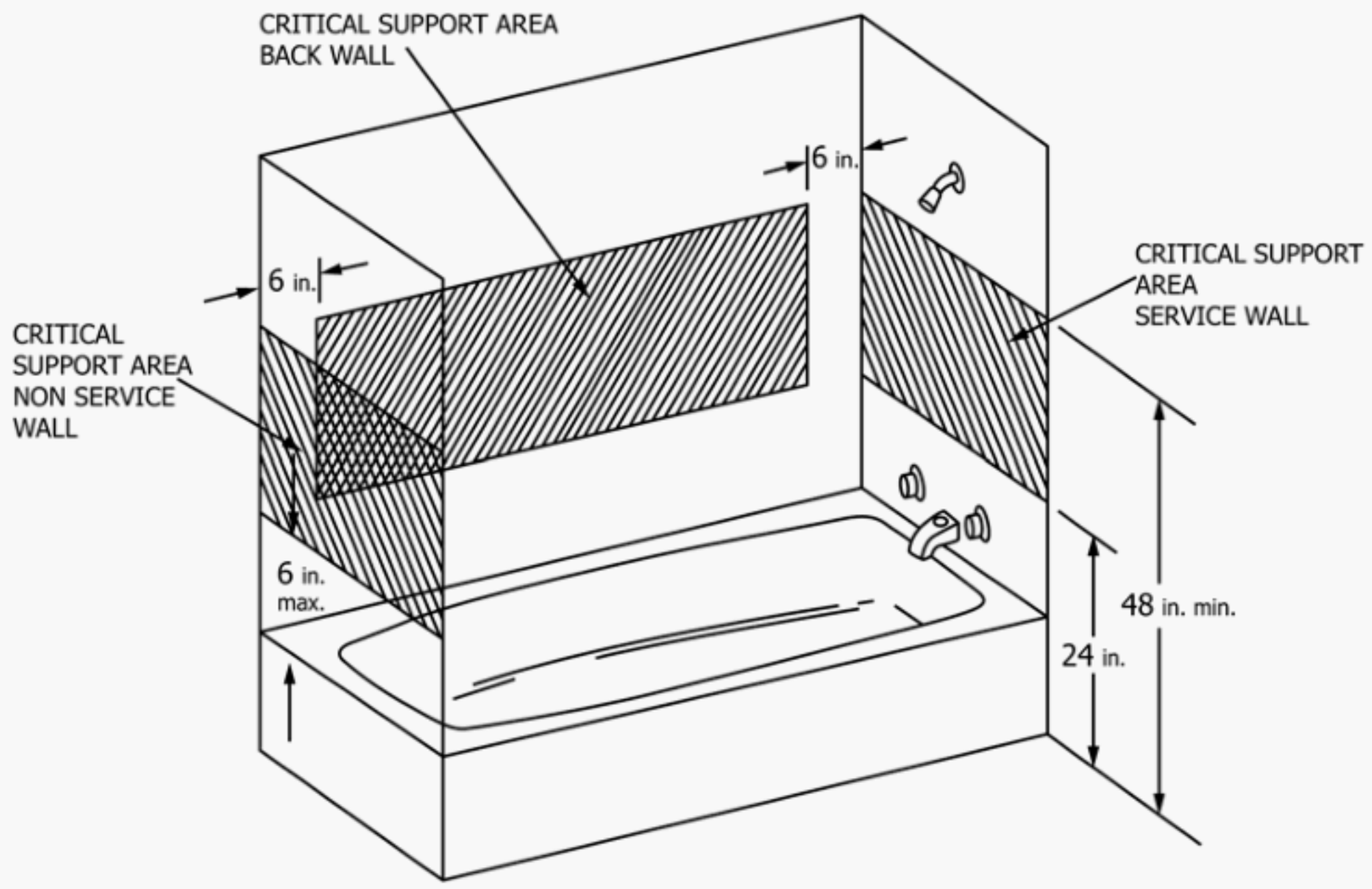

FIG. 2 Recessed Tub-Shower Bathing Area

2.4 *critical support area*—that portion of the back, service, or nonservice wall in which support would most likely be beneficial in four different bathing areas (see Figs. 1-4 for specific requirements in this area).

2.5 *grab-bar*—bar or similar device made for the purpose of assisting a person in movement within the bathing area and for assistance in entering or exiting the bathing area. Sometimes referred to in the industry as hand holds.

2.6 *nonservice wall*—any wall excluding the back wall within the bathing area that does not contain plumbing service.

2.7 *plumbing controls*—valves, spouts, and shower head or fittings, or both, that allow the user to control the water flow and temperature.

2.8 *potential hazard area*—any surface within the bathing area, including bathtub or shower receptor from tub or shower floor up to 66 in. (1.7 m), which could be contacted by the body in a slip or fall situation.

2.9 *recessed tub*—bathtub enclosed by and attached to two or three walls without shower facilities.

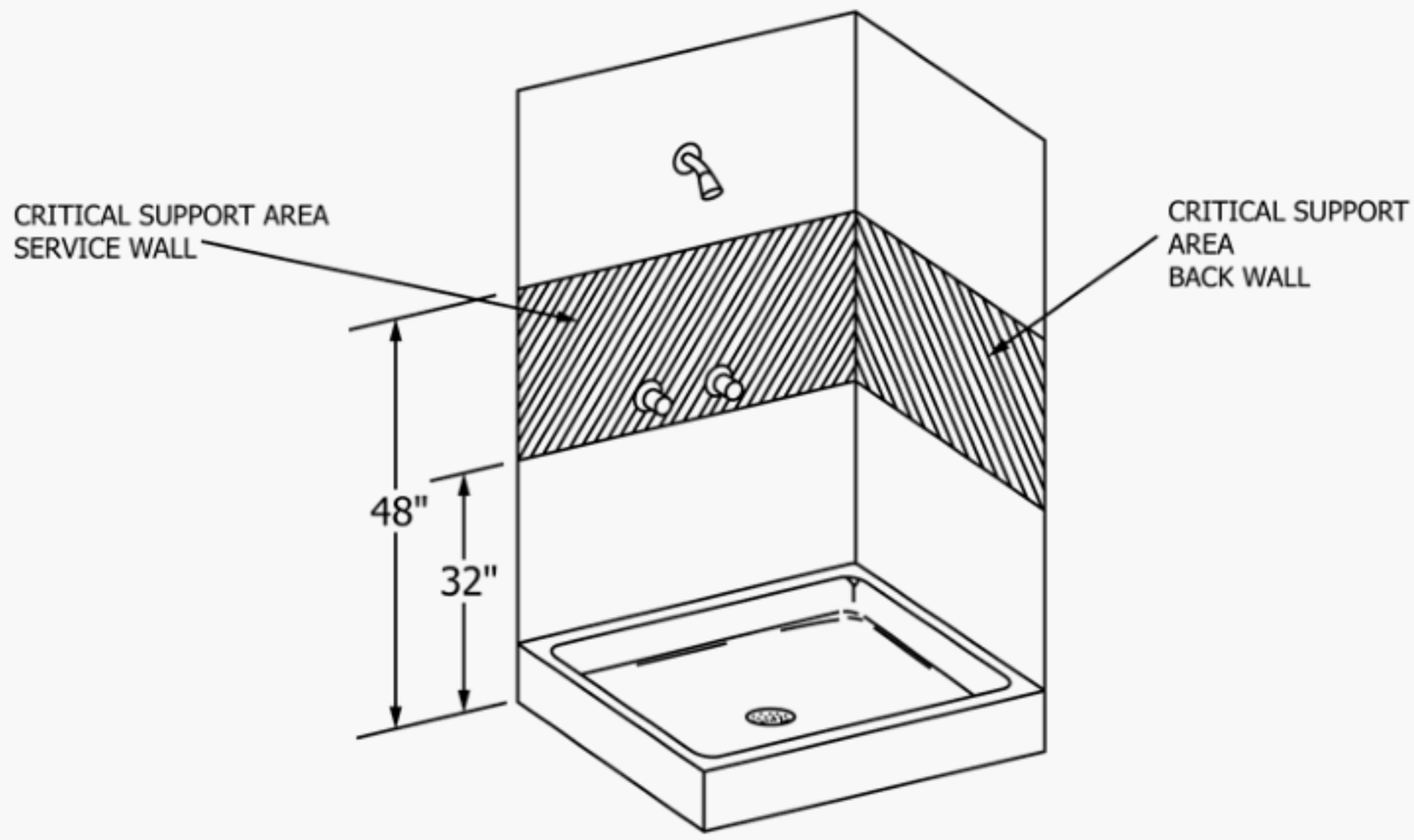

FIG. 3 Two-Wall Stall Shower Bathing Area

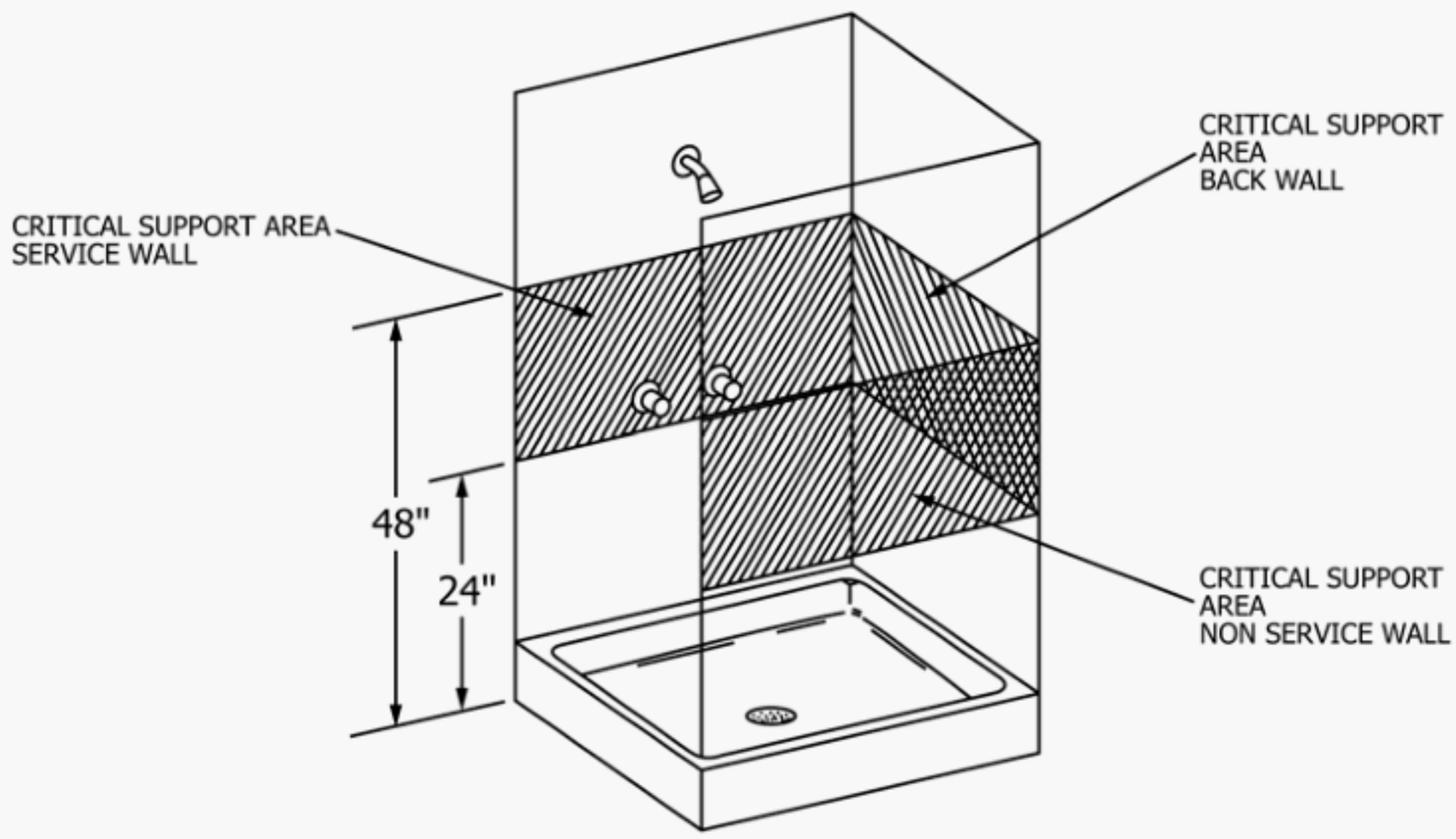

FIG. 4 Three-Wall Stall Shower Bathing Area

2.10 *service back wall*—wall opposite the exit-entry side of the tub or shower that serves as a back wall as well as the location of controls.

2.11 *service wall*—wall within the bathing area upon which the plumbing controls are located.

2.12 *shower receptor*—basin-like device in a shower that catches the water and directs it into the drain.

2.13 *shower stall*—two- or three-wall enclosure with a shower receptor and plumbing controls for shower bathing.

2.14 *tub-shower*—recessed tub with a shower head.

2.15 *tub or shower entrance area*—place where an individual enters and exits from a tub or shower, or both.

3. Compliance

3.1 No grab bar or accessory shall either by label or other means indicate compliance with this specification unless it conforms to all requirements contained herein.

4. General Requirements

4.1 Grab bars, accessories, their fastening devices, and trim shall be free of exposed burrs, sharp edges, and pinch points when mounted in their functional positions.

4.2 Grab bars are to be installed in the critical support area in accordance with 5.1.1 – 5.2.

4.3 Accessories mounted in the potential hazard area shall meet the requirements of 4.5 if they project more than 1 in. (25

mm). Projecting soap dishes without rails or bars are exempt when installed outside of the critical support area.

4.4 All grab bars or accessories shall have flanges or other devices to allow mounting to a wall with suitable fasteners or products.

4.5 All grab bars or accessories in the potential hazard area that project more than 1 in. (25 mm) when properly installed shall support a static load of at least 250 lbf (1.1 kN) when tested in accordance with Section 7.

4.6 Grab bars or projecting accessory bars shall not rotate more than 1/16 of a turn within their holding devices.

4.7 All parts or products shall be capable of resisting deterioration in the environment to which they are exposed to the degree that the intended performance of the device or system will not be adversely affected within the average normal life expectancy of the device or system.

5. Installation Requirements

5.1 *Recessed Tub With or Without Showering Facilities:*

5.1.1 A horizontal grab bar or bars shall be installed on the back-wall critical support area with a total minimum length equal to 30 % of the horizontal length of the critical support area.

5.1.2 A horizontal or vertical grab bar or bars shall be installed in the critical support area on either the service wall or nonservice wall. The horizontal bar or bars shall provide a minimum grippable length of 9 in. (230 mm) (see Fig. 5) within the critical support area. The vertical bar shall provide a minimum grippable length of 6 in. (152 mm) (see Fig. 5) and shall be installed in the tub entrance area.

5.2 *Shower Stall*—A horizontal grab bar or bars shall be installed in the critical support area on either the service wall, back wall, or nonservice wall. The bar shall provide a minimum grippable length of 9 in. (230 mm) of the critical support area.

6. Instructions and Warnings

6.1 Grab bars and accessories that are to be installed in the potential hazard area, as defined in 2.8, shall be accompanied by installation instructions that, if followed, will assure that the grab bar or accessory as installed meets all of the requirements of Sections 4 and 5 of this specification.

6.2 Warnings against careless or improper installation shall also be given.

6.3 Instructions shall make recommendations as to the location of grab bars.

7. Test Methods

7.1 The significance of this procedure is to determine whether grab bars and projecting accessories conform with 4.5.

7.2 *Grab Bars*—Attach the bar to a section of a wall, reflecting typical building construction found in bathing areas, with suitable fasteners or products in accordance with the manufacturer's instructions.

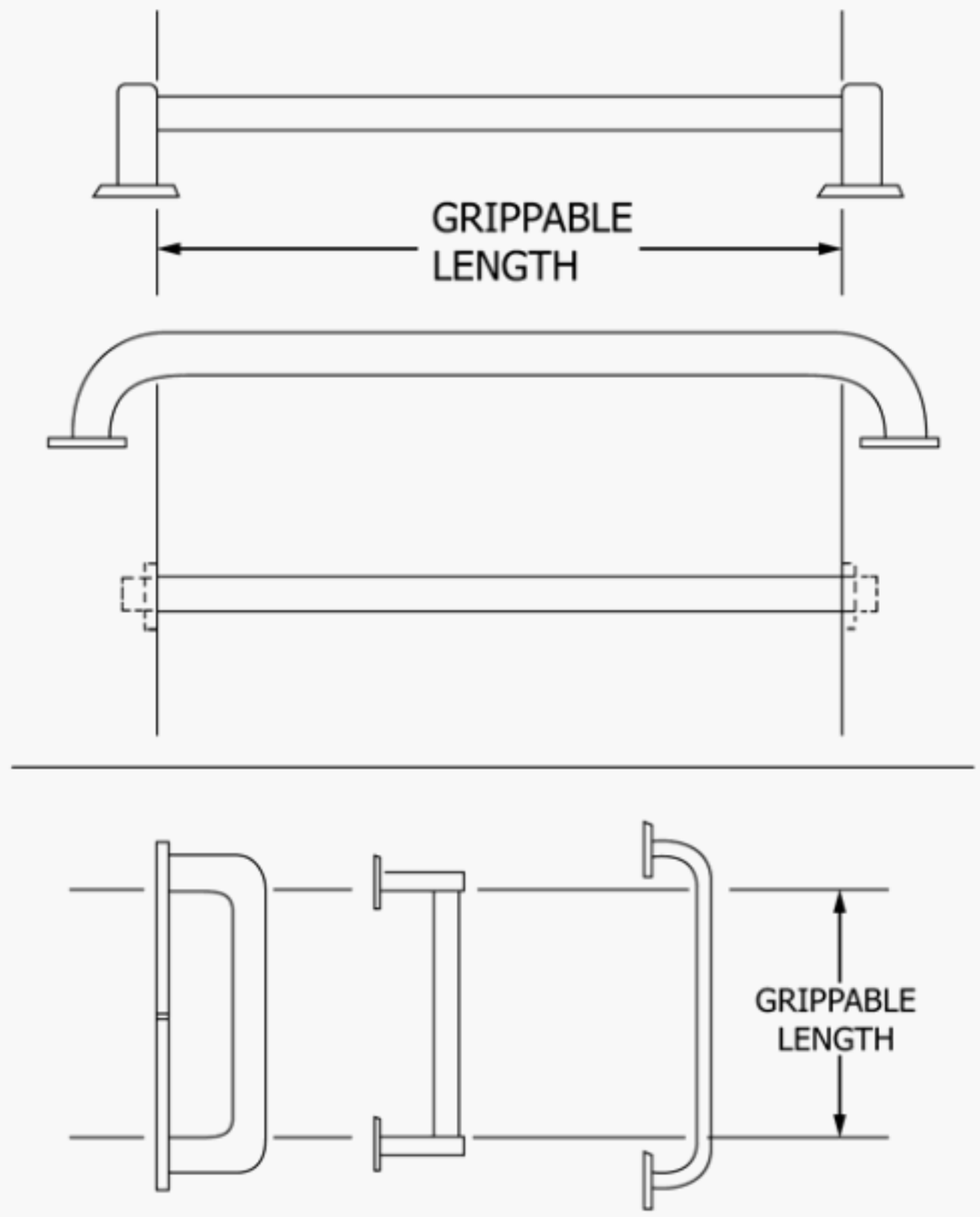

FIG. 5 Typical Applications of Grab Bars

7.2.1 *Bar Mounted Horizontally*—Gradually apply a downward load of at least 250 lbf (1.1 kN) continuously or in 5 to 50-lbf (22 to 222-N) increments over a maximum 3½-in. (89-mm) section in the center of the bar or a section centered between supports.

7.2.2 *Bar Mounted Vertically*—Gradually apply a downward load of at least 250 lbf (1.1 kN) continuously or in 5 to 50-lbf (22 to 222-N) increments over a maximum 3½-in. (89-mm) section of the lower half of a vertically mounted grab bar, pulling at a 30 ± 5-deg angle from the wall that the bar is mounted on.

7.2.3 Weight should be applied within a 30-min period and once 250 lbf (1.1 kN) is reached, it should remain so for at least 5 min.

7.2.4 The bar or wall shall not break or fail under the load. Break or failure means that during the testing procedure the bar or accessory was affected in such a way that it ceased to provide the safety characteristics required to maintain balance, to prevent falling, or to aid in exit or entry.

7.3 *Bathing Area Accessories*—Test bathing area accessories that project more than 1 in. (25 mm) by a suitable method that shall be devised by the manufacturer to support a load, as stated in 7.2.1, over a maximum 3½-in. (89-mm) span.

8. Keywords

8.1 accessories; applications; bathing; grab bars; installation

ASTM International takes no position respecting the validity of any patent rights asserted in connection with any item mentioned in this standard. Users of this standard are expressly advised that determination of the validity of any such patent rights, and the risk of infringement of such rights, are entirely their own responsibility.

This standard is subject to revision at any time by the responsible technical committee and must be reviewed every five years and if not revised, either reapproved or withdrawn. Your comments are invited either for revision of this standard or for additional standards and should be addressed to ASTM International Headquarters. Your comments will receive careful consideration at a meeting of the responsible technical committee, which you may attend. If you feel that your comments have not received a fair hearing you should make your views known to the ASTM Committee on Standards, at the address shown below.

This standard is copyrighted by ASTM International, 100 Barr Harbor Drive, PO Box C700, West Conshohocken, PA 19428-2959, United States. Individual reprints (single or multiple copies) of this standard may be obtained by contacting ASTM at the above address or at 610-832-9585 (phone), 610-832-9555 (fax), or service@astm.org (e-mail); or through the ASTM website (www.astm.org). Permission rights to photocopy the standard may also be secured from the Copyright Clearance Center, 222 Rosewood Drive, Danvers, MA 01923, Tel: (978) 646-2600; http://www.copyright.com/