This international standard was developed in accordance with internationally recognized principles on standardization established in the Decision on Principles for the Development of International Standards, Guides and Recommendations issued by the World Trade Organization Technical Barriers to Trade (TBT) Committee.

Designation: F72 – 17

Standard Specification for Gold Wire for Semiconductor Lead Bonding[1]

This standard is issued under the fixed designation F72; the number immediately following the designation indicates the year of original adoption or, in the case of revision, the year of last revision. A number in parentheses indicates the year of last reapproval. A superscript epsilon (ε) indicates an editorial change since the last revision or reapproval.

1. Scope

1.1 This specification covers round drawn/extruded gold wire for internal semiconductor device electrical connections. Four classifications of wire are distinguished, (*1*) copper-modified wire, (*2*) beryllium-modified wire, (*3*) high-strength wire, and (*4*) special purpose wire.

NOTE 1—Trace metallic elements have a significant effect upon the mechanical properties and thermal stability of high-purity gold wire. It is customary in manufacturing to add controlled amounts of selected impurities to gold to modify or stabilize bonding wire properties, or both. This practice is known variously as "modifying," "stabilizing," or "doping." The first two wire classifications denoted in this specification refer to wire made with either of two particular modifiers, copper or beryllium, in general use. In the third and fourth wire classifications, "high-strength" and "special purpose" wire, the identity of modifying additives is not restricted.

1.2 The values stated in SI units shall be regarded as the standard.

1.2.1 A mixed system of metric and inch-pound units is in widespread use for specifying semiconductor lead-bonding wire. SI-equivalent values of other commonly used units are denoted by parentheses in text and tables.

1.3 The following hazard caveat pertains only to the test method portion, Section 9, of this specification. *This standard does not purport to address all of the safety, health, and environmental concerns, if any, associated with its use. It is the responsibility of the user of this standard to establish appropriate safety and health practices and determine the applicability of regulatory limitations prior to use.*

1.4 *This international standard was developed in accordance with internationally recognized principles on standardization established in the Decision on Principles for the Development of International Standards, Guides and Recommendations issued by the World Trade Organization Technical Barriers to Trade (TBT) Committee.*

2. Referenced Documents

2.1 *ASTM Standards:*[2]

E16 Method of Free Bend Test for Ductility of Welds (Withdrawn 1978)[3]

F205 Test Method for Measuring Diameter of Fine Wire by Weighing

F219 Test Methods of Testing Fine Round and Flat Wire for Electron Devices and Lamps

F584 Practice for Visual Inspection of Semiconductor Lead-Bonding Wire (Withdrawn 2015)[3]

3. Ordering Information

3.1 Orders for material under this specification shall include the following information:

3.1.1 Classification: copper-modified, beryllium-modified, high strength, or special purpose,

3.1.2 Quantity,

3.1.3 Purity (Section 4),

3.1.4 Type, hard, stress relieved, or annealed (Section 5),

3.1.5 Breaking load and percentage elongation range (Section 5),

3.1.6 Wire diameter (Section 6),

3.1.7 Spool type, length of wire per spool, and type of wind (Section 11),

3.1.8 Despooling, left-handed unwind or right-handed unwind (Section 11), and,

3.1.9 Packaging and marking (Section 12).

4. Chemical Composition

4.1 Beryllium-modified material shall conform to the chemical requirements specified in Table 1.

4.2 High-strength material shall conform to the chemical requirements specified in Table 2.

4.3 Special purpose material shall be in accordance with Table 3.

[1] This specification is under the jurisdiction of ASTM Committee F01 on Electronics and is the direct responsibility of Subcommittee F01.03 on Metallic Materials, Wire Bonding, and Flip Chip.

Current edition approved Dec. 1, 2017. Published January 2018. Originally approved in 1966. Last previous edition approved in 2006 as F72 – 06 which was withdrawn January 2015 and reinstated in December 2017. DOI: 10.1520/F0072-17.

[2] For referenced ASTM standards, visit the ASTM website, www.astm.org, or contact ASTM Customer Service at service@astm.org. For *Annual Book of ASTM Standards* volume information, refer to the standard's Document Summary page on the ASTM website.

[3] The last approved version of this historical standard is referenced on www.astm.org.

Copyright © ASTM International, 100 Barr Harbor Drive, PO Box C700, West Conshohocken, PA 19428-2959. United States

TABLE 1 Chemical Requirements, Beryllium-Modified Gold Bonding Wire

Element	Composition, Weight, %
Gold, min	99.99
Beryllium	0.0003–0.0010
Other impurities, max each	0.003
Total of all detectable impurities, max	0.01

TABLE 2 Chemical Requirements, High-Strength Gold Bonding Wire

Element	Composition, Weight, %
Gold, min	99.99
Total of all detectable impurities, max	0.01

TABLE 3 Chemical Requirements, Special Purpose Gold Bonding Wire

Element	Composition, Weight, %
Gold	Not restricted
Other principal elements	Not restricted
Total of all detectable elements	Not restricted

NOTE 2—Copper-modified wire is used on thermocompression wire bonding machines. Beryllium-modified material is often preferred on high-speed automated thermocompression or thermosonic bonding equipment. High-strength wire was developed for use on some very high speed automated thermosonic bonders.

5. Mechanical Properties

5.1 Material specified by this standard may be either of two types:

5.1.1 *Hard*—Wire, as drawn/as extruded.

5.1.2 *Annealed*—Wire, annealed after drawing/extruding.

5.2 *Breaking Load and Elongation*—The tension test shall be the standard test for determining the mechanical properties, and acceptance or rejection shall depend on the breaking load and percent elongation at failure of a 254-mm (10.0-in.) length of wire.

5.2.1 Hard wire shall conform to the requirements of Table 4 for beryllium-modified gold wire.

TABLE 4 Breaking Load and Elongation of Hard Wire—Beryllium-Modified Gold and High-Strength Gold[A]

Nominal Diameter, µm (in.)	Breaking Load, min, N (gf)	Elongation in 254 mm (10.0 in.), %
13 (0.00050)	0.039 (4.0)	0.5 to 2.0, incl
18 (0.00070)	0.069 (7.0)	0.5 to 2.0, incl
20 (0.00080)	0.088 (9.0)	0.5 to 2.0, incl
23 (0.00090)	0.147 (15.0)	1.0 to 2.5, incl
25 (0.0010)	0.177 (18.0)	1.0 to 2.5, incl
28 (0.0011)	0.216 (22.0)	1.0 to 2.5, incl
30 (0.0012)	0.265 (27.0)	1.0 to 2.5, incl
31.8 (0.00125)	0.284 (29.0)	1.0 to 2.5, incl
33 (0.0013)	0.314 (32.0)	1.0 to 2.5, incl
38 (0.0015)	0.392 (40.0)	1.0 to 2.5, incl
51 (0.0020)	0.736 (75.0)	1.0 to 3.0, incl

[A] All modern wires are expected to have a somewhat longer shelf life, but each manufacturer's product will be slightly different.

TABLE 5 Breaking Load and Elongation of Stress Relieved/Annealed Wire—Beryllium-Modified Gold[A]

Nominal Diameter, µm (in.)	Breaking Load, min, N (gf)	Elongation in 254 mm (10.0 in.), %		
		Min	Max	Range[B]
13 (0.00050)	0.020 (2.0)	0.5	3.0	2
18 (0.00070)	0.029 (3.0)	0.5	7.0	3
20 (0.00080)	0.039 (4.0)	0.5	8.0	3
23 (0.00090)	0.059 (6.0)	0.5	8.0	3
25 (0.0010)	0.069 (7.0)	0.5	10.0	3
28 (0.0011)	0.078 (8.0)	0.5	10.0	3
30 (0.0012)	0.0981 (10.0)	0.5	10.0	3
31.8 (0.00125)	0.108 (11.0)	0.5	10.0	3
33 (0.0013)	0.118 (12.0)	0.5	10.0	3
38 (0.0015)	0.147 (15.0)	0.5	12.0	4
51 (0.0020)	0.245 (25.0)	0.5	15.0	4

[A] All modern wire are expected to have a somewhat longer shelf life, but each manufacturer's product will be slightly different.

[B] A range of permissible elongation of at least the number of percentage points shown shall be selected from within the overall range designated by the minimum and maximum values for the given diameter. For example, for wire of 25-µm (0.0010-in.) diameter, permissible elongation of 4.0 to 7.0, 6.0 to 9.0, 7.0 to 10.0 %, etc., may be selected.

TABLE 6 Breaking Load and Elongation of Stress Relieved/Annealed Wire—High-Strength Gold[A]

Nominal Diameter, µm (in.)	Breaking Load, min, N (gf)	Elongation in 254 mm (10.0 in.), %[B]	
		Min	Max
13 (0.00050)	0.020 (2.0)	0.5	3.0
18 (0.00070)	0.039 (4.0)	0.5	5.0
20 (0.00080)	0.040 (5.0)	0.5	6.0
23 (0.00090)	0.064 (6.5)	0.5	6.0
25 (0.0010)	0.078 (8.0)	0.5	6.0
28 (0.0011)	0.093 (9.5)	0.5	6.0
30 (0.0012)	0.113 (11.5)	0.5	6.0
31.8 (0.00125)	0.123 (12.5)	0.5	6.0
33 (0.0013)	0.132 (13.5)	0.5	6.0
38 (0.0015)	0.176 (18.0)	0.5	7.0
51 (0.0020)	0.314 (32.0)	0.5	7.0

[A] All modern wire are expected to have a somewhat longer shelf life, but each manufacturer's product will be slightly different.

[B] Except for 13 µm, 38 µm, and 51 µm, the minimum-maximum range is usually 3 percentage points, for example, 2 to 5, 3 to 6, and 4 to 7 %. For 13 µm it is usually 1.5 percentages points, for example, 0.5 to 2, 1 to 2.5, and 1.5 to 3 %. For 38 µm and 51 µm it is usually 4 percentage points, for example, 0.5 to 4.5, 1 to 5, 2 to 6, and 3 to 7 %.

5.2.2 Stress relieved/annealed wire shall conform to the requirements of Table 5 for beryllium-modified gold wire, to the requirements of Table 6 for high-strength wire, and to the requirements of Table 7 for special purpose wire.

NOTE 3—Hard wire is generally used for ultrasonic wire bonding. Annealed wire is used for thermocompression and thermosonic bonding.

6. Dimensions and Permissible Variations

6.1 Wire diameters shall be expressed in µm (or equivalent decimal fractions of an inch). Tolerances for the various size ranges are specified in Table 8.

7. Workmanship, Finish, and Appearance

7.1 The wire surface shall be clean and free of finger oils and stains.

7.2 The wire surface shall be free of drawing/extrusion lubricant residues, particulate matter and other contaminants

TABLE 7 Breaking Load and Elongation of Stress Relieved/ Annealed Wire-Special Purpose[A]

Nominal Diameter, µm (in.)	Breaking Load, min, N (gf)	Elongation in 254 mm (10.0 in.), %		
		Min	Max	Range[B]
13 (0.00050)	To be determined between wire user and wire manufacturer	0.5	3.0	1.5
18 (0.00070)		0.5	7.0	2.0
20 (0.00080)		0.5	8.0	2.0
23 (0.00090)		0.5	8.0	2.0
25 (0.0010)		0.5	10.0	2.0
28 (0.0011)		0.5	10.0	2.0
30 (0.0012)		0.5	10.0	2.0
31.8 (0.00125)		0.5	10.0	2.0
33 (0.0013)		0.5	10.0	2.0
38 (0.0015)		0.5	12.0	2.0
51 (0.0020)		0.5	15.0	2.0

[A] All modern wire are expected to have a somewhat longer shelf life, but each manufacturer's product will be slightly different.
[B] A range of permissible elongation of at least the number of percentage points shown shall be selected from within the overall range designated by the minimum and maximum values for the given diameter. For example, for wire of 25-µm (0.0010-in.) diameter, a permissible elongation of 4.0 to 6.0, 6.0 to 8.0, 7.0 to 9.0 %, etc., may be selected.

TABLE 8 Dimensional Tolerances

Nominal Diameter, µm (in.)	Standard Tolerance		Special Purpose Tolerance	
	% of Nominal Diameter	% of Nominal Weight	% of Nominal Diameter	% of Nominal Weight
13 (0.00050)	±6	±15	+6/–2	+1/–10
Over 13 to 25 (over 0.0005 to 0.0010), incl	±3	±10	+6/–2	+1/–6
Over 25 to 51 (over 0.0010 to 0.0020)	±3	±6	+3/–0.5	+1/–4

that would interfere with functional performance of the wire. The seller and the purchaser must agree upon acceptable standard of surface cleanliness.

7.3 The surface shall be free of surface contamination that would degrade service life of the device to which it is attached. The seller and the purchaser must agree upon acceptable standard of surface cleanliness.

7.4 The wire surface shall be free of nicks, dents, scratches, or other blemishes deeper than 5 % of the wire diameter. The surface shall be free of flaws protruding more than 5 % of the wire diameter above the surface.

7.5 The wire shall despool without excessive curl that would degrade functional performance. The seller and the purchaser must agree upon acceptable amount of curl. Curl is measured by the springback test (9.5).

7.6 The wire must be free of twist about the wire axis. Referring to wire twist test procedure (9.6), wire entwining upon itself one or more complete turns (9.6.5.4) is rejectable by the purchaser. Lesser degrees of twist may be acceptable, as agreed upon between seller and purchaser.

7.7 The wire cross section must not be out-of-round to such an extent that functional performance is impaired. The seller and the purchaser must agree upon acceptable amount of out-of-roundness.

NOTE 4—It is the intention of the directly responsible Subcommittee, F01.07, that the term "functional performance" be narrowly construed as follows: wire imperfections denoted in 7.2, 7.5, and 7.7 must not be of sufficient severity to excessively impair the operation of an otherwise normally functioning wire bonding machine. In practice, standards of adequate "functional performance" vary considerably, depending upon application.

8. Sampling

8.1 Unless otherwise agreed, conformance with Section 5 shall be determined by samples from each lot of wire.

8.2 *Lot Sampling*—A lot shall consist of all material from one melt or bar in a shipment against one order description.

8.3 *Sampling Plan:*

8.3.1 A spool of wire used for testing may not be useful for production. Choose a sampling plan that will permit scrapping of test spools as gold wire, particularly of small diameter, is easily damaged.

8.3.2 Select the number of spools that will give a representative sampling, as agreed upon between the purchaser and the seller.

8.4 *Number of Samples:*

8.4.1 Take samples from not less than 1 % of the spools from each lot.

8.4.2 Take not less than three samples from each spool.

9. Test Methods

9.1 *Chemical Requirements*—Perform chemical analysis using an emission spectrograph or other method having equivalent sensitivity. Cross-check individual constituents (for example, copper or beryllium) by using atomic absorption spectrometric or other appropriate quantitative analytical method. The seller and the purchaser must agree upon analytical techniques to be employed.

9.2 *Breaking Load and Elongation*—Apply the tension test in accordance with Test Methods F219.

9.3 *Wire Diameter*—Measure the wire diameter by one of the following methods:

9.3.1 Measure the diameter directly with apparatus and procedure in accordance with Test Methods E16. Because annealed gold wire is very soft, exercise caution when using the direct-measurement method to prevent deformation of the wire.

9.3.2 Measure the wire diameter indirectly by weighing in accordance with Test Method F205.

9.3.2.1 When the weight determination method is used, the following values shall be employed: gold density—19.34 g/cm^3; weight of a 200-mm length of wire of 25.4-µm (0.00100-in.) diameter—1.96 mg.

9.3.2.2 *Calculation of Diameter from Weight*—When gold wire is weighed in 200-mm lengths, calculate the diameter as follows:

$$D\,(\mu\text{m}) = \sqrt{(W/1.96)} \times 25.4$$

$$D\,(\text{in}) = \sqrt{(W/1.96)} \times 0.001$$

where:

D = diameter, and
W = mass, mg/200 mm.

9.4 *Finish:*

9.4.1 *Visual Examination*—Perform visual examination using an optical binocular microscope in accordance with Practice F584.

9.4.2 Use a scanning electron microscope to determine the depth of surface blemishes.

9.5 *Wire Curl Test:*

9.5.1 This test should be regarded as destructive. After the wire is despooled to perform the test, the remainder of the wire on the spool will generally be too disturbed for use.

9.5.2 Test must be performed in a well-lighted work area free of air drafts.

9.5.3 *Equipment*—A fixture capable of supporting wire spool with its axis horizontal, and that permits the spool to rotate freely about its axis; metre stick; fine tweezers suitable for holding wire end (see Fig. 1).

9.5.4 Arrange the equipment as indicated schematically in Fig. 1. Refer to Fig. 1 in performing the steps that follow.

9.5.5 *Procedure:*

9.5.5.1 Mount spool on fixture.

9.5.5.2 Using the tweezers, break the "starting end" wire end from its securing tab (Section 11). Gently pull the wire end, thus rotating the spool and dereeling the wire. Pulling force must not exceed 30 % of the wire breaking load. Pull the free wire end downward until 100 ± 0.5 cm of wire has been despooled. Use the metre stick as a gage.

9.5.5.3 Release the wire end.

9.5.5.4 Measure the vertical springback of the free wire end, again using the metre stick as a gage.

9.5.5.5 The curl is defined as the springback determined in 9.5.5.4, measured in millimetres.

9.6 *Wire Axial Twist Test:*

9.6.1 This test should be regarded as destructive. After the wire is despooled to perform the test, the remainder of the wire on the spool will generally be too disturbed for use.

9.6.2 Test must be performed in a well-lighted work area free of air drafts.

9.6.3 *Equipment*—A fixture capable of supporting wire spool with its axis horizontal, and that permits the spool to rotate freely about its axis; metre stick; fine tweezers suitable for grasping wire end.

9.6.4 Arrange the equipment as indicated schematically in Fig. 2. Refer to Fig. 2 in performing the steps that follow.

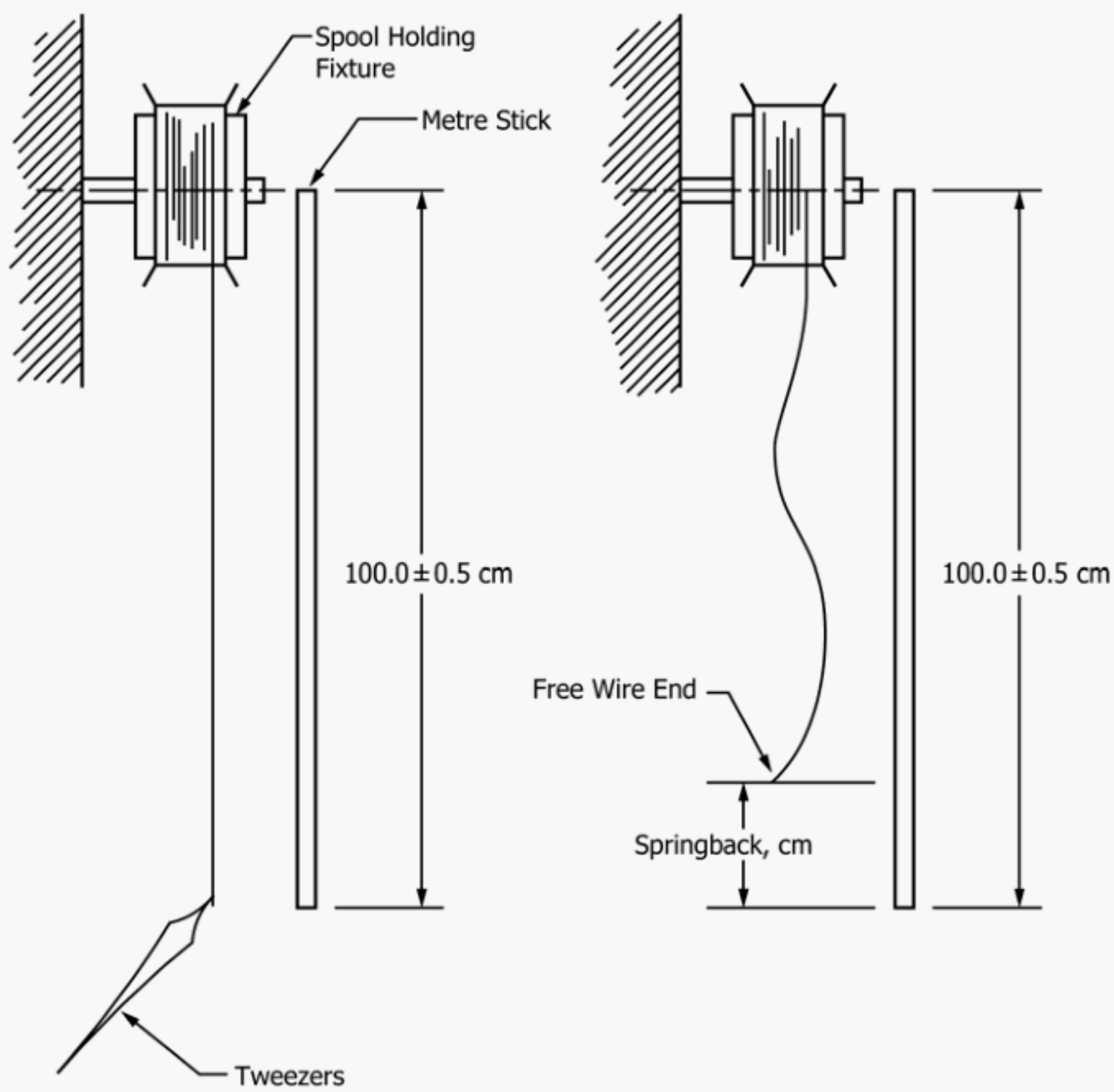

(*a*) 100 cm Wire Dereeled from Spool

(*b*) Free End of Wire Released, Showing Springback

FIG. 1 Test Arrangement, Wire Curl Test

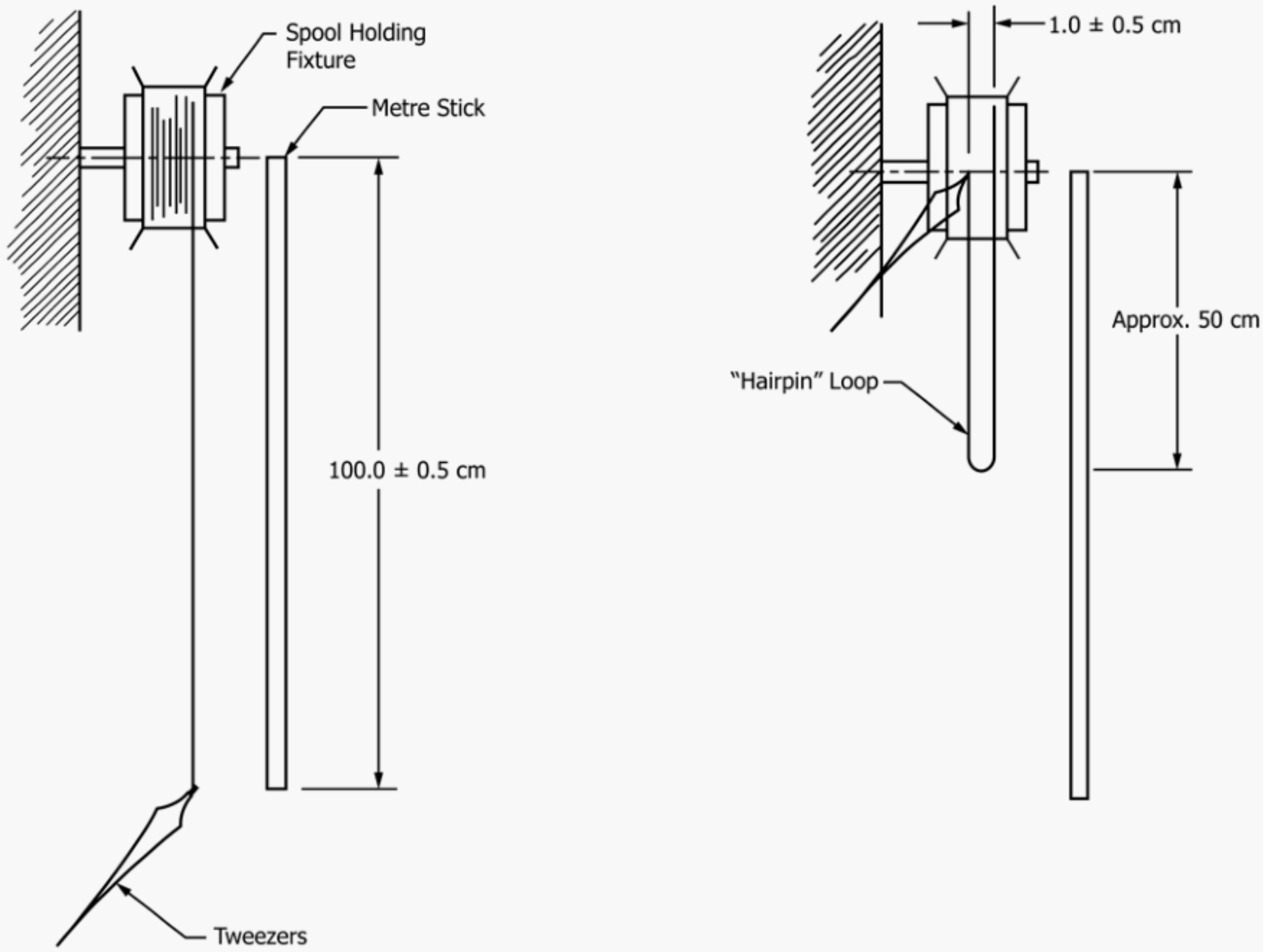

(*a*) 100 cm Wire Dereeled from Spool (*b*) Wire Looped into "Hairpin," Illustrating Wire Free of Axial Twist

FIG. 2 Test Arrangement, Wire Axial Twist Test

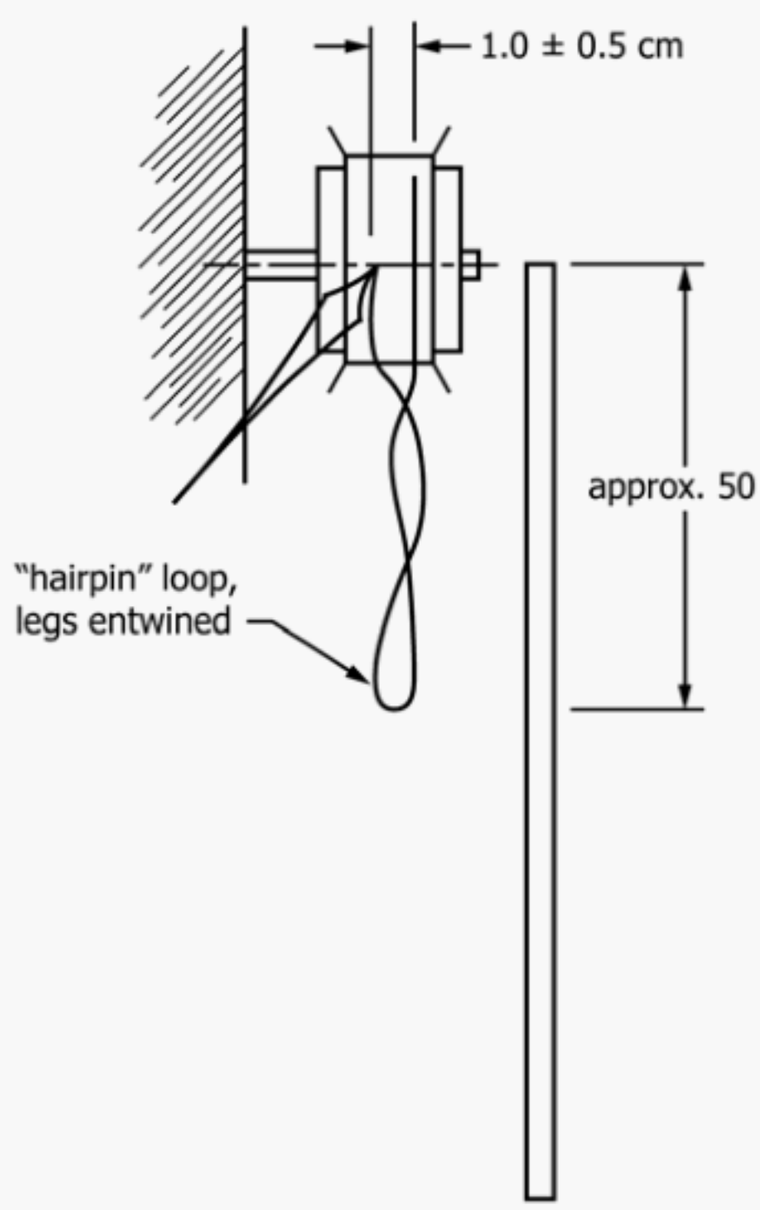

(*c*) Wire Looped into "Hairpin," Illustrating Wire Having Axial Twist

FIG. 2 *Continued*

9.6.5 *Procedure:*

9.6.5.1 Mount spool on fixture.

9.6.5.2 Using the tweezers, break the "starting end" wire end from its securing tab (Section 11). Gently pull the wire end, thus rotating the spool and dereeling the wire. Pulling force must not exceed 30 % of the wire breaking load. Pull the free wire end downward until 100 ± 0.5 cm of wire has been despooled. Use the metre stick as a gauge. (**Warning—**Wire must be unwound from spool; the results of this test are invalid if the wire is despooled "over the flange." Likewise, operator must not rotate tweezers in such a way as to induce an axial twist in the wire.)

9.6.5.3 Still grasping the wire end with the tweezers, gently lift the free wire end up to the spool forming a vertical "hairpin" loop 50 cm long, with its legs spaced 1 ± 5 cm apart. Hold the wire in this position a sufficient length of time to determine whether or not the wire is axially twisted.

9.6.5.4 Interpret the results of the test as follows: axial twist in the wire is indicated by entwining of the "hairpin" legs upon themselves; free hanging of the wire loop is indicative of the absence of axial twist.

9.7 *Wire Roundness Test*—The seller and the purchaser must agree on wire roundness test method. (Test methods for semiconductor lead-bonding wire roundness determination are under development in ASTM Subcommittee F01.07.)

10. Certification

10.1 When agreed upon in writing between the purchaser and the seller, a certification shall be made the basis of acceptance of the material. This shall consist of a copy of the manufacturer's test report or a statement by the seller accompanied by a copy of the test results that the material has been sampled, tested, and inspected in accordance with the provisions of this specification. Each certification so furnished shall be signed by an authorized agent of the seller or the manufacturer.

11. Spooling

11.1 The wire shall be coiled multilayered as illustrated in Fig. 3.

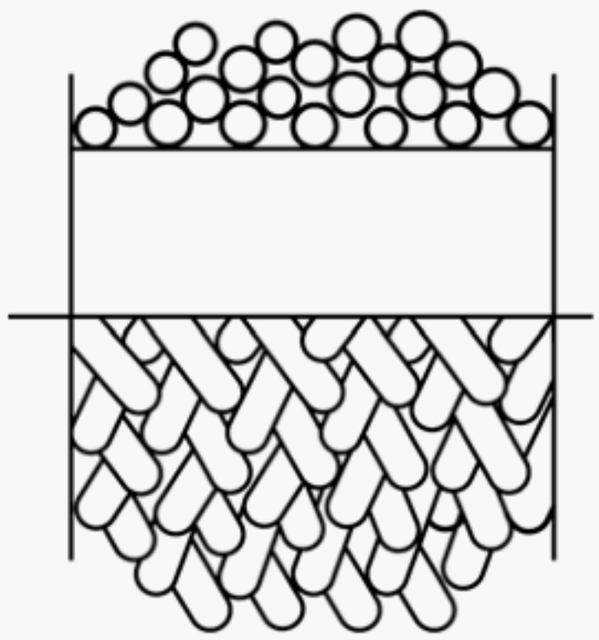

NOTE 1—In the illustration, the upper half of the spool depicts the cross-sectioned wire and the lower half depicts the wire as it appears wound on the spool.

FIG. 3 Spool Winding Option (Multilayer, Cross-Wound)

11.2 The wire shall be coiled on standard spools illustrated in Fig. 4, Fig. 5, Fig. 6, Fig. 7 and Table 9, as agreed upon between purchaser and seller.

11.3 The maximum and minimum length of wire on a spool shall be as specified by the purchaser.

11.4 The wire shall be wound so that it despools freely and shall be free of kinks and nicks.

11.5 The beginning and end of the wind shall be clearly identified. The wire ends shall be secured with colored lacquer or adhesive; the starting end of unwind and the finish of unwind shall be clearly indicated on the package label.

11.6 Wire despooling is designated as either left-handed or right-handed unwind. Handedness of unwind shall be as specified by the purchaser.

11.6.1 The following procedure shall be used for determining the handedness of wire unwind:

11.6.1.1 This examination is intended to be nondestructive. Exercise extreme care in handling spools to prevent accidental wire damage. Do not detach the wire "starting end of unwind" from the spool in performing this test.

11.6.1.2 The test arrangement is illustrated schematically in Fig. 7. Refer to this figure in performing the steps that follow.

11.6.1.3 Select the spool to be tested. Hold the spool in one hand, or mount it on an appropriate fixture, so that the wire wrap is viewed at a comfortable distance at approximately eye level. Set the spool axis horizontal and perpendicular to the line of sight. Continue to use this viewing perspective in the steps which follow:

11.6.1.4 Orient the spool so that the wire's "starting end of unwind" (11.5) points toward the operator from the top of the spool barrel.

11.6.1.5 Determine whether unwind would proceed from left to right, or conversely, from right to left across the spool barrel where the wire is to be despooled.

11.6.2 *Left-Handed Unwind*—If despooling determined in 11.6.1.5 is from left to right the coiling is designated "left-handed unwind."

11.6.3 *Right-Handed Unwind*—If despooling determined in 11.6.1.5 is from right to left, the coiling is designated "right-handed unwind."

12. Packaging and Package Marking

12.1 Wire shall be protected against damage in normal handling and shipping, and the outer container shall bear markings indicating "fragile" contents, designating proper end to be "up" in order to maintain spool axes horizontal during shipping, and indicate that extremes of temperature must be avoided.

12.2 The inner protective packages, enclosing individual spools, shall bear labels legibly carrying the following information:

12.2.1 Material description (beryllium- or copper-modified or high strength),

12.2.2 Diameter, µm (or in.),

12.2.3 Length of wire contained in package, m (or ft),

12.2.4 Breaking load and percent elongation,

12.2.5 Melt, bar, or lot number,

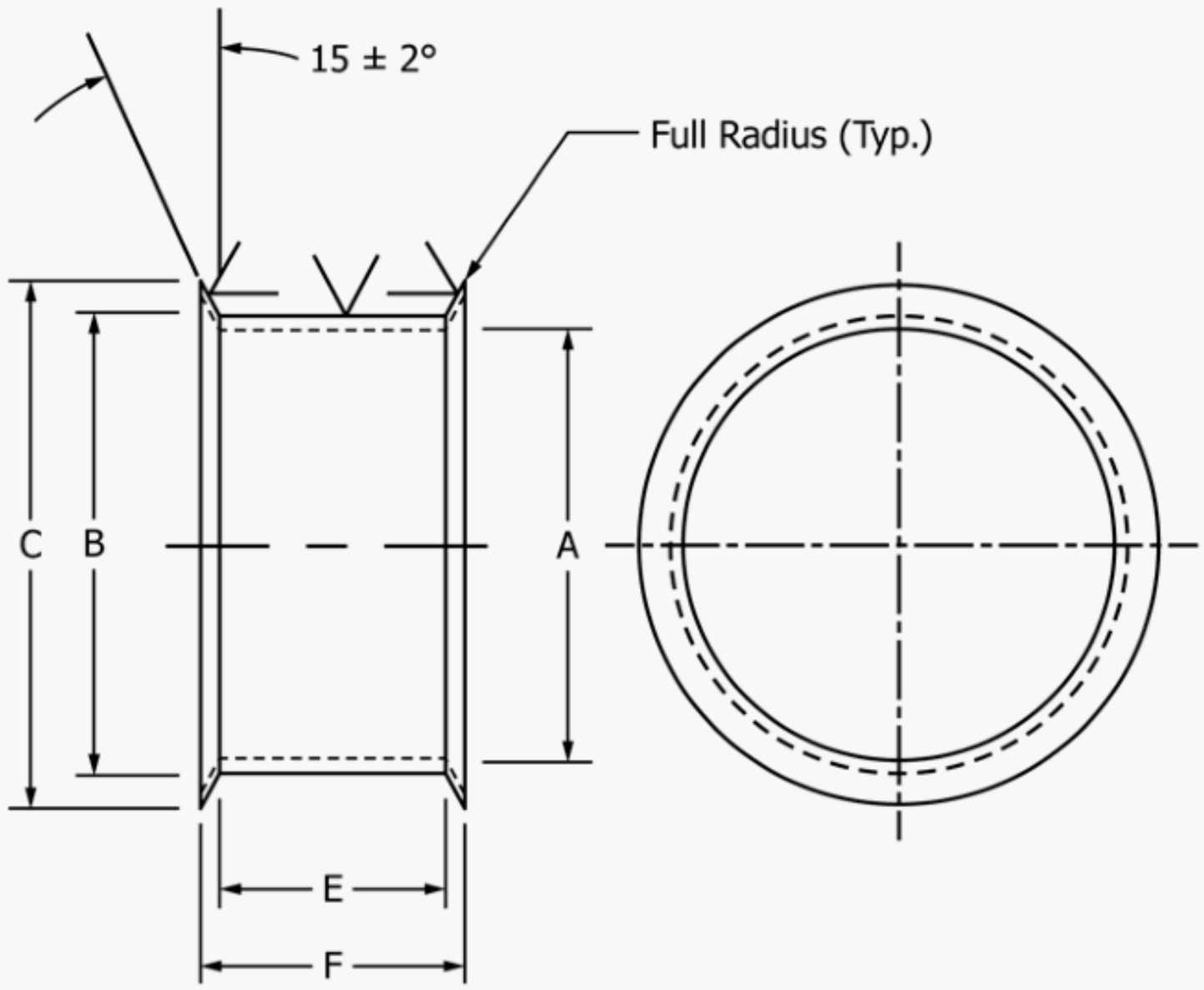

NOTE 1—See Table 9.
NOTE 2—Material—Aluminum.
NOTE 3—Finish—Matte, anodized.
NOTE 4—Break all edges.
NOTE 5—Surfaces marked must be free of scratches, nicks, and other blemishes that would damage wire or hinder despooling.

FIG. 4 5-cm (2-in.) Diameter by 2.5-cm (1-in.) Wide Double-Flange Wire Spool

12.2.6 Date of packaging,

12.2.7 Indication of starting end of wire unwind,

12.2.8 User's part number, or purchase order number if no part number is designated on purchase contract, and

12.2.9 Manufacturer's name.

12.3 Special packaging and marking shall be agreed upon between the purchaser and the seller.

12.4 The wire spools may be colored, or color-coded paint dots or stickers may be attached to the spools, in order to designate the wire diameter. Any color code specification shall be agreed upon between the purchaser and the seller.

NOTE 5—To encourage color code uniformity, the following diameter code is recommended:

Nominal Diameter, µm (in.)	Color
13 (0.00050)	white
18 (0.00070)	red
20 (0.00080)	purple
23 (0.00090)	brown
25 (0.0010)	green
28 (0.0011)	black
30 (0.0012)	gray
31.8 (0.00125)	blue
33 (0.0013)	yellow
38 (0.0015)	orange
51 (0.0020)	pink

12.4.1 Diameter color coding shall be separate from wire termination "start" and "end" color coding and shall not interfere with free despooling of wire.

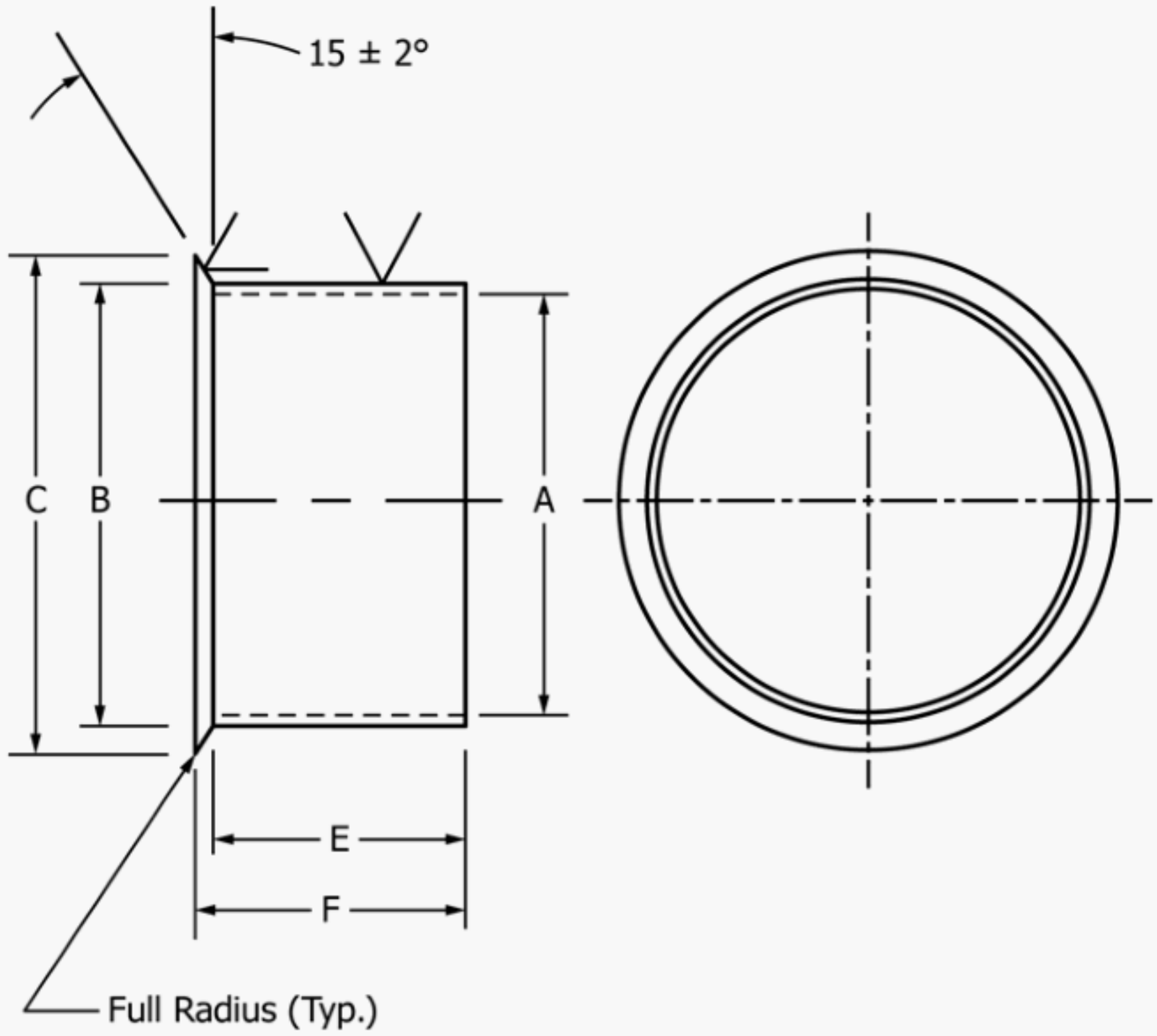

NOTE 1—See Table 9.
NOTE 2—Material—Aluminum.
NOTE 3—Finish—Matte, anodized.
NOTE 4—Break all edges.
NOTE 5—Surfaces marked must be free of scratches, nicks, and other blemishes that would damage wire or hinder despooling.

FIG. 5 5-cm (2-in.) Diameter Single-Flange Wire Spool

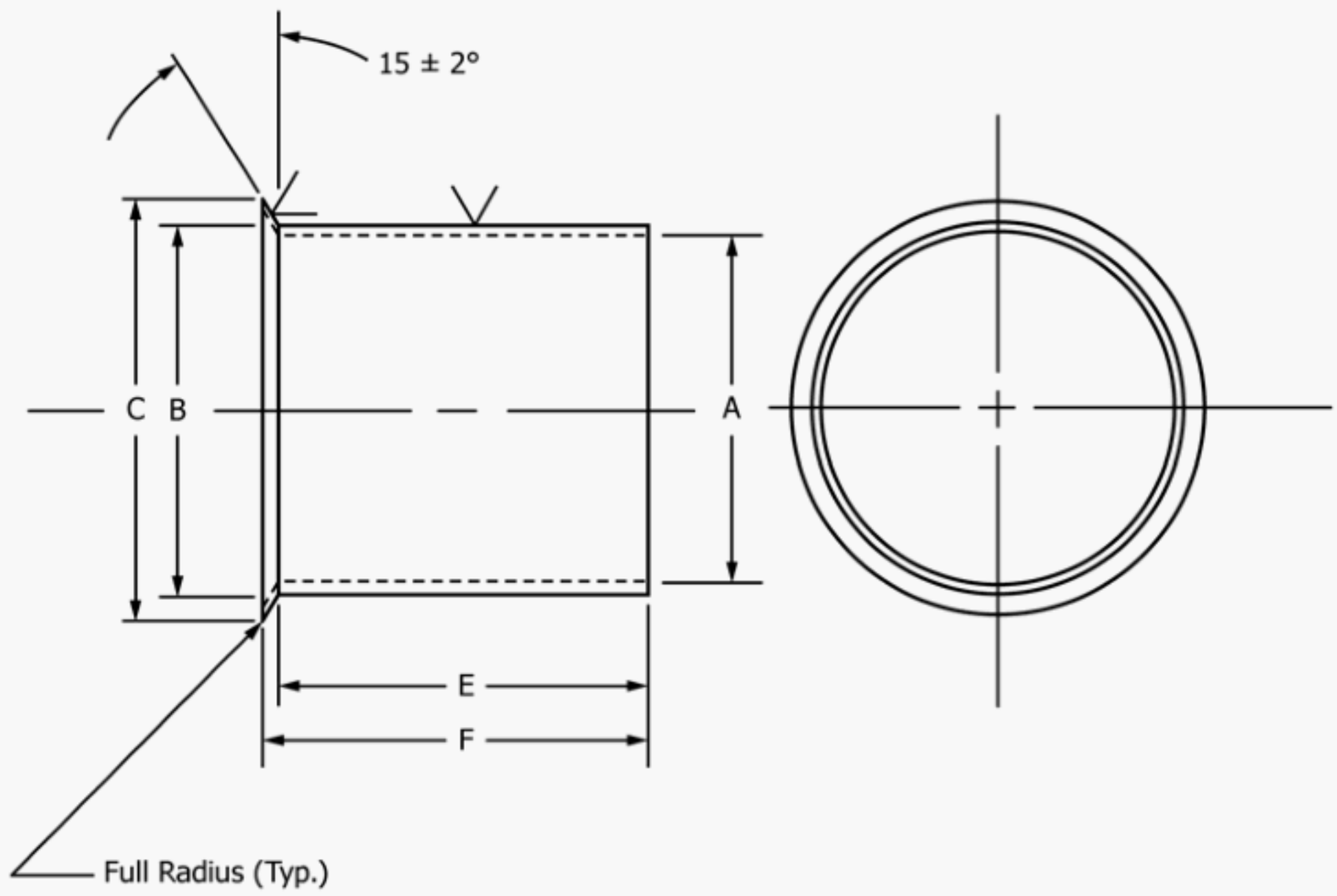

NOTE 1—See Table 9.
NOTE 2—Material—Aluminum.
NOTE 3—Finish—Matte, anodized.
NOTE 4—Break all edges.
NOTE 5—Surfaces marked must be free of scratches, nicks, and other blemishes that would damage wire or hinder despooling.

FIG. 6 5-cm (2-in.) Diameter by 5-cm (2-in.) Wide Single-Flange Wire Spool

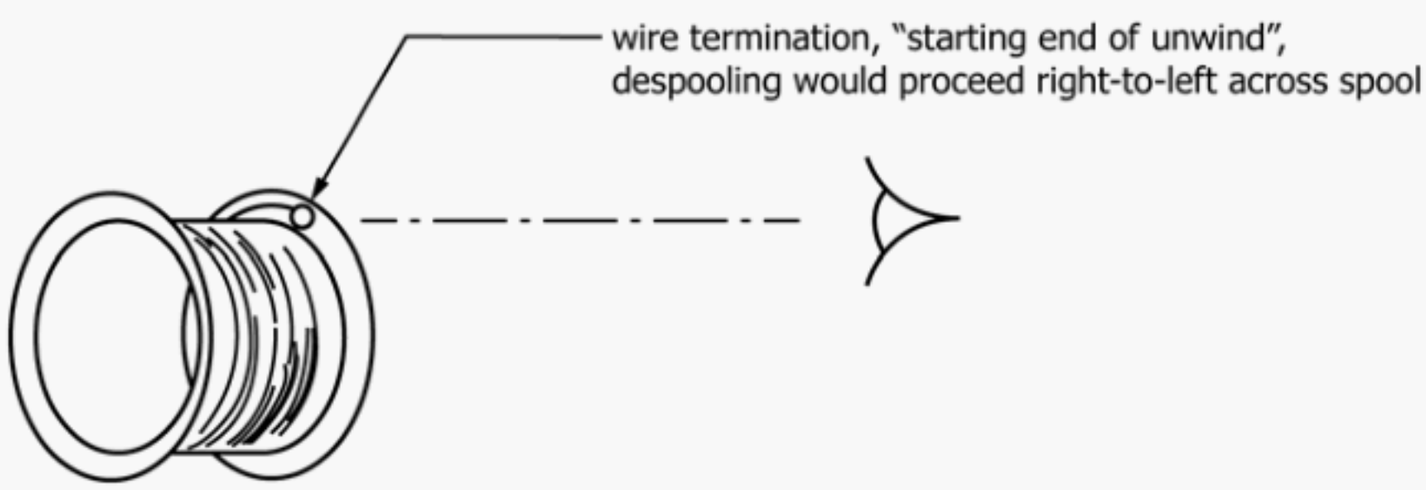

(*a*) Spool Examination, Illustrating Right-Handed Unwind

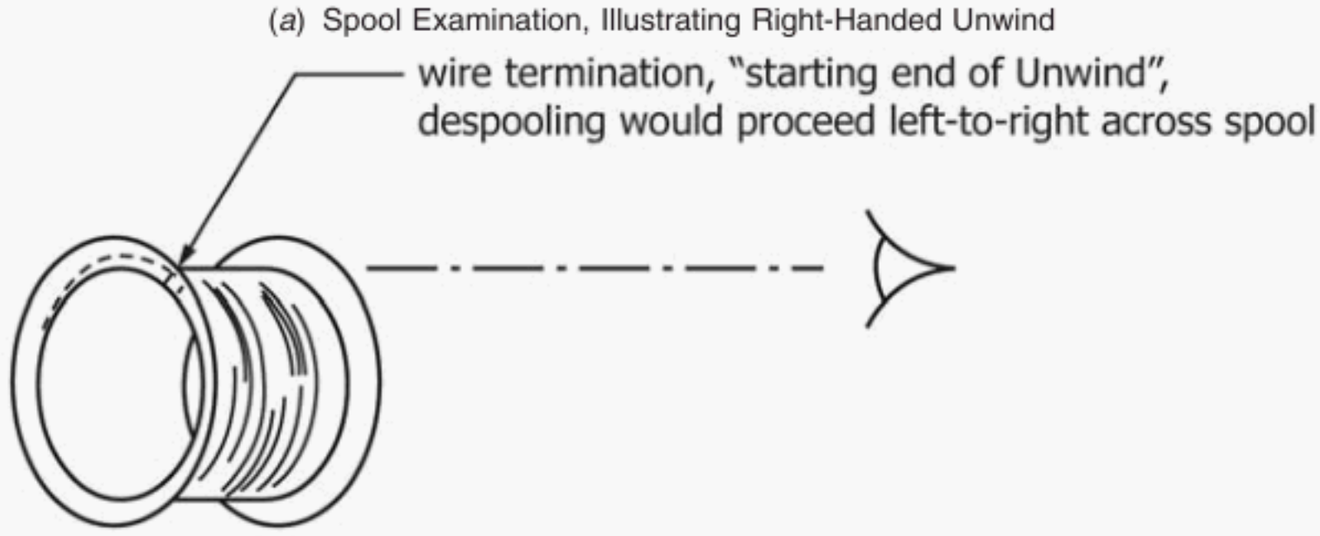

(*b*) Spool Examination, Illustrating Left-Handed Unwind

FIG. 7 Test Arrangement, Determination of Handedness of Wire Unwind

TABLE 9 Spool Dimensions

Spool Type	Figure	A Inside Diameter, mm (in.)	B Barrel Diameter, nominal, mm (in.)	C Flange Diameter, mm (in.)	E Barrel Width, mm (in.)	F Flange Width, reference, mm (in.)
F72/B	7	12.7 ± 0.13 (0.500 ± 0.005)	13.5 (0.530)	17.4 ± 0.3 (0.687 ± 0.010)	18.3 ± 0.3 (0.720 ± 0.010)	19.1 (0.750)
		49.02 + 0.51 – 0.00	50.3	56.90 ± 0.25	25.40 ± 0.13	28.19
F72/G	5	1.930 + 0.020 – 0.000	(1.98)	(2.240 ± 0.010)	(1.000 ± 0.005)	(1.110)
		48.31 + 0.01 – 0.00	50.3	57.15 ± 0.25	25.40 ± 0.13	28.83
F72/H	5	1.902 + 0.005 – 0.000	(1.98)	(2.250 ± 0.010)	(1.000 ± 0.005)	(1.135)
		49.02 + 0.51 – 0.00	50.3	56.90 ± 0.25	27.76 + 0.13 – 0.00	28.19
F72/I	6	1.930 + 0.020 – 0.000	(1.98)	(2.240 ± 0.010)	1.093 + 0.005 – 0.000	(1.155)
		49.02 + 0.51 – 0.00	50.3	56.90 ± 0.25	50.80 ± 0.26	53.59
F72/J	8	1.930 + 0.020 – 0.000	(1.98)	(2.240 ± 0.010)	(2.000 ± 0.010)	(2.110)
F72/K	9	100.48 ± 0.25 (3.956 ± 0.010)	101.6 (4.00)	111.25 ± 0.51 (4.380 ± 0.020)	67.31 ± 0.25 (2.650 ± 0.010)	80.01 (3.15)
		49.02 + 0.51 – 0.00	50.3	56.90 ± 0.25	50.80 ± 0.26	53.59
F72/L	10	1.93 + 0.020 – 0.000	(1.98)	(2.240 ± 0.010)	(2.000 ± 0.010)	(2.110)
F72/M	9	100.48 ± 0.25 (3.956 ± 0.010)	101.6 (4.00)	111.25 ± 0.51 (4.380 ± 0.020)	76.2 ± 0.25 (3.00 ± 0.010)	80.01 (3.15)

APPENDIX

(Nonmandatory Information)

X1. SHELF LIFE AGING TEST 1983–1985

X1.1 Purpose

X1.1.1 To determine the effect of room temperature aging on the stress-strain characteristics of bonding wires of several compositions and tempers. (See Fig. X1.1.)

X1.2 Test Parameters

X1.2.1 *Environment*—Typical stock room, 73°F, ±3°.

X1.2.2 *Spooling*—2-in. diameter, Aluminum, 100 ft/spool.

X1.2.3 *Instrument*—Instron type, 1 in./min, 10 in. length.

X1.2.4 *Sampling*—Average of five readings per notation.

X1.2.5 *Time*—Intervals shown on charts.

X1.2.6 *Wire Size*—All specimens, 0.001 in. diameter.

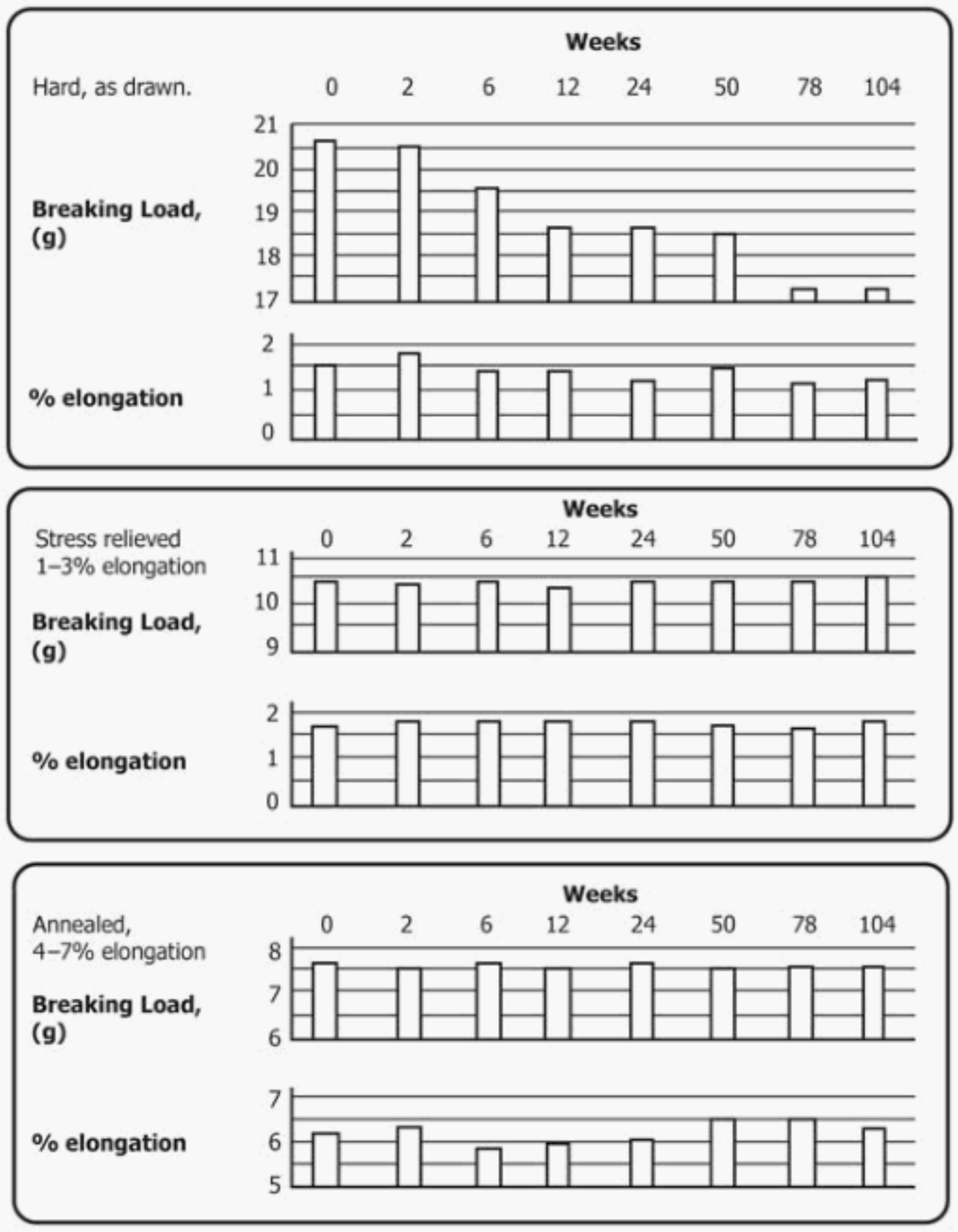

NOTE 1—Although not exactly correct with modern additives, Chart 1 is indicative of Be and Be + Ca doped wires in the 99.99 % Au concentration available today. No data is available for 99.9 and 99 % Au wires made for special purposes, but they should be as long lived as in this figure and probably better.

FIG. X1.1 Chart 1 99.99 % Gold + Beryllium

ASTM International takes no position respecting the validity of any patent rights asserted in connection with any item mentioned in this standard. Users of this standard are expressly advised that determination of the validity of any such patent rights, and the risk of infringement of such rights, are entirely their own responsibility.

This standard is subject to revision at any time by the responsible technical committee and must be reviewed every five years and if not revised, either reapproved or withdrawn. Your comments are invited either for revision of this standard or for additional standards and should be addressed to ASTM International Headquarters. Your comments will receive careful consideration at a meeting of the responsible technical committee, which you may attend. If you feel that your comments have not received a fair hearing you should make your views known to the ASTM Committee on Standards, at the address shown below.

This standard is copyrighted by ASTM International, 100 Barr Harbor Drive, PO Box C700, West Conshohocken, PA 19428-2959, United States. Individual reprints (single or multiple copies) of this standard may be obtained by contacting ASTM at the above address or at 610-832-9585 (phone), 610-832-9555 (fax), or service@astm.org (e-mail); or through the ASTM website (www.astm.org). Permission rights to photocopy the standard may also be secured from the Copyright Clearance Center, 222 Rosewood Drive, Danvers, MA 01923, Tel: (978) 646-2600; http://www.copyright.com/